WORK ORDER NO. 1380457

APPROPRIATION: MILCON

P224 CENTRAL HEATING PLANT B152 NATURAL GAS CONVERSION

At

MCAS CHERRY POINT – HAVELOCK, NORTH CAROLINA

SPECIFICATIONS PREPARED BY:

Jacobs
1100 N. Glebe Rd, Ste 500
Arlington, VA 22201
(A/E Contract N40085-12-D-1703)

PREPARED BY:

Mechanical:	Herb Tull, PE Jacobs
Electrical:	Brian Mitarotonda, PE Jacobs
Structural:	James Loper, PE Jacobs
Civil:	Daniel Hayes, PE Jacobs
Fire Protection:	James Beals, PE Jacobs
Architecture	Jaret Steinagle, Jacobs

Michele M. Holland, PE — Michele M. Holland — December 15, 2016

Submitted By: Jacobs — Signature — Date

Brian Abbott — Digitally signed by ABBOTT.BRIAN.G.1229521450 DN: c=US, o=U.S. Government, ou=DoD, ou=PKI, ou=USN, cn=ABBOTT.BRIAN.G.1229521450 Date: 2016.12.22 09:41:49 -05'00'

Specs Accepted by CI Team Lead/PMEB — Signature — Date

Design Manager — Signature — Date

THIS PAGE HAS BEEN INTENTIONALLY LEFT BLANK

PROJECT TABLE OF CONTENTS

DIVISION 01 - GENERAL REQUIREMENTS

01 11 00 SUMMARY OF WORK
01 14 00 WORK RESTRICTIONS
01 20 00.00 20 PRICE AND PAYMENT PROCEDURES
01 30 00 ADMINISTRATIVE REQUIREMENTS
01 32 17.00 20 NETWORK ANALYSIS SCHEDULES (NAS)
01 33 00 SUBMITTAL PROCEDURES
01 35 26 GOVERNMENTAL SAFETY REQUIREMENTS
01 42 00 SOURCES FOR REFERENCE PUBLICATIONS
01 45 00.00 20 QUALITY CONTROL
01 50 00 TEMPORARY CONSTRUCTION FACILITIES AND CONTROLS
01 57 19.01 20 SUPPLEMENTAL TEMPORARY ENVIRONMENTAL CONTROLS
01 57 19 TEMPORARY ENVIRONMENTAL CONTROLS
01 58 00 PROJECT IDENTIFICATION
01 60 00.00 22 REQUIREMENTS FOR PESTICIDE AND HERBICIDE COORDINATION
01 74 19 CONSTRUCTION AND DEMOLITION WASTE MANAGEMENT
01 78 00 CLOSEOUT SUBMITTALS
01 78 23 OPERATION AND MAINTENANCE DATA
01 78 24.00 20 FACILITY ELECTRONIC OPERATION AND MAINTENANCE SUPPORT INFORMATION (eOMSI)
01 78 30.00 22 GIS DATA DELIVERABLES
01 91 13.00 22 GENERAL COMMISSIONING REQUIREMENTS FOR CONSTRUCTION

DIVISION 02 - EXISTING CONDITIONS

02 41 00 DEMOLITION
02 82 16.00 20 ENGINEERING CONTROL OF ASBESTOS CONTAINING MATERIALS
02 82 33.13 20 REMOVAL/CONTROL AND DISPOSAL OF PAINT WITH LEAD

DIVISION 03 - CONCRETE

03 30 00 CAST-IN-PLACE CONCRETE

DIVISION 04 - MASONRY

04 20 00 UNIT MASONRY

DIVISION 05 - METALS

05 12 00 STRUCTURAL STEEL
05 50 13 MISCELLANEOUS METAL FABRICATIONS
05 52 00 METAL RAILINGS

DIVISION 07 - THERMAL AND MOISTURE PROTECTION

07 41 13 METAL ROOF PANELS
07 84 00 FIRESTOPPING
07 92 00 JOINT SEALANTS

DIVISION 09 - FINISHES

09 90 00 PAINTS AND COATINGS

DIVISION 23 - HEATING, VENTILATING, AND AIR CONDITIONING

23 03 00.00 20 BASIC MECHANICAL MATERIALS AND METHODS

23 07 00 THERMAL INSULATION FOR MECHANICAL SYSTEMS
23 08 00.00 22 COMMISSIONING OF HVAC SYSTEMS
23 09 13 INSTRUMENTATION AND CONTROL DEVICES FOR HVAC
23 09 93.13 SEQUENCES OF OPERATION FOR BOILER CONTROL
23 31 13.00 40 METAL DUCTS
23 52 33.03 20 WATER-TUBE BOILERS, OIL/GAS OR OIL

DIVISION 26 - ELECTRICAL

26 00 00.00 20 BASIC ELECTRICAL MATERIALS AND METHODS
26 08 10.00 22 COMMISSIONING OF ELECTRICAL SYSTEMS
26 20 00 INTERIOR DISTRIBUTION SYSTEM
26 24 13 SWITCHBOARDS
26 29 23 VARIABLE FREQUENCY DRIVE SYSTEMS UNDER 600 VOLTS
26 56 00 EXTERIOR LIGHTING

DIVISION 27 - COMMUNICATIONS

27 21 01.00 20 VIDEO INTERCOMMUNICATION SYSTEM

DIVISION 28 - ELECTRONIC SAFETY AND SECURITY

28 31 76.00 22 INTERIOR COMBINATION EMERGENCY COMMUNICATIONS SYSTEMS

DIVISION 31 - EARTHWORK

31 32 11 SOIL SURFACE EROSION CONTROL

DIVISION 32 - EXTERIOR IMPROVEMENTS

32 16 13 CONCRETE SIDEWALKS AND CURBS AND GUTTERS
32 17 23.00 20 PAVEMENT MARKINGS
32 31 13.53 HIGH-SECURITY CHAIN LINK FENCES AND GATES
32 92 23 SODDING

DIVISION 33 - UTILITIES

33 40 00 STORM DRAINAGE UTILITIES
33 51 15 NATURAL-GAS / LIQUID PETROLEUM GAS DISTRIBUTION
33 71 02 UNDERGROUND ELECTRICAL DISTRIBUTION

DIVISION 40 - PROCESS INTEGRATION

40 17 26.00 20 WELDING PRESSURE PIPING
40 95 00 PROCESS CONTROL

-- End of Project Table of Contents --

SECTION 00 01 07

SEALS PAGE
10/16

CIVIL ENGINEER: Robert
A. Crowley License
Number 45292 in
The State of Maryland
Expiration Date: 5/21/2016

ARCHITECT:
Stephen Wakeman
License Number ARC102441 in
The District of Columbia
Expiration Date: 4/31/2018

STRUCTURAL ENGINEER:
James Loper
License Number 0402050404 in
The Commonwealth of Virginia
Expiration Date: 03/31/2018

MECHANICAL ENGINEER:
Herb Tull
License Number 11252 in
The State of North Carolina
Expiration Date: 12/31/2016

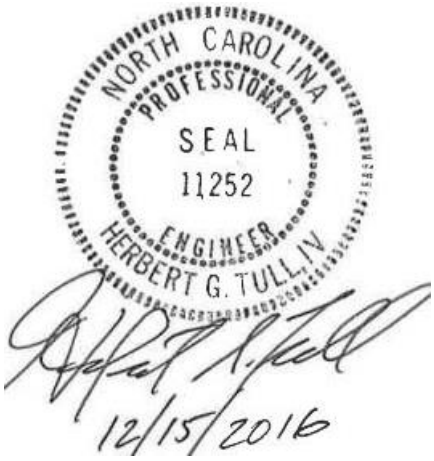

ELECTRICAL ENGINEER:
Brian E. Mitarotonda
License Number 34138 in
The Commonwealth of Virginia
Expiration Date: 1/31/2018

FIRE PROTECTION ENGINEER:
Jeff McLaughlin
License Number 043641 in
The State of North Carolina
Expiration Date: 12/31/2016

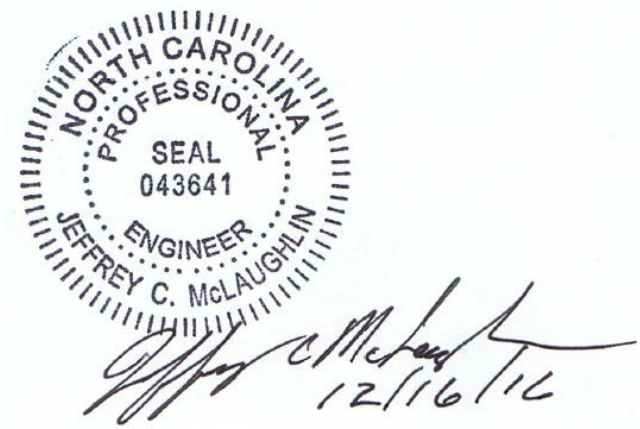

SECTION 01 11 00

SUMMARY OF WORK
07/16

PART 1 GENERAL

1.1 REFERENCES

The publications listed below form a part of this specification to the extent referenced. The publications are referred to within the text by the basic designation only.

INTERNATIONAL CODE COUNCIL (ICC)

ICC IBC (2012) International Building Code

U.S. DEPARTMENT OF DEFENSE (DOD)

UFC 1-200-01 (2013, with Change 3) General Building Requirements

1.2 SUBMITTALS

Government approval is required for submittals with a "G" designation; submittals not having a "G" designation are for Contractor Quality Control approval. Submit the following in accordance with Section 01 33 00 SUBMITTAL PROCEDURES:

SD-01 Preconstruction Submittals

Salvage Plan; G

1.3 WORK COVERED BY CONTRACT DOCUMENTS

1.3.1 Project Description

The Work includes the conversion of two boilers from coal-fired to dual-fired (natural gas and No. 2 fuel oil) and two boilers from fuel-oil fired to dual-fired (natural gas and No. 2 fuel oil) by replacement of burners and ancillary equipment and controls.

a. Base Bid: Base bid scope includes all work associated with burner replacement, including controls, electrical connection and reconnections, and demolition required to facilitate conversion; demolition of electrical circuits; limited site work, including some railroad line removal and limited grading; and installation of security fence and gates.

b. Option 1: Option 1 Scope includes site improvements including demolition of existing sidewalk and side walk additions.

c. Option 2: Option 2 Scope includes demolition of exterior, vertical elements of the coal and ash handling system.

d. Option 3: Option 3 Scope includes demolition of interior elements of the coal and ash handling system.

e. Option 4: Option 4 Scope includes the demolition of exterior, horizontal elements of the coal and ash handling systems; demolition of the remailing railroad; and conversion of the coal yard to a parking lot.

1.3.2 Location

The work is located at Building 152, the Central Heating Plant, as indicated on the Drawings. The exact location will be shown by the Contracting Officer.

1.4 BUILDING CODE

Except as indicated otherwise, or as modified by UFC 1-200-01, use ICC IBC as the building code for this project.

1.5 OCCUPANCY OF PREMISES

Building 152 will be occupied and the plant will be operational during performance of work under this Contract. Occupancy notifications will be posted in a prominent location in the work area.

Before work is started, arrange with the Contracting Officer a sequence of procedure, means of access, space for storage of materials and equipment, and use of approaches, corridors, and stairways.

1.6 EXISTING WORK

In addition to "FAR 52.236-9, Protection of Existing Vegetation, Structures, Equipment, Utilities, and Improvements":

a. Remove or alter existing work in such a manner as to prevent injury or damage to any portions of the existing work which remain.

b. Repair or replace portions of existing work which have been altered during construction operations to match existing or adjoining work, as approved by the Contracting Officer. At the completion of operations, existing work must be in a condition equal to or better than that which existed before new work started.

1.7 LOCATION OF UNDERGROUND UTILITIES

Obtain digging permits prior to start of excavation by contacting the Contracting Officer 15 calendar days in advance., and comply with Installation requirements for locating and marking underground utilities. Contact local utility locating service a minimum of 48 hours prior to excavating, to mark utilities, and within sufficient time required if work occurs on a Monday or after a Holiday. Verify existing utility locations indicated on contract drawings, within area of work.

Verify the elevations of existing piping, utilities,and any type of underground or encased obstruction not indicated, or specified to be removed, that is indicated or discovered during scanning, in locations to be traversed by piping, ducts, and other work to be conducted or installed. Verify elevations before installing new work closer than nearest manhole or other structure at which an adjustment in grade can be made.

1.7.1 Notification Prior to Excavation

Notify the Contracting Officer at least 15 days prior to starting excavation work.

1.8 SALVAGE MATERIAL AND EQUIPMENT

Items designated by the Contracting Officer to be salvaged remain the property of the Government. Segregate, itemize, deliver and off-load the salvaged property at the Government designated storage area located within 5 miles of the construction site.

Provide a salvage plan, listing material and equipment to be salvaged, and their storage location. Maintain property control records for material or equipment designated as salvage. Use a system of property control that is approved by the Contracting Officer. Store and protect salvaged materials and equipment until disposition by the Contracting Officer.

PART 2 PRODUCTS

Not used.

PART 3 EXECUTION

Not used.

-- End of Section --

THIS PAGE HAS BEEN INTENTIONALLY LEFT BLANK

SECTION 01 14 00

WORK RESTRICTIONS
07/16

PART 1 GENERAL

1.1 SUBMITTALS

Government approval is required for submittals with a "G" designation; submittals not having a "G" designation are for Contractor Quality Control approval. Submit the following in accordance with Section 01 33 00 SUBMITTAL PROCEDURES:

SD-01 Preconstruction Submittals

List of Contact Personnel; G

1.2 SPECIAL SCHEDULING REQUIREMENTS

a. Temporary boilers must be ready for operation as approved by Contracting Officer before work is started on the boiler conversion which would interfere with normal operation.

b. Have materials, equipment, and personnel required to perform the work at the site prior to the commencement of the work.

c. The nearby buildings and utilities will remain in operation during the entire construction period. The Contractor must conduct his operations so as to cause the least possible interference with normal operations of the activity.

d. Permission to interrupt any Activity roads, railroads, or utility service must be requested in writing a minimum of 15 calendar days prior to the desired date of interruption.

e. The work under this contract requires special attention to the scheduling and conduct of the work in connection with existing operations. Due to the complexity of this project, the Contractor is required to provide a detailed phasing plan for each portion of the work. This will include a very detailed "critical path" schedule showing phasing. The Contractor will walk through the entire phasing in the plant, item by item (including valves, piping, controls, electrical, instrument air, etc.) with the COTR to demonstrate his understanding of the systems and how the work is to be phased. Identify on the construction schedule each factor which constitutes a potential interruption to operations.

The following conditions apply:

(1) Boilers 1 and 2 must be taken off-line first and can be taken off-line after the natural gas line has been installed and at least two temporary boilers are on line utilizing natural gas and providing primary heat or no later than April 15, 2018. No boiler is to be taken off-line for conversion until such time as all necessary materials for said work are on site.

(2) N+1 redundancy must be maintained at all times.

(3) At no point shall less than two (2) boilers be operational. Temporary boilers will be used to meet this criteria. To meet this criterial, the following capacity must be provided:

(a) Summer (April 15 to October 14): Two boilers (150,000 lbm/hr.) SECTION 01 14 00 Page 1. One boiler will be operational with one redundant boiler.

(b) Winter (October 15 to April 14): Four boilers (305,000 lbm/hr). Three boilers will be operational with one redundant boiler.

(4) Schedule must accommodate yearly inspections of each boiler. Inspections may be coordinated with startup and commissioning; coordinate with plant personnel.

(5) Schedule must accommodate a yearly plant shutdown, typically conducted the first weekend in June.

(6) Natural gas is expected to be available onsite on 15 January 2018. Confirm date with Contracting Officer at time of award.

(7) Schedule may not be set such that boilers providing primary heat at any given time are utilizing fuel oil except that fuel oil may only be utilized as the third boiler and the standby boiler in the Winter or as the standby boiler in the Summer. It is expressly understood that the use of fuel oil will be the last choice of fuels. Once Boilers 1 and 2 have been converted they will become the primary boilers; however, temporary boilers must still be provided as necessary to deliver the above capacity (Summer or Winter) until Boilers 3 and 4 have been converted and placed back online.

(8) Scheduling of tie-in for temporary boilers must be coordinated with plant operations. Ideally, the tie-in will be accomplished during the annual plant shutdown. The tie-in must be done during the Summer season (April-September), on a weekend, and not over a holiday weekend.

(9) Written approval from the Government is required before any outage work can occur and acceptance will not be given until a phasing plan is established, the walk-throughs occur, and both are deemed acceptable. Written acceptance will not be granted until all related submittals are approved and there is assurance that all materials will be on-site when it is their time to be installed. Under no circumstances should work be phased where a system is sitting still with no work being performed without a scheduled reason.

1.3 CONTRACTOR ACCESS AND USE OF PREMISES

1.3.1 Activity Regulations

Ensure that Contractor personnel employed on the Activity become familiar with and obey Activity regulations including safety, fire, traffic and security regulations. Keep within the limits of the work and avenues of ingress and egress. Wear hard hats in designated areas. Do not enter any restricted areas unless required to do so and until cleared for such entry. Mark Contractor equipment for identification.

1.3.1.1 Subcontractors and Personnel Contacts

Provide a list of contact personnel of the Contractor and subcontractors including addresses and telephone numbers for use in the event of an emergency. As changes occur and additional information becomes available, correct and change the information contained in previous lists.

1.3.1.2 Identification Badges and Installation Access

Application for and use of badges will be as directed. Obtain access to the installation by participating in the Navy Commercial Access Control System (NCACS), also referred to as RAPIDGATE, or by obtaining passes each day from the Base Pass and Identification Office. Costs for obtaining passes through the NCACS are the responsibility of the Contractor. One-day passes, issued through the Base Pass and Identification Office, will be furnished without charge. Furnish a completed EMPLOYMENT ELIGIBILITY VERIFICATION (DHS FORM I-9) form for all personnel requesting badges. This form is available at http://www.uscis.gov/portal/site/uscis by searching or selecting Employment Verification (Form I-9). Immediately report instances of lost or stolen badges to the Contracting Officer.

a. NCACS Program: NCACS is a voluntary program in which Contractor personnel who enroll, and are approved, are subsequently granted access to the installation for a period up to one year, or the length of the contract, whichever is less, and are not required to obtain a new pass from the Base Pass and Identification Office for each visit. The Government performs background screening and credentialing. Throughout the year the Contractor employee must continue to meet background screening standards. Periodic background screenings are conducted to verify continued NCACS participation and installation access privileges. Under the NCACS program, no commercial vehicle inspection is required, other than for Random Anti-Terrorism Measures (RAM) or in the case of an elevation of Force Protection Conditions (FPCON). Information on costs and requirements to participate and enroll in NCACS is available at http://www.rapidgate.com or by calling 1-877-727-4342. Contractors should be aware that the costs incurred to obtain NCACS credentials, or costs related to any means of access to a Navy Installation, are not reimbursable. Any time invested, or price(s) paid, for obtaining NCACS credentials will not be compensated in any way or approved as a direct cost of any contract with the Department of the Navy.

b. One-Day Passes: Participation in the NCACS is not mandatory, and if the Contractor chooses to not participate, the Contractor's personnel will have to obtain daily passes, be subject to daily mandatory vehicle inspection, and will have limited access to the installation. The Government will not be responsible for any cost or lost time

associated with obtaining daily passes or added vehicle inspections incurred by non-participants in the NCACS.

1.3.1.3 No Smoking Policy

Smoking is prohibited within and outside of all buildings on installation, except in designated smoking areas. This applies to existing buildings, buildings under construction and buildings under renovation. Discarding tobacco materials other than into designated tobacco receptacles is considered littering and is subject to fines. The Contracting Officer will identify designated smoking areas.

1.3.2 Working Hours

Regular working hours must consist of an 8 1/2 hour period established by the Contractor Officer, between 7 a.m. and 3:30 p.m., Monday through Friday, excluding Government holidays.

1.3.3 Work Outside Regular Hours

Work outside regular working hours requires Contracting Officer approval. Make application 15 calendar days prior to such work to allow arrangements to be made by the Government for inspecting the work in progress, giving the specific dates, hours, location, type of work to be performed, contract number and project title. Based on the justification provided, the Contracting Officer may approve work outside regular hours. During periods of darkness, the different parts of the work must be lighted in a manner approved by the Contracting Officer. Make utility cutovers after normal working hours or on Saturdays, Sundays, and Government holidays unless directed otherwise.

1.3.4 Occupied Building

The Contractor shall be working in and around existing buildings which are occupied.

The existing buildings and their contents must be kept secure at all times. Provide temporary closures as required to maintain security as directed by the Contracting Officer.

Provide dust covers or protective enclosures to protect existing work that remains and Government material located in the building during the construction period.

Relocate movable furniture as required to perform the work, protect the furniture, and replace the furniture in its original location upon completion of the work. Leave attached equipment in place, and protect it against damage, or temporarily disconnect, relocate, protect, and reinstall it at the completion of the work.

1.3.5 Utility Cutovers and Interruptions

a. Make utility cutovers and interruptions after normal working hours or on Saturdays, Sundays, and Government holidays. Conform to procedures required paragraph WORK OUTSIDE REGULAR HOURS.

b. Ensure that new utility lines are complete, except for the connection, before interrupting existing service.

c. Interruption to water, sanitary sewer, storm sewer, telephone service, electric service, air conditioning, heating, fire alarm, compressed air, and steam are considered utility cutovers pursuant to the paragraph WORK OUTSIDE REGULAR HOURS.

d. Operation of Station Utilities: The Contractor must not operate nor disturb the setting of control devices in the station utilities system, including water, sewer, electrical, and steam services. The Government will operate the control devices as required for normal conduct of the work. The Contractor must notify the Contracting Officer giving reasonable advance notice when such operation is required.

e. Connection to Existing Sanitary Sewer Line: Provide positive verification that the existing line conveys sanitary sewer; verify line is not incorrectly connected to a storm drain.

1.4 SECURITY REQUIREMENTS

Contract Clause "FAR 52.204-2, Security Requirements and Alternate II," "FAC 5252.236-9301, Special Working Conditions and Entry to Work Area," and the following apply:

1.4.1 Contractor Access to MCAS Cherry Point and Outlying Areas

No employee or representative of the Contractor will be admitted to the work site without an Identification Badge unless specifically authorized admittance to the worksite by the Contracting Officer.

Documentation requirements for granting access to MCAS Cherry Point for commercial and contract and employers and employees. This document is an aid in meeting ASO 5500.14_ requirements and is not a substitute for the order.

a. Provide a list of employees (prime and/or sub-contractor) that require Station access on company letterhead and include the contract number and a copy of the "base access table" outlined in your contract. NOTE: This list should include employee names ONLY. Do NOT include other personally identifiable information (PII) such as Social Security Number, Date of Birth, etc.. Contractors who are hired for a period more than 30 days will be issued a contractor's badge after the conditions outlined in this document are met. The badge must be carried in plain view or readily accessible at all times while on Station. All badges will be issued for a period **NOT TO EXCEED ONE YEAR** regardless of the length of the contract. Upon the expiration of the badge, the company/employee will provide a new 50 state/national criminal records check and LRC prior to being re-badged.

   For any access from 1 day to less than 30 days, employers will provide the same documentation as stated above. In place of a badge a copy of this letter with the worker's name highlighted, stamped with the "Pass & ID" stamp, "Criminal Records Check (CRC) Sighted", and we will also annotate below the stamps the following statement: "Valid until (expiration date) then date and initial it." This document will be issued to each worker and IS their authorization to be aboard the installation. This letter must be carried on their person or readily accessible at all times while on Station.

b. Contractor personnel requesting access to MCAS Cherry Point must

complete and sign the attached Local Records Check (LRC) Form.

c. Contractor personnel requesting access to MCAS Cherry Point can personally deliver the (original) LRC and the national background check to MCAS Pass & ID 2 full work days prior to requiring a badge or you may send the completed LRC (original) form to include the national background check in via **U.S. Mail only** to arrive 2 to 5 days prior to your arrival. Address: Provost Marshal, Attn: Pass & ID Office, Marine Corps Air Station, Cherry Point, NC 28533-0035 or Provost Marshal's Office, Postal Service Center Box 8035, Marine Corps Air Station, Cherry Point, North Carolina 28533-0035. SSN and photo ID will be verified at this time. NOTE: Due to the sensitivity of the personal information contained in the LRC Release, these documents CAN NOT be faxed or e-mailed to MCAS Pass & ID per Air Station Order 5500.14.

In order to get a badge, you must be present, as it is photo badge.

If the vetting process works correctly, we should have your approved paperwork on hand pending your arrival.

d. MCAS Pass & ID will complete the local records check prior to contractor arriving for badging. If negative results are found, the sponsoring company (prime contractor) will be notified. NOTE: LRC's are only valid for 15 days, therefore the contractor must receive their badge within 15 days or they will have to resubmit the paperwork.

e. Individual Contractor Personnel report to Pass & ID for badging according to the following schedule:

LRC & Background Check Submitted:	Earliest Badging Opportunity:
Monday	Thursday
Tuesday	Friday
Wednesday	Monday (the following week)
Thursday	Tuesday (the following week)
Friday	Wednesday (the following week)

f. Individual Contractor Personnel MUST bring the following documents when reporting to Pass & ID for badging:

-Copy of LRC release previously submitted above.
-Picture ID (typically a driver's license).
-Social Security Card or official document listing SSN.
-Birth Certificate or Passport to verify citizenship.
-If NOT US citizen, provide proof of immigration status.
-Copy of 50-State Background Check (must be less than 30-days old).

IMPORTANT NOTE:

FEAD personnel (Construction Managers, Engineering Techs, or Contract Specialists) and FSC personnel (Contract Surveillance Reps) will not receive, process, re-transmit or otherwise handle in any way PII information related to the badging process. Do NOT forward any of this information to FEAD or FSC.

g. All employers/employees must provide a CRC from any Internet investigative service or any other investigative service company that provides a 50 state/national criminal records check and a check of the

Sexual Offenders List. (Local county/state checks are not authorized and will not be accepted.) This records check must be a "complete" check covering the period from at the minimum their 18th birthday to present. The CRC must also have a statement in the records check that this is a "national records check" or the terminology the agency uses to indicate such. Please be sure of what you are requesting. If it is anything less then a national check, it will be rejected. The CRC can not be more than 30 days old at the time it is presented to Pass & ID personnel. CRCs may be obtained from, but not limited to the following sources (*):

1. www.sentrylink.com
2. www.integrascan.com
3. www.criminalwatchdog.com
4. www.intellicorp.net
5. www.castlebranch.com
6. www.peoplescanner.com
7. www.krollbackgroundscreening.com
8. www.backgroundchecks.com
9. www.instantpeoplecheck.com
10. www.americanbackground.com
11. www.lexisnexis.com

Cost of a background check can vary anywhere from $19 to $60 based on the type or amount of services requested. Minimum information required for a background check is the individual's last name, first name, middle name (optional) and date of birth, which must match exactly with your name and DOB on your driver's license or state ID. A social security number verification is also available at an additional cost.

h. In accordance with ASO 5500.14_ (not an all inclusive list), access will be denied if the individual:

1. Is on the National Terrorist Watch List.
2. Is illegally present in the United States.
3. Is currently debarred or banned from military installations.
4. Is a registered sex offender or been convicted of any child abuse or related offense(s).
5. Is a convicted felon within the past 5 years.
6. Convicted of any drug offense within the past 5 years.
7. Is subject to an outstanding warrant or is currently pending trial.
8. Has knowingly submitted a false/fraudulent employment questionnaire.
9. Any reason the Installation Commander deems reasonable for good order & discipline.
10. Individuals convicted of a DUI/DWI within the past year will be allowed aboard but not be permitted to drive.

i. Picture ID from a state or federal agency (i.e., valid driver's license or state identification card).

j. **Social Security Card** or any official document listing the SSN (letter from Social Security Administration listing the SSN, W-2 (tax form), DD-214, pay stub listing complete SSN). An additional source may be through the Internet with E-Verify.

k. Birth certificates and passports are used when necessary to verify citizenship and are never used as a means to verify social security

numbers.

l. If the employee is not a U.S. Citizen, **PROOF OF IMMIGRATION STATUS** must be provided and carried on their person or be readily accessible at all times while on station. Proof must also be provided if an individual is a naturalized U.S. citizen.

m. **Due to recent changes with Privacy laws, please do not include social security numbers in the company letters being sent to this office. Additionally, all criminal record checks must be hand carried by the individual worker or brought in by the supervisor.**

n. As of 19 December 2007 security clearances are no longer valid as a means for requesting access to the installation. All personnel hired as commercial or contractor employees to work for a company aboard the installation will be required to provide a 50 state/national criminal check.

o. The changes in this document are effective as of 29 February 2012.

Note: Until further notice, ID cards and vehicle passes issued to contractors at Camp Lejeune and New River are not valid at Cherry Point without a 50 state/national CRC in their possession at the time they are requesting access at MCAS Cherry Point.

(*) The United States Government and the United States Marine Corps does not endorse nor are they affiliated with any of the screening services mentioned above. We must be able to verify/validate the information contained in the CRC via telephone. If we are unable to validate the CRC the clearance information will not be accepted.

(**) Due to recent developments concerning the screening services of **Criminal CBS** (also DBA **US Criminal Checks, INC**), **Net Detective**, and **ABI (Accurate Background Investigations)**, they are no longer authorized as a means for entry at MCAS Cherry Point.

Questions on these revised procedures should be addressed directly with Pass & ID personnel at CHPT_PASS-ID_OMB@USMC.MIL or 252-466-4683/5921.

1.4.1.1 Motor Vehicle Operation

Ingress and egress of personnel will be subject to the security regulations of the Station.

a. All personnel must be made aware of the base speed limits:

Housing areas 5 mph
Parking areas 10 mph
All other areas 25 mph (unless otherwise posted)

b. Parking is in designed areas only, between two white lines. No parking is permitted in fire lanes, on grass or planted areas, in parking slots reserved for general officers and handicapped personnel.

c. Traffic accidents should be reported immediately to the Station Security Department by calling 252-466-4366.

d. All personnel entering the installation are subject to random vehicle

inspections. The purpose of these inspections is to detect the theft of Government and private property, and to detect weapons, contraband or illegal drugs.

e. Vehicle Passes/Required Information on Privately Owned Vehicles - Advise company employees who desire to use their privately owned vehicles to personally bring the vehicle, vehicle registration, copy of vehicle insurance policy, valid state inspection documentation, and driver's license to the Main Gate Vehicle Pass Office, Building B-250, telephone 252-466-5921.

f. Access to Restricted Areas - Base entry passes allow access to designated areas on the installation only. Entry into off limits areas is prohibited unless the contract requires it.

g. Current Information - Contractors will be responsible for keeping the vehicle and employee lists current, and for securing and returning identification cards belonging to terminated employees to the Contracting Officer.

h. Station Entry/Visitor Passes - Contractor station entry passes will be valid for each entry aboard Marine Corps Air Station, Cherry Point from 6:00 a.m. to 6:00 p.m., Monday through Friday only, unless prior arrangements have been made with the Facilities Engineering and Acquisition Division (FEAD) Cherry Point, and the Provost Marshall Officer (PMO), Marine Corps Air Station, Cherry Point, has been notified. The passes are the property of the station and are to be returned to Visitors Control at the Main (East) Gate upon completion of the contract or termination of employment. Replacement passes must be requested in writing and be accomplished by written authorization from the Contracting Officer. Visitor Passes will be issued from the Main Gate Visitor Pass Office, Building B-250, telephone 252-466-3330.

i. Providing Information to Subcontractors - Prime Contractors are responsible for ensuring that subcontractors receive security information. Failure to comply with the specified requirements will result in prime contractors and subcontractors being denied access to the construction site.

1.4.1.2 Security Of Contractor-Owned Equipment And Materials

The Contractor is responsible for control and security of Contractor-owned equipment and materials at the work site. Report immediately, missing/lost/stolen property to the Station Security Department as each case occurs.

PART 2 PRODUCTS

Not Used

PART 3 EXECUTION

Not Used

-- End of Section --

THIS PAGE HAS BEEN INTENTIONALLY LEFT BLANK

SECTION 01 20 00.00 20

PRICE AND PAYMENT PROCEDURES
09/15

PART 1 GENERAL

1.1 REFERENCES

The publications listed below form a part of this specification to the extent referenced. The publications are referred to within the text by the basic designation only.

U.S. ARMY CORPS OF ENGINEERS (USACE)

EP-1110-1-8 (2009) Construction Equipment Ownership and Operating Expense Schedule

1.2 SUBMITTALS

Government approval is required for submittals with a "G" designation; submittals not having a "G" designation are for Contractor Quality Control approval. The following shall be submitted in accordance with Section 01 33 00 SUBMITTAL PROCEDURES:

SD-01 Preconstruction Submittals

Earned Value Report; G

1.3 EARNED VALUE REPORT

1.3.1 Data Required

This contract requires the use of a cost-loaded Network Analysis Schedule (NAS). The information required for the Schedule of Prices will be entered as an integral part of the Network Analysis Schedule. Within 15 calendar days of notice of award, prepare and deliver to the Contracting Officer an Earned Value Report (construction contract) as directed by the Contracting Officer. Provide a detailed breakdown of the contract price, giving quantities for each of the various kinds of work, unit prices, and extended prices. Costs shall be summarized and totals provided for each construction category.

1.3.2 Schedule Instructions

Payments will not be made until the Earned Value Report from the cost-loaded NAS has been submitted to and accepted by the Contracting Officer. Identify the cost for site work, and include incidental work to the 5 ft line. Identify costs for the building(s), and include work out to the 5 ft line. Work out to the 5 ft line shall include construction encompassed within a theoretical line 5 ft from the face of exterior walls and shall include attendant construction, such as pad mounted HVAC cooling equipment, cooling towers, and transformers placed beyond the 5 ft line.

1.3.3 Real Property Assets

Real Property Assets apply to work covered by this specification.

Cost data accumulated under this section are required in the preparation of DD Form 1354.

NOTE: Real Property Unique Identifiers (RPUID's) will be provided by the Government but may not be available until later in the project schedule. Coordinate receipt of the RPUID's with the Contracting Officer and the Real Property Accounting Officer. Temporary RPUID's may be required until the actual RPUID's can be provided.

The Government will provide the Draft DD Form 1354, Transfer and Acceptance of Military Real Property filled in with the appropriate construction Category Codes to summarize the designed real property assets that apply to this contract. The Contractor shall meet with the Contracting Officer and the Real Property Accounting Officer during the Pre Construction Meeting and the Project Closeout Meetings to modify and include any necessary changes to the DD Form 1354. The Contractor shall obtain related Real Property Unique Identifiers (RPUID's) from the Real Property Accounting Officer during or following the Pre Construction Meeting. The Contractor shall provide the Interim DD Form 1354 that uses the appropriate division of the RPUID's/ Category Codes to represent the final constructed facility and include all associated cost. Coordinate the Contractor's Price and Payment structure with the structure of the RPUID's/ Category Codes.

Divide detailed asset breakdown into the RPUID's and related construction Category Codes and populate associated costs which represent all aspects of the work. Where assets diverge into multiple RPUID's/ Category Codes, divide the asset and provide the proportion of the assets in each Facility Number/ Category Code. Assets and related RPUID's/ Category Codes may be modified by the Contracting Officer as necessary during course of the work. Coordinate identification and proportion of these assets with the Government Real Property Accounting Officer.

1.4 CONTRACT MODIFICATIONS

In conjunction with the Contract Clause "DFARS 252.236-7000, Modification Proposals-Price Breakdown," and where actual ownership and operating costs of construction equipment cannot be determined from Contractor accounting records, equipment use rates shall be based upon the applicable provisions of the EP-1110-1-8.

1.5 CONTRACTOR'S INVOICE AND CONTRACT PERFORMANCE STATEMENT

1.5.1 Content of Invoice

Requests for payment will be processed in accordance with the Contract Clause FAR 52.232-27, Prompt Payment Construction Contracts and FAR 52.232-5, Payments Under Fixed-Price Construction Contracts. The requests for payment shall include the documents listed below.

a. The Contractor's invoice.

b. The Earned Value Report from the cost-loaded NAS, showing in detail: the estimated cost, percentage of completion, and value of completed performance for each of the construction categories stated in this contract.

c. Updated Project NAS and reports required by the contract.

d. Contractor Safety Self Evaluation Checklist.

e. Other supporting documents as requested.

f. Updated copy of submittal register.

g. Invoices not completed in accordance with contract requirements will be returned to the Contractor for correction of the deficiencies.

h. Affidavit to accompany invoice (LANTDIV NORVA Form 4-4235/4 (Rev.5/81)).

i. Materials on Site.

1.5.2 Submission of Invoices

If NFAS Clause 5252.232-9301 is included in the contract, the listed documents shall be provided as attachments in Wide Area Work Flow (WAWF). The maximum size of each WAWF attachment is two megabytes, but there are no limits on the number of attachments. If a document cannot be attached in WAWF due to system or size restriction it shall be provided as instructed by the Contracting Officer.

Monthly invoices and supporting forms for work performed through the anniversary award date of the contract shall be submitted to the Contracting Officer within 5 calendar days of the date of invoice. For example, contract award date is the 7th of the month, the date of each monthly invoice shall be the 7th and the invoice shall be submitted by the 12th of the month.

1.5.3 Final Invoice

a. A final invoice shall be accompanied by the Contractor's Final Release. If the Contractor is incorporated, the Final Release shall contain the corporate seal. An officer of the corporation shall sign and the corporate secretary shall certify the Final Release.

b. For final invoices being submitted via WAWF, the original Contractor's Final Release Form must be provided directly to the respective Contracting Officer prior to submission of the final invoice. Once receipt of the original Final Release Form has been confirmed by the Contracting Officer, the Contractor shall then submit final invoice and attach a copy of the Final Release Form in WAWF.

c. Final invoices not accompanied by the Contractor's Final Release will be considered incomplete and will be returned to the Contractor.

1.6 PAYMENTS TO THE CONTRACTOR

Payments will be made on submission of itemized requests by the Contractor which comply with the requirements of this section, and will be subject to reduction for overpayments or increase for underpayments made on previous payments to the Contractor.

1.6.1 Obligation of Government Payments

The obligation of the Government to make payments required under the provisions of this contract will, at the discretion of the Contracting Officer, be subject to reductions and/or suspensions permitted under the

FAR and agency regulations including the following in accordance with "FAR 32.503-6:

a. Reasonable deductions due to defects in material or workmanship;

b. Claims which the Government may have against the Contractor under or in connection with this contract;

c. Unless otherwise adjusted, repayment to the Government upon demand for overpayments made to the Contractor; and

d. Failure to provide up to date record drawings not current as stated in Contract Clause "FAC 5252.236-9310, Record Drawings."

1.6.2 Payment for Onsite and Offsite Materials

Progress payments may be made to the contractor for materials delivered on the site, for materials stored off construction sites, or materials that are in transit to the construction sites under the following conditions:

a. FAR 52.232-5(b) Payments Under Fixed Price Construction Contracts.

b. Materials delivered on the site but not installed, including completed preparatory work, and off-site materials to be considered for progress payment shall be major high cost, long lead, special order, or specialty items, not susceptible to deterioration or physical damage in storage or in transit to the construction site. Examples of materials acceptable for payment consideration include, but are not limited to, structural steel, non-magnetic steel, non-magnetic aggregate, equipment, machinery, large pipe and fittings, precast/prestressed concrete products, plastic lumber (e.g., fender piles/curbs), and high-voltage electrical cable. Materials not acceptable for payment include consumable materials such as nails, fasteners, conduits, gypsum board, glass, insulation, and wall coverings.

c. Materials to be considered for progress payment prior to installation shall be specifically and separately identified in the Contractor's estimates of work submitted for the Contracting Officer's approval in accordance with Earned Value Report requirement of this contract. Requests for progress payment consideration for such items shall be supported by documents establishing their value and that the title requirements of the clause at FAR 52.232-5 have been met.

d. Materials are adequately insured and protected from theft and exposure.

e. Provide a written consent from the surety company with each payment request for offsite materials.

f. Materials to be considered for progress payments prior to installation shall be stored in the Continental United States.

PART 2 PRODUCTS

Not Used.

PART 3 EXECUTION

Not Used.

-- End of Section --

THIS PAGE HAS BEEN INTENTIONALLY LEFT BLANK

SECTION 01 30 00

ADMINISTRATIVE REQUIREMENTS
09/15

PART 1 GENERAL

1.1 SUBMITTALS

Government approval is required for submittals with a "G" designation; submittals not having a "G" designation are for Contractor Quality Control approval. The following shall be submitted in accordance with Section 01 33 00 SUBMITTAL PROCEDURES:

SD-01 Preconstruction Submittals

View location map; G
Progress and completion pictures; G

1.2 VIEW LOCATION MAP

Submit to the Contracting Officer, prior to or with the first digital photograph submittals, a sketch or drawing indicating the required photographic locations. Update as required if the locations are moved.

1.3 PROGRESS AND COMPLETION PICTURES

Photographically document site conditions prior to start of construction operations. Provide monthly, and within one month of the completion of work, digital photographs, 1600x1200x24 bit true color minimum resolution in JPEG file format showing the sequence and progress of work. Take a minimum of 20 digital photographs each week throughout the entire project from a minimum of ten views from points located by the Contracting Officer. Submit a view location sketch indicating points of view. Submit with the monthly invoice two sets of digital photographs each set on a separate CD-R, cumulative of all photos to date. Indicate photographs demonstrating environmental procedures. Photographs for each month shall be in a separate monthly directory and each file shall be named to indicate its location on the view location sketch. The view location sketch shall also be provided on the CD as digital file. All file names shall include a date designator. Cross reference submittals in the appropriate daily report. Photographs shall be provided for unrestricted use by the Government.

1.4 MINIMUM INSURANCE REQUIREMENTS

Procure and maintain during the entire period of performance under this contract the following minimum insurance coverage:

a. Comprehensive general liability: $500,000 per occurrence

b. Automobile liability: $200,000 per person, $500,000 per occurrence for bodily injury, $20,000 per occurrence for property damage

c. Workmen's compensation as required by Federal and State workers' compensation and occupational disease laws.

d. Employer's liability coverage of $100,000, except in States where

workers compensation may not be written by private carriers,

e. Others as required by State law.

1.5 CONTRACTOR SPECIAL REQUIREMENTS

1.5.1 Asbestos Containing Material

All contract requirements of Section 02 82 16.00 20 ENGINEERING CONTROL OF ASBESTOS CONTAINING MATERIALS assigned to the Private Qualified Person (PQP) shall be accomplished directly by a first tier subcontractor.

1.5.2 Space Temperature Control, TAB, and Apparatus Inspection

All contract requirements of Section 23 09 13 INSTRUMENTATION AND CONTROL DEVICES FOR HVAC and Section 23 09 93.13 SEQUENCE OF OPERATION FOR BOILER CONTROL shall be accomplished directly by a first tier subcontractor, including the Commissioning Agent. No work required by Section 23 08 13 shall be accomplished by a second tier contractor

1.6 SUPERVISION

Have at least one qualified supervisor capable of reading, writing, and conversing fluently in the English language on the job site during working hours. In addition, if a Quality Control (QC) representative is required on the contract, then that individual shall also have fluent English communication skills.

1.7 PRECONSTRUCTION CONFERENCE

After award of the contract but prior to commencement of any work at the site, meet with the Contracting Officer to discuss and develop a mutual understanding relative to the administration of the value engineering and safety program, preparation of the schedule prices, shop drawings, and other submittals, scheduling programming, prosecution of the work, and clear expectations for the DD Form 1354 submittals. Major subcontractors who will engage in the work shall also attend.

1.8 FACILITY TURNOVER PLANNING MEETINGS (NAVFAC Red Zone - NRZ)

Key personnel will meet to identify strategies to ensure the project is carried to expeditious closure and turnover to the Client. Start the turnover process at the Pre Construction Conference meeting and convene at the Facility Turnover Meetings once the project has reached approximately 75 percent completion or three to six months prior to Beneficial Occupancy Date (BOD), whichever comes first. The Contracting Officer's Representative will lead the meetings and guide discussions based on an agenda provided by the Government. See attached NAVFAC Red Zone Facility Turnover Planning Meeting AGENDA for typical meeting agenda. The facility Turnover effort shall include the following:

a. Pre Construction Meeting - Contracting Officer's Technical Representative (COTR) will provide the Facility Turnover Checklist and the Contractor, Client, and NAVFAC Representatives will compare Contractor's schedule to Facility Turnover Checklist to ensure all Contractor Checklist Items are included in the schedule and to discuss the scheduling impact of Client and NAVFAC Checklist Items.

b. Facility Turnover Meetings

1. Fill in the Facility Turnover Checklist including Contractor, Client, and NAVFAC Checklist Items and assign a person to be responsible for each item and a due date. The Contractor's Representative will facilitate the assignment of responsibilities, fill out the Facility Turnover Checklist, and discuss DD Form 1354 requirements. See attached Facility Turnover Checklist Items.

2. Review the Contractor's updated schedule. The Contractor shall develop a POAM for the completion of all Contractor, Client, and NAVFAC Checklist items.

3. Confirm that all Facility Turnover Checklist items will be completed on time for the scheduled Facility Turnover.

1.8.1 Facility Turnover Meeting Attendees

The following key personnel shall attend the Facility Turnover Meetings: Contractor QC Manager, Superintendent, Major Subcontractors, Designer-of-Record, Contracting Officer's Representative, Representative(s) of NAVFAC, the Facility Owner, and the Client.

1.9 PARTNERING

To most effectively accomplish this contract, the Government requires the formation of a cohesive partnership within the Project Team whose members are from the Government, the Contractor and Subcontractors. Key personnel representing Base Facilities, the Designer of Record (DOR), principal individuals from NAVFAC MIDLANT and from the Facilities Engineering and Acquisition division (FEAD) office, the project sponsor, and representative(s) of the facility user will be invited to participate in the partnering process. Key members of the Contractor and subcontractor teams, including senior management, must participate.

The partnership will draw on the strengths of each organization in an effort to achieve a quality project done right the first time, within budget, on schedule, and without any safety mishaps.

1.9.1 Formal Partnering

Provide and host the Partnering sessions with key personnel of the Project Team, including Contractor personnel and Government personnel. The Contractor shall pay all costs associated with the partnering effort including the Facilitator, the meeting room, and other incidental items. In exception, participants shall bear their own costs for meals, lodging, and transportation associated with the Partnering sessions.

Before a Partnering session, coordinate with the Facilitator all requirements for incidental items (such as audio-visual equipment, easels, flipchart paper, colored markers, note paper, pens/pencils, colored flash cards, etc.), and have these items available at the Partnering session. Provide copies of documents for distribution to all attendees.

The Facilitator shall be experienced in conducting Partnering Workshops, and shall be acceptable to both the Government and the Contractor. The Facilitator is responsible for leading the team in a timely manner and making sure that issues are identified and resolved. A list of Partnering Facilitators is available from the Contracting Officer.

1.9.1.1 Initial Partnering Session

a. Shall be a duration of one day minimum.

b. Will include participants as listed under paragraph "Facility Turnover Meeting Attendees".

c. Should be held at a location off base as agreed to by the partners.

e. May take place with the Preconstruction Conference.

1.9.1.2 Follow-on Partnering Session(s)

a. Shall be held quarterly or as agreed to by the partners.

b. May be held concurrently with other scheduled meetings such as QC or scheduling.

c. May be held at a location off base, the project site, or in government facilities on base.

d. May include only participants required to resolve current issues.

e. Will generally last a half day or less and may utilize electronic means if mutually acceptable to all parties.

f. Will not require a facilitator unless desired by the partners.

1.10 AVAILABILITY OF CADD DRAWING FILES

After award and upon request, the electronic "Computer-Aided Drafting and Design (CADD)" drawing files will only be made available to the Contractor for use in preparation of construction data related to the referenced contract subject to the following terms and conditions. Request specific drawing numbers of files required; the entire set of drawing files will not be provided.

Data contained on these electronic files shall not be used for any purpose other than as a convenience in the preparation of construction data for the referenced project. Any other use or reuse shall be at the sole risk of the Contractor and without liability or legal exposure to the Government. The Contractor shall make no claim and waives to the fullest extent permitted by law, any claim or cause of action of any nature against the Government, its agents or sub consultants that may arise out of or in connection with the use of these electronic files. The Contractor shall, to the fullest extent permitted by law, indemnify and hold the Government harmless against all damages, liabilities or costs, including reasonable attorney's fees and defense costs, arising out of or resulting from the use of these electronic files.

These electronic CADD drawing files are not construction documents. Differences may exist between the CADD files and the corresponding construction documents. The Government makes no representation regarding the accuracy or completeness of the electronic CADD files, nor does it make representation to the compatibility of these files with the Contractors hardware or software. In the event that a conflict arises between the signed and sealed construction documents prepared by the Government and the furnished CADD files, the signed and sealed construction documents shall govern. The Contractor is responsible for

determining if any conflict exists. Use of these CADD files does not relieve the Contractor of duty to fully comply with the contract documents, including and without limitation, the need to check, confirm and coordinate the work of all contractors for the project.

If the Contractor uses, duplicates and/or modifies these electronic CADD files for use in producing construction data related to this contract, all previous indicia of ownership (seals, logos, signatures, initials and dates) shall be removed.

1.11 ELECTRONIC MAIL (E-MAIL) ADDRESS

The Contractor shall establish and maintain electronic mail (e-mail) capability along with the capability to open various electronic attachments in Microsoft, Adobe Acrobat, and other similar formats. Within 10 days after contract award, the Contractor shall provide the Contracting Officer a single (only one) e-mail address for electronic communications from the Contracting Officer related to this contract including, but not limited to contract documents, invoice information, request for proposals, and other correspondence. The Contracting Officer may also use email to notify the Contractor of base access conditions when emergency conditions warrant, such as hurricanes, terrorist threats, etc. Multiple email addresses will not be allowed.

It is the Contractor's responsibility to make timely distribution of all Contracting Officer initiated e-mail with its own organization including field office(s). The Contractor shall promptly notify the Contracting Officer, in writing, of any changes to this email address.

PART 2 PRODUCTS

Not Used.

PART 3 EXECUTION

Not Used.

-- End of Section --

exists. Use of these CADD files does not relieve the Contractor of duty to fully comply with the contract documents, including and without limitation, the need to check, confirm and coordinate the work of all contractors for the project.

If the Contractor uses, duplicates and/or modifies these electronic CADD files for use in producing construction data related to this contract, all previous indicia of ownership (seals, logos, signatures, initials and dates) shall be removed.

1.11 ELECTRONIC MAIL (E-MAIL) ADDRESS

The Contractor shall establish and maintain electronic mail (e-mail) capability along with the capability to open various electronic attachments in Microsoft, Adobe Acrobat, and other similar formats. Within 10 days after contract award, the Contractor shall provide the Contracting Officer a single (only one) e-mail address for electronic communications from the Contracting Officer related to this contract including, but not limited to contract documents, invoice information, request for proposals, and other correspondence. The Contracting Officer may also use email to notify the Contractor of base access conditions when emergency conditions warrant, such as hurricanes, terrorist threats, etc. Multiple email addresses will not be allowed.

It is the Contractor's responsibility to make timely distribution of all Contracting Officer initiated e-mail with its own organization including field office(s). The Contractor shall promptly notify the Contracting Officer, in writing, of any changes to this email address.

PART 2 PRODUCTS

Not Used.

PART 3 EXECUTION

Not Used.

-- End of Section --

UNITED STATES MARINE CORPS

PROVOST MARSHAL'S OFFICE
POSTAL SERVICE CENTER BOX 8035
MARINE CORPS AIR STATION
CHERRY POINT, NORTH CAROLINA 28533-0035

IN REPLY REFER TO:
5512
PMO

From: Pass & Identification Office
To: (1) PMO Records Manager
(2) Criminal Investigation Division Office

Subj: Request for Local Records check for the below named individual.

Ref: ASO 5500.14

Attach: (1) Individual 50 State Criminal History Report
(2) Authorization to Release of Information (back of this page)

1. The following information is provided for pending access aboard MCAS, Cherry Point, NC

FULL NAME: _____

FULL SSN: _____

COMPANY/SPONOR'S NAME: _____

DATE OF BIRTH: _____

CURRENT ADDRESS: _____

CONTACT PHONE NUMBER: _____

SIGNATURE: _____

PMO / CID USE ONLY
Provost Marshal's Office
Date:_____
Time:_____
Results: _____
_____

Name of Processor_____
PMO RECORDS

TLO VERIFIED (DATE/TIME/INITIALS)_____
Provost Marshal's Office
Date:_____
Time:_____
Results:_____
_____

Name of Processor_____
Criminal Investigation Division

INDIVIDUAL CONTACTED (DATE/TIME/INITIALS): _____

☐ APPROVED ☐ DENIED

_____
APPROVAL OFFICIAL SIGNATURE

Authorization for Release of Information

Carefully read this authorization to release information about you, then sign and date it in ink.

I Authorize any investigator, special agent, or other duly accredited representative of the OPM, the Federal Bureau of Investigation, the Department of Defense, the Department of State, and any other authorized Federal agency, to request criminal record information about me from criminal justice agencies for the purpose of determining my eligibility for requesting access to the facilities aboard Marine Corps Air Station Cherry Point N.C.

I Authorize custodians of records and other sources of information pertaining to me to release such information upon request of the investigator, special agent, or other duly accredited representative of any Federal agency authorized above regardless of any previous agreement to the contrary.

I Understand that, for some sources of information, a spearate specific release will be needed, and I may be contacted for such a release at a later date.

I Understand that the information released by records custodians and sources of information is for official use by the Federal Government only for the purpose provided above, and it may be disclosed by the Government only as authorized by law.

<u>Photocopies of this authorization that show my signature are NOT VALID</u>

Signature(sign in ink)	Full Name (First, Middle, Last)	Date Signed (mm/dd/yyyy)
Other Names Used	Date of Birth	Social Security Number
Current Street Address	City, State, Zip Code	Contact Telephone Number

SOIL AUTHORIZATION FORM (SAF)

Based upon Requirements for Off Site Soil (RFOSS)

Project Name: _____

Project Number: _____

Base Contract Officer (e.g. ROICC/FSC): _____

Company Name: _____

Amount of soil required (in cubic yards): _____

--- Check the applicable box below and sign/date in the appropriate section ---

Amount of soil needed for project is:

☐ Up to 200 cubic yards (No analytical data required; Include NC mining permit)

I _____ certify the soil contains *No apparent contamination*
(print name)
as determined by visual or other indications of contamination including abnormal or unnatural color, chemical or petroleum odors, or saturation with a chemical or petroleum.

_____
Signature *Date (mm/dd/yy)*

☐ More than 200 to 1000 cubic yards. (Requires 1 representative sample)

☐ More than 1000 to 3000 cubic yards. (Requires 2 representative samples)

☐ More than 3000 to 5000 cubic yards. (Requires 3 representative samples)

☐ More than 5000 cubic yards. (Requires 4 or more representative samples)

I _____ have enclosed analytical testing data, completed
(print name)
SAF, an NC mining permit as outlined in the RFOSS and followed the guidance for proper sampling to ensure accurate data collection for the soil.

_____
Signature *Date (mm/dd/yy)*

NAVFAC SUSTAINABILITY AND ENERGY DATA --- *NEW CONSTRUCTION & MAJOR RENOVATION*

PROJECT INFORMATION

Work Order No.: _____ FY _____ MILCON P No. / Customer Reference No.: _____

Project Title: _____

Location/UIC: _____

NAVFAC Project Manager: _____ Project Dollar Amount $: _____

Project Type: _____ Project Design Level: _____

Facility Area: _____ U/M: _____ Category Code: _____ Facility #: _____

AE Contract # & T.O. _____ AE Firm Sustainability Coordinator: _____

AE Firm Name: _____

Project Phase: ☐ Solicitation Documents Complete (Draft) ☐ Construction Complete (Final)

Construction Contract & T.O. _____ Award Date (P/A): _____ BOD (P/A): _____

Construction Contractor: _____

Contractor's Sustainability Coordinator: _____

SUSTAINABILITY DATA - GUIDING PRINCIPLES for SUSTAINABLE NEW CONSTRUCTION and MAJOR RENOVATION

Use this form to collect design and as-constructed project information to be recorded on the Sustainable and Energy Tab in eProjects

Provide justification for each target missed:

Sustainability Third Party Rating System: ☐ USGBC LEED ☐ GBI Green Globes ☐ Not Applicable ☐ Other

A Sustainability Certification Level - Target
☐ LEED Silver ☐ 2 Globes ☐ Other

Identify "Other" certification system and target level

B Sustainability Certification Level - Achieved
☐ LEED Certified ☐ LEED Silver ☐ LEED Gold ☐ LEED Platinum ☐ Not Met
☐ 1 Globe ☐ 2 Globes ☐ 3 Globes ☐ 4 Globes ☐ Other

Identify "Other" certification system and level achieved

I. Employ Integrated Design Principles

I.a Integrated Assessment, Operation, and Management ☐ Included ☐ Not Included

I.b Commissioning (Select one)
☐ Commissioning ☐ No Commissioning

Systems Commissioned:

II. Optimize Energy Performance

II.a Energy Efficiency

i Energy Reduction 30% target _____

ii Efficiency Standard
☐ 90.1 - 2004 ☐ 90.1 - 2007 ☐ 90.1 - 2010

a. Total Design Energy Use Intensity (EUI): kBTU/Sq Ft/Year

iii New Technology: Provide description

II.b On-Site Renewable Energy

i. Solar Hot Water 30% target _____

ii. Renewable energy technology types (select all that apply)
☐ Daylighting ☐ Ground Source Heat Pumps ☐ Solar Photovoltaic
☐ Geothermal ☐ Mechanical (i.e., direct water pumping) ☐ Solar Thermal -domestic hot water
☐ Wind ☐ Solar Thermal -space conditioning

iii. Sustainable Roof Attribute (Select all that apply)
☐ Cool - white ☐ Cool - reflective ☐ Solar PV ☐ Solar Thermal ☐ Vegetated

II.c Building-level Metering (Measurement) ☐ Included ☐ Not Included

III. Protect and Conserve Water

III.a Indoor Water

i Reduce potable water _____

ii Building-level Metering (Measurement) ☐ Included ☐ Not Included

a. Total Design Indoor Water Use Intensity (WUI): Gallons/Sq Ft/Year _____

III.b Outdoor Water

i Reduce landscape water ☐ 50% below conventional ☐ 100% ☐ Not Met

IV. Enhance Indoor Environmental Quality

IV.a Ventilation and Thermal Comfort

i Thermal Environmental Conditions ☐ Met ☐ Not Met

ii Ventilation ☐ Met ☐ Not Met

IV.b Moisture Control Plan ☐ Included ☐ Not Included

IV.c Daylighting

i Minimum Daylight ☐ Met ☐ Not Met

ii Automatic dimming controls ☐ Included ☐ Not Included

IV.d Low-Emitting Materials ☐ Met ☐ Not Met

NAVFAC SUSTAINABILITY AND ENERGY DATA --- *NEW CONSTRUCTION & MAJOR RENOVATION*

IV.e Protect Indoor Air Quality during Construction ☐ Met ☐ Not Met

V. Reduce Environmental Impact of Materials

V.a Recycled Content: www.epa/gov/cpg ☐ Met ☐ Not Met

V.b Biobased Products ☐ Met ☐ Not Met

V.c Waste and Materials Management

i. Waste Diversion (50% targett) 0%

ii. Waste Management ☐ Included ☐ Not Included

V.d Ozone Depleting Compounds ☐ Met ☐ Not Met

To maintain prior project sustainability information, print and upload a copy of the completed worksheet to the Notes tab as Design & Criteria note BEFORE updating the tab.

GUIDANCE ON CALCULATION FOR EUI & WUI

1 The EUI must be calculated as the total Design Energy Consumption per year (including savings from renewables) divided by the total Building Area (including unconditioned indoor space).

a. The total Design Energy Consumption can be found in the Energy Cost Budget (ECB) Compliance Report. The Design Energy Consumption is in the Energy Summary by End Use Table at the bottom of page 2 of the ECB Report. The value is listed as Total Including Solar for the Proposed Building. It is the first field on the bottom row. (Units in the ECB Report are 10^6 Btu/yr, so multiply by 1000 to yield kBtu/yr

b. The total Building Area (including unconditioned indoor spaces) can be found in the Energy Cost Budget (ECB) Compliance Report in the Space Summary Table on page 1 of the ECB Report. The value is listed as Total (area) including Conditioned area and Unconditioned area. Insure the units are in square feet

2 The WUI must be calculated as the total Design Indoor Potable Water Consumption per year divided by the total Building Area (including unconditioned space).

a. The total Design Water Consumption can be found in the LEED WE P1 water consumption calculation *or* Green Globes 3.4.1.1 Water Consumption calculation. The value is the Design Case – Annual Potable Water Consumption. It is listed in units of Gallons/year

b. The total Building Area (including unconditioned spaces) can be found in the Energy Cost Budget (ECB) Compliance Report in the Space Summary Table on page 1 of the ECB Report. The value is listed as Total (area) including Conditioned area and Unconditioned area. Insure the units are in square feet

NAVFAC SUSTAINABILITY AND ENERGY DATA -- *RENOVATIONS >$2.5M &<50% PRV; OR ENERGY*

PROJECT INFORMATION

Work Order No.: _____ Budget FY _____ Customer Reference No.: _____
Project Title: _____
Location/UIC: _____
NAVFAC Project Manager: _____ Estimated Cost/PA: _____
Project Type: _____ Project Design Level: _____
Facility Area: _____ U/M: _____ Category Code: _____ Facility #: _____
AE Contract # & T.O. _____ AE Firm Sustainability Coordinator: _____
AE Firm Name: _____
Project Phase: ☐ Solicitation Documents Complete (Draft) ☐ Construction Complete (Final)
Construction Contract & T.O. _____ Award Date (P/A): _____ BOD (P/A): _____
Construction Contractor: _____
Contractor's Sustainability Coordinator: _____

SUSTAINABILITY DATA - GUIDING PRINCIPLES for SUSTAINABLE EXISTING BUILDINGS

Use this form to collect design and as-constructed project information to be recorded on the Sustainable and Energy Tab in eProjects.

Provide justification for each target missed:

I. Employ Integrated Assessment, Operation, and Management Principles
- I.a Integrated Assessment, Operation, and Management ☐ Included ☐ Not Included
- I.b Commissioning (Select one)
  - ☐ Commissioning ☐ No Commissioning
  - ☐ Re-Commissioning ☐ Retro-Commissioning

Systems Commissioned

II. Optimize Energy Performance
- II.a Energy Efficiency
  - i Energy Reduction Below Baseline (20% target) _____ %
  - ii Efficiency Standard (Select one)
    - ☐ Energy Star 75 or higher ☐ Building Baseline 2003
    - ☐ ASHRAE 90.1-2007 ☐ ASHRAE 90.1-2010
    - a. Total Design Energy Use Intensity (**EUI**): kBTU/Sq Ft/Year
  - iii New Technology: Provide description
- II.b On-Site Renewable Energy
  - i. Solar Hot Water Demand (30% target)
  - ii. Renewable energy technology types (Select all that apply)
    - ☐ Daylighting ☐ Ground Source Heat Pumps ☐ Solar Photovoltaic
    - ☐ Geothermal ☐ Mechanical (i.e., direct water pumping) ☐ Solar Thermal -domestic hot water
    - ☐ Wind ☐ Solar Thermal -space conditioning
  - iii. Sustainable Roof Attribute (Select all that apply)
    - ☐ Cool - white ☐ Cool - reflective ☐ Solar PV ☐ Solar Thermal ☐ Vegetated
- II.c Building-level Metering (Measurement) ☐ Included ☐ Not Included

III. Protect and Conserve Water
- III.a Reduce Indoor Water
  - i Choose Option (Select one)
    - ☐ 20% below IPC or IBC ☐ 20% below bldg baseline 2003
  - ii Reduce potable water (percent) _____ %
  - ii Building-level Metering (Measurement) ☐ Included ☐ Not Included
    - a. Total Design Indoor Water Use Intensity (**WUI**): Gallons/Sq Ft/Year
- III.b Reduce landscape water (Select one) ☐ 50% below conventional ☐ 50% below building baseline 2003 ☐ 100%

IV. Enhance Indoor Environmental Quality
- IV.a Ventilation and Thermal Comfort
  - i Thermal Environmental Conditions ☐ Met ☐ Not Met
  - ii Ventilation ☐ Met ☐ Not Met
- IV.b Moisture Control Plan ☐ Included ☐ Not Included
- IV.c Daylighting and Lighting Controls
  - i Daylighting and lighting controls (Select one) ☐ 2% in 50% of occupied spaces ☐ Not Met
    ☐ 50% occupant control
  - ii Automatic lighting controls ☐ Included ☐ Not Included
- IV.d Low-Emitting Materials ☐ Met ☐ Not Met
- IV.e Protect Indoor Air Quality during Construction ☐ Met ☐ Not Met

V. Reduce Environmental Impact of Materials
- V.a Recycled Content: www.epa/gov/cpg ☐ Met ☐ Not Met
- V.b Biobased Products ☐ Met ☐ Not Met
- V.c Waste and Materials Management
  - i Waste Diversion - 50% target 0% %
  - ii Waste Management ☐ Included ☐ Not Included
- V.d Ozone Depleting Compounds ☐ Met ☐ Not Met

To maintain prior project sustainability information, print and upload a copy of the completed worksheet to the Notes tab as Design & Criteria note BEFORE updating the tab.

GUIDANCE ON CALCULATION FOR EUI & WUI

1 The **EUI** must be calculated as the total Design Energy Consumption per year (including savings from renewables) divided by the total Building Area (including unconditioned indoor space).

a. The total Design Energy Consumption can be found in the Energy Cost Budget (ECB) Compliance Report. The Design Energy Consumption is in the Energy Summary by End Use Table at the bottom of page 2 of the ECB Report. The value is listed as Total Including Solar for the Proposed Building. It is the first field on the bottom row. (Units in the ECB Report are 10^6 Btu/yr, so multiply by 1000 to yield kBtu/yr

b. The total Building Area (including unconditioned indoor spaces) can be found in the Energy Cost Budget (ECB) Compliance Report in the Space Summary Table on page 1 of the ECB Report. The value is listed as Total (area) including Conditioned area and Unconditioned area. Insure the units are in square feet

2 The **WUI** must be calculated as the total Design Indoor Potable Water Consumption per year divided by the total Building Area (including unconditioned space).

a. The total Design Water Consumption can be found in the LEED WE P1 water consumption calculation *or* Green Globes 3.4.1.1 Water Consumption calculation. The value is the Design Case – Annual Potable Water Consumption. It is listed in units of Gallons/year

b. The total Building Area (including unconditioned spaces) can be found in the Energy Cost Budget (ECB) Compliance Report in the Space Summary Table on page 1 of the ECB Report. The value is listed as Total (area) including Conditioned area and Unconditioned area. Insure the units are in square feet

NAVFAC Red Zone
Facility Turnover Planning Meeting

AGENDA

I. Introduction and Overview – Purpose CM

The purpose of the Facility Turnover Planning Meeting is to address elements within the project team's purview – schedule management, assure completed facility complies with contract requirements, and other contractual issues. Each member of the project delivery team (Client, NAVFAC, and the contractor) has critical responsibilities to ensure timely completion and turnover of the new facility and each member should execute the NRZ process to achieve this end. The NRZ process provides a final re-focusing of attention to details of those key elements critical for a successful construction contract completion. In implementing NRZ processes, the NAVFAC/Contractor/Client team take a collective "snapshot" of contract status, identifying remaining actions to be accomplished, and confirm required resources needed for successful contract completion and turnover to the Client.

The Facility Turnover Planning Meeting is a collaborative effort between the Client, NAVFAC, and the contractor and results in a completed "NRZ Checklist/POAM Items" list that identifies the major items (and their due dates) that must be completed by the Contractor, the Client and the NAVFAC team to ensure timely completion of the contract.

II. Attendees

NAVFAC Echelon IV (PM); NAVFAC FEAD/ROICC Team (AROICC, CM, ET/QA, Contracting Officer); Client Team (Project Manager, Program Coordinator, User/Tenant); Contractor Team (Project Manager, Project Superintendent, CQC Manager)

III. Schedule to Completion (POAM)	Contractor
IV. Schedule of Final Outfitting and Occupancy (POAM)	Client
V. Critical feature(s) of project (POAM)	CM
VI. Transfer of Maintenance Responsibility	CM
VII. Systems training & O&M Manuals (POAM)	CQC Manager
VIII. Other Items to include on NRZ checklists	All
IX. Summary of Required Actions and Responsibility	CM

Guidelines for conducting Facility Turnover Planning Meeting are as follows:

a. Meeting is held at approximately 75% construction contract completion or three to six months prior to BOD. NAVFAC representatives will include the Project Manager, Construction Manager/AROICC (CM) and Design Manager (DM), as appropriate. The contractor representatives include applicable prime contractor staff and decision-makers from major subcontractors. Design-Build contractors will have A-E representatives attending. The Client should include representatives from Public Works Officer (PWO) staff, a Client scope and financial decision maker, a user tenant representative, a facility start-up person, and others such as SPAWAR, Government Telecommunications Contractor, telephone, and furniture contractor, etc.

b. The purpose of the meeting is to plan the remaining work, identify critical project features that still need to be completed (such as “soft” construction contract requirements as shown on the NRZ Checklist/POAM Items), and to complete the filling out of the “NRZ Checklist/POAM Items”.

c. The contractor, client and NAVFAC provide a POC and due date for each item on their checklist. The team fills in the checklists by selecting items applicable to the project, selects due dates on each item, and appoints a person who has responsibility to ensure the item gets completed by the due date. The CM will be responsible to monitor the milestones.

CAPITAL IMPROVEMENTS

ENGINEERING & CONSTRUCTION Bulletin

Issue No. 2008-03 **25 September 2008** **Type: Policy**

Subject: **Acceptance Testing of Critical Systems**

Reference: (a) ECB 2007-01 Proper use of Military Construction Funds, 13 October 2006

Enclosure: (1) Roles and Responsibilities (R&R) Matrices

Cancelled: NAVFAC Instruction 12271.1: NAVFAC Total Building Commissioning Policy, dated 23 October 2003

1. Purpose.

To focus NAVFAC's technical oversight of acceptance testing during construction on five critical areas (electrical, fire and life safety, mechanical, roofing, and underwater structures) to ensure the constructed facility performs as intended and meets the needs of the supported commands; to define the use of Post Construction Award Services (PCAS) funding as it applies to the Capital Improvements Business Line (CIBL) in-house acceptance testing and technical support efforts.

2. Background.

NAVFAC has identified five critical areas that have consistently caused problems in facilities delivered to its supported commands. These areas are electrical, fire and life safety, mechanical, roofing systems, and underwater structures. These five critical areas were identified as requiring ongoing, thorough construction technical oversight in support of acceptance testing. A NAVFAC Team of technical experts determined how to apply responsible oversight to these five critical areas using one-half of PCAS funds. Each Team compiled all systems / sub-systems and developed R&R matrices (enclosure (1)). Each matrix identifies responsibilities of each of the contributors to the quality and functionality of the completed project, including the contractor, Facilities Engineering Command's (FEC) Integrated Product Team (IPT) and Facilities Engineering and Acquisition Division (FEAD) technical staff. The matrices served as the basis for determining the level of effort (man hours) to perform the technical support for acceptance testing. The following table shows the format in the R&R matrices. Each heading is provided with a description of each column's intent:

System	Sub-System	Phase	Element	Ktr QC-DOR (Project Req'ts)	FEAD (SIOH)	FEC (PCAS)
Major system grouping	Specific system	Phase of the project where it will occur	The item or task to be accomplished	What actions, if any, need to be taken by the appropriate party? (Indicates funding method)		

The contractor is still responsible for delivering a high quality and properly functioning facility via the Contractor Quality Control (CQC) program and commissioning process (including documentation and training).

3. Policy and Implementation.

The following will apply to the performance of acceptance testing for the five critical areas:

a. This applies to Military Construction (MILCON) and all Special Projects with costs over $750,000 for design-build and design-bid-build contracts.
b. The Project Manager (PM) shall manage, in coordination with the Construction Manager (CM), the project PCAS funds. The PM shall ensure that PCAS funding is used in accordance with reference (a).
c. The average funds available to support the CIBL acceptance testing in-house effort will be one-half the total PCAS funds.
d. Enclosure (1) defines the roles and responsibilities of the contractor, FEC's IPT and FEAD technical staff.
e. While the FEAD will be responsible for managing the overall construction project, the FEC's IPT will be responsible for the technical support for the acceptance testing effort associated with the five critical areas. Technical support from the FEAD can be leveraged as capabilities and resources allow, and must be coordinated between the FEC IPT and FEAD. The support for the five critical areas will be provided by engineers that have been trained and are experienced in that area.
f. The CM will manage the day-to-day coordination with the contractor and coordinate the necessary reach back to the FEC IPT for technical support for acceptance testing.
g. PCAS must be budgeted and included in the project costs. The PCAS costs must be shown in the budget estimate summary sheets (BESS) on the DD 1391.
h. The Public Works Business Line (PWBL) has agreed to designate representatives who are responsible for facility maintenance and sustainment to perform the following:
    i. Participate in the submittal review process by providing comments on submittals for the critical areas.
    ii. Be present for the final inspections and tests.
    iii. Be present for all system training.
    iv. Provide feedback and lessons learned to the FEC CI4.
i. It is recommended that the designated representatives, who are responsible for maintenance and sustainment visit the site during construction to become familiar with the building systems.
j. The efforts in paragraph 3.h above will not be funded using PCAS or supervision, inspection and overhead (SIOH).

JOSEPH E. GOTT, P.E.
Chief Engineer and Director,
Capital Improvements

Note: This ECB has been coordinated with Headquarters, U.S. Marine Corps (Code LFF).

ELECTRICAL ENGINEERING ROLES and RESPONSIBILITIES

System	Sub-Systems	Phase	Elements	EE QC / DOR (Ktr)	FEAD (SIOH)	FEC (PCAS)
All Systems	**Submittals & Plans**	Pre-Construction	Qualifications of Installer, Shop Drawings, Data Sheets, and Calculations (as applicable)	A	C	S
			QC Plan		A	S
			Performance Verification Plan		A	S
	Certificates & Reports	Construction	Functional Acceptance Test Procedure	A	C	S
			Preliminary Test Reports	A	RA	S
			Final Acceptance Test Reports	A	C	S
Power Generators	**Single Operation Generator Sets**	Test Preparation	Perform fuel oil piping tests	V	C	-
			Perform acceptance checks and tests	V	W	C
			Perform preliminary operations	V	W	C
		Final Test	Test all engine protective shutdown devices	V	—	W
			Test all pre-shutdown alarm devices	V	—	W
			Test crank cycle/terminate relay	V	—	W
			Test automatic and manual operations in all possible scenarios involving loss of utility, return of utility, manual starting, and emergency stop	V	—	W
			Perform load test	V	—	W
	Automatic Transfer Switches	Test Preparation	Perform acceptance checks and tests	V	W	C
		Final Test	Simulate loss of normal power	—	—	W
			Simulate return of normal power	V	—	W
			Simulate loss of emergency power	V	—	W
			Simulate all forms of single-phase conditions	V	—	W
			Verify operation of normal power voltage-sensing relays	V	—	W
			Verify engine start sequence	V	—	W
			Verify time delay upon transfer	V	—	W
			Verify operation of alternate power voltage-sensing relays	V	—	W
			Verify automatic transfer operation	V	—	W
			Verify interlocks and limit switch operation	V	—	W
			Verify time delay and retransfer upon normal power restoration	V	—	W
400-Hertz Solid State Frequency Converter	**All**	Test Preparation	Perform acceptance checks and tests	V	W	C
			Verify equipment nameplate information with specifications and approved shop drawings	V	W	—
			Inspect physical and mechanical condition	V	W	—
			Verify correct equipment grounding	V	W	—
			Perform resistance measurements through all bolted connections	V	W	—
			Perform preliminary operations	V	W	C
		Final Test	Test all control devices	V	—	W
			Test all protective shutdown devices	V	—	W
			Perform load test	V	—	W
			Perform transient tests	V	—	W
			Perform harmonic distortion tests	V	—	W
			Perform automatic line drop compensation test	V	—	W

KEY = A - Approve, R - Review, W - Witness, RA - Receipt Acknowledge, S - Surveilance Review, V- Verification and Testing, C - Copy, QA - Quality Assurance

ELECTRICAL ENGINEERING ROLES and RESPONSIBILITIES

System	Sub-Systems	Phase	Elements	EE QC / DOR (Ktr)	FEAD (SIOH)	FEC (PCAS)
Uninterruptible Power Supply (UPS)	**All**	Test Preparation	Verify ventilation equipment in UPS and battery rooms are operational	V	W	—
			Verify battery cells are filled with electrolyte	V	W	—
			Verify polarity of DC connections and phase rotation of AC connections	V	W	—
			Verify AC power to all equipment	V	W	—
			Verify remote monitors and control wiring	V	W	—
			Verify UPS system and battery system is properly grounded	V	W	—
			Verify operation of emergency shower and eye wash	V	W	—
			Verify control connections between UPS and emergency engine generator signal contacts	V	W	—
			Verify control connections between UPS module and UPS maintenance bypass cabinet	V	W	—
			Perform acceptance checks and tests	V	W	C
		Final Test	Perform load tests	V	—	W
			Perform full-load burn in test	V	—	W
			Perform battery discharge test	V	—	W
			Perform battery performance test	V	—	W
			Perform UPS in conjunction with emergency generator service (if applicable)	V	—	W
Lighting	**Interior Lighting**	Final Test	Verify electronic dimming ballasts operatation over full range of dimming capability without any visually detectable flicker	V	W	—
			Verify occupancy sensors operation	V	W	—
			Verify lighting controls operation	V	W	—
			Verify lighting output levels	V	W	—
	Exterior Lighting	Final Test	Verify photocell aiming and operation	V	W	—
			Verify lighting controls operation	V	W	—
			Verify lighting output levels	V	W	—
Transformers	**Single-Phase Pad-Mounted Transformers**	Factory Routine Tests	Perform resistance measurements, polarity, ratio, no-load losses and excitation current, load losses and impedance voltage, dielectric, leak (liquid-filled), and disolved gas analysis (liquid-filled) tests	—	—	W
		Field Tests	Perform acceptance checks and tests	V	W	C
	Three-Phase Pad-Mounted Transformers	Factory Routine Tests	Perform resistance measurements, polarity, ratio, no-load losses and excitation current, load losses and impedance voltage, dielectric, leak (liquid-filled), and disolved gas analysis (liquid-filled) tests	—	—	W
		Field Tests	Perform acceptance checks and tests	V	W	C
	Secondary Unit Substations	Factory Routine Tests	Perform resistance measurements, polarity, ratio, no-load losses and excitation current, load losses and impedance voltage, and dielectric tests	—	—	W
		Field Tests	Perform acceptance checks and tests	V	W	C
	Primary Unit Substations	Factory Routine Tests	Perform resistance measurements, polarity, ratio, no-load losses and excitation current, load losses and impedance voltage, dielectric, leak (liquid-filled), and disolved gas analysis (liquid-filled) tests	—	—	W
		Field Tests	Perform acceptance checks and tests	V	W	C

KEY = A - Approve, R - Review, W - Witness, RA - Receipt Acknowledge, S - Surveilance Review, V- Verification and Testing, C - Copy, QA - Quality Assurance

ELECTRICAL ENGINEERING ROLES and RESPONSIBILITIES

System	Sub-Systems	Phase	Elements	EE QC / DOR (Ktr)	FEAD (SIOH)	FEC (PCAS)
Switchgear/ Switchboards	**Metal-Clad Switchgear / Switchboards and Busway**	Factory Production Tests	60 Hz dielectric, mechanical operation, electrical operation and control wiring, and ground fault sensing equipment tests	—	—	W
		Test Preparation	Perform acceptance checks and tests	V	W	C
Cable	**Medium-Voltage Cable, Terminations, and Splices**	Test Preparation	Perform acceptance checks and tests	V	W	—
		Field Tests	Perform shield continuity and very low frequency (VLF) tests	V	W	—
SF6 Switch - Padmount	**Medium Voltage Pad-mounted Switches**	Factory Production Tests	60 Hz dielectric, mechanical operation, electrical operation and control wiring, and ground fault sensing equipment tests	—	—	W
		Test Preparation	Perform acceptance checks and tests	V	W	C
Airfield Lighting	**Airfield Lighting Circuits**	Field Tests	Airfield lighting circuits low voltage continuity and high voltage insulation resistance tests	V	W	—
		Field Tests	Airfield lighting circuit operating test	V	W	—
	Counterpoise	Field Tests	Counterpoise system test	V	W	—
	Constant	Field Tests	Perform open circuit protector and load tests	V	W	—
	All	Field Tests	Perform airfield lighting system operation test	V	W	—
Cathodic Protection	**Cathodic Protection by Galvanic Anodes**	Field Tests	Perform non-destructive testing of anodes	V	W	—
			Perform destructive testing of anodes	V	W	—
			Perform base potential tests, insulation joint testing, electrical continuity testing, pipe casing testing, anode-to-soil potential tests, anode output tests, protected potential measurement tests, and interference testing.	V	W	—
			Perform field operation tests.	V	—	W
	Cathodic Protection by Impressed Current	Field Tests	Perform non-destructive testing of anodes	V	W	—
			Perform destructive testing of anodes	V	W	—
			Perform base potential tests, permanent reference electrode calibration, insulation joint testing, electrical continuity testing, rectifier system testing, pipe casing testing, protected potential measurement tests, and interference testing.	V	W	—
			Perform field operation tests.	V	—	W

KEY = A - Approve, R - Review, W - Witness, RA - Receipt Acknowledge, S - Surveilance Review, V- Verification and Testing, C - Copy, QA - Quality Assurance

FIRE PROTECTION ENGINEERING ROLES and RESPONSIBILITIES

System	Sub-Systems	Phase	Elements	FP QC / DOR (Ktr)	FEAD (SIOH)	FEC (PCAS)
All Systems	Required Submittals		QC Plan	—	A	S
			Performance Verification Plan	—	A	S
		Test Prep & Preliminary Certifications	Field Visit/Construction Surveillance Reports	—	S	QA
		Final Test Reports &	Final Acceptance Test Reports	A	S	QA or A
			Final Life Safety/Fire Protection Certification	—	S	A
Sprinkler Systems	Wet Pipe Sprinkler Systems	Test Preparation	Process/review system submittal (Qualifications of Installer, Shop Drawings, Data Sheets & Calcs)	A	C	S
			Process/review Preliminary Test Reports & Certifications	—	RA	S
			Witness hydrostatic test.	A	C	—
			Witness flush test.	V	W	—
			Visually inspect system for adherence to plan, completeness, and adequacy of installation.	A	QA	QA
			Visually inspect pipe pentrations	A	QA	QA
			Visually inspect sprinklers for location and that they are not painted / taped.	A	QA	QA
			Visually inspect seismic bracing	A	C	QA
			Operate control valves {Other than main service entrance riser}	A	C	QA
			Visually inspect check valve installation	A	C	QA
			Visually inspect test/drain discharge locations	A	C	QA
			Witness backflow preventer forward-flow test (NFPA 13, §16.2.5).	V	W	W
			Inspect/test alarm valve assembly and water service entrance(pipe sleeves, thrust rods, etc.), including valves, flow switch & tamper switches)	V	C	W
			Inspect/test flow control valve assembly	V	C	W
	Additional requirements for Dry Pipe, Preaction - Deluge		Process system submittal (Qualifications of Installer, Shop Drawings, Data Sheets & Calcs)	A	C	S
			Preliminary Test Reports & Certifications	—	RA	S
			Witness hydrostatic test.	A	C	—
			Witness flush test.	V	W	—
		Final Test	Verify Low-point drains are provided	V	—	QA
			Visually inspect air supply and piping	A	S	QA
			Witness backflow preventer test.	V	W	W
			Test high-low pressure air switch operation	V	—	W
			Inspect/Test deluge or dry valve riser assembly (including control valves, alarm switch & tamper switches), and functional operation	A	S	W
			Inspect/test detection and releasing system	See Fire Alarm System		

KEY = A - Approve, R - Review, W - Witness, RA - Receipt Acknowledge, S - Surveillance Review, V- Verification and Testing, C - Copy, QA - Quality Assurance

FIRE PROTECTION ENGINEERING ROLES and RESPONSIBILITIES

System	Sub-Systems	Phase	Elements	FP QC / DOR (Ktr)	FEAD (SIOH)	FEC (PCAS)
Water Distribution	**Fire hydrants, distribution piping, & control valves**	Final Test	Process system submittal (Qualifications of Installer, Shop Drawings, Data Sheets & Calcs)	A	C	—
			Preliminary Test Reports & Certifications	—	RA	S
			Visually inspect all thrust blocks.	A	QA	—
			Witness hydrostatic test.	A	C	—
			Witness flush testing of hydrant	A	C	QA
			Operate all control/isolation valves (each)	V	S	QA
			Operate fire hydrants and check for proper drainage (each)	V	S	QA
	Water storage	Construction	Preliminary Test Reports & Certifications	—	RA	S
			Verify suction piping w/in tank is installed in accordance with design	A	C	S
Pumps for Fire Protection (Water & Foam)	**Pumps & Controllers**		Process system submittal (Qualifications of Installer, Shop Drawings, Data Sheets & Calcs)	A	C	S
			Preliminary Test Reports & Certifications	—	RA	S
		Test Preparation	Visually inspect system for adherence to plan, completeness, and adequacy of installation.	A	QA	QA
		Test Preparation	Witness pump controller functional tests (including automatic transfer switch operation & battery transfer as applicable).	A	QA	W
			Witness flow test to generate performance curve (pressure vs discharge, rpms, amps, shaft alignment)	V	QA	W
		Final Test	Witness automatic and manual starts & stops	V	QA	W
			Verify that controller supervisory signals are received by the fire alarm control panel	V	C	W

KEY = A - Approve, R - Review, W - Witness, RA - Receipt Acknowledge, S - Surveillance Review, V- Verification and Testing, C - Copy, QA - Quality Assurance

FIRE PROTECTION ENGINEERING ROLES and RESPONSIBILITIES

System	Sub-Systems	Phase	Elements	FP QC / DOR (Ktr)	FEAD (SIOH)	FEC (PCAS)
Fire Alarm Systems	**Evacuation / Notification Detection & Releasing Systems.**	Test Preparation & Final Test	Process system submittal (Qualifications of Installer, Shop Drawings, Data Sheets & Calcs)	A	C	S
			Preliminary Test Reports & Certifications	—	RA	S
			Visually inspect system for adherence to plan, completeness, and adequacy of installation. (30,000 SQ. FT.)	A	QA	QA
			Test initiating devices for proper operation. (Activate 15% of smoke or heat detectors with no failures {30,000 sq. ft)/(625 sq. ft/ detector)(0.15)=7}	A	QA	QA
			Test initiating circuits for shorts, ground faults, and general operation	A	C	QA
			Test signaling circuits for shorts, ground faults, and general operation	A	C	QA
			Verify audible and visual devices operate properly and audible devices can be heard throughout the facility	A	C	QA
			Test peripheral devices (door hold opens, etc)	A	C	QA
			Witness functional test of the main control panel	V	C	W
			Test interface with other systems (i.e., preaction, gaseous, etc.)	V	C	W
			Test that correct signals are being sent to the base receiving station	V	C	W
			Test recall for elevators - See "Others - Elevators" {Bldg 2 stories or more}	V	S	W
			Test AHU shut down - See "Others - HVAC"	V	S	W
			Test power shut down - See "Others - {Elevators} Electrical"	V	C	W
	Control Panels used for Releasing Service		Process system submittal (Qualifications of Installer, Shop Drawings, Data Sheets & Calcs)	A	C	S
			Preliminary Test Reports & Certifications	—	RA	S
			Test releasing circuits for shorts, ground faults, and general operation	V	C	W
			Test power shut down - See "Others - Electrical"	V	S	QA
			Test automatic closing of dampers/doors	V	S	W
	Base-Wide Fire Reporting System		Process system submittal (Qualifications of Installer, Shop Drawings, Data Sheets & Calcs)	A	C	S
			Preliminary Test Reports & Certifications	—	RA	S
			Test transmitting devices to ensure the signals are received at the main console **{per bldg}**	V	C	W
			Test the main console for redundancy requirements	V	S	W

KEY = A - Approve, R - Review, W - Witness, RA - Receipt Acknowledge, S - Surveillance Review, V- Verification and Testing, C - Copy, QA - Quality Assurance

FIRE PROTECTION ENGINEERING ROLES and RESPONSIBILITIES

System	Sub-Systems	Phase	Elements	FP QC / DOR (Ktr)	FEAD (SIOH)	FEC (PCAS)
Miscelaneous Extinguishing Systems	**Gaseous Systems**	Final Test	Process system submittal (Qualifications of Installer, Shop Drawings, Data Sheets & Calcs)	A	C	S
			Preliminary Test Reports & Certifications	—	RA	S
			Visually inspect system for adherence to plan, completeness, and adequacy of installation.	A	S	QA
			Verify correct nozzles were installed	A	S	W
			Witness room pressurization test	V	S	W
			Witness full functional test to verify cylinder head functions properly and all control/interface functions operate accordingly.	V	S	W
			Inspect/test detection and releasing system	See Fire Alarm System		
	Wet Chemical & Dry Chemical Systems	Test Prep	Process system submittal (Qualifications of Installer, Shop Drawings, Data Sheets & Calcs)	A	C	S
			Preliminary Test Reports & Certifications	—	RA	S
			Verify piping and nozzles are installed in accordance with manufacturer's listing requirements	A	S	W
			Witness discharge test - ensure nozzles are bagged if discharging water in a wet chemical system	V	S	W
		Final Test	Verify alarm and supervisory signals are sent to the FACP	V	S	W
			Verify power and gas are disconnect when system activates (if applicable)	V	S	W
			Verify exhaust system either continues to run or shuts down depending on listing (if applicable)	V	S	W
	Foam Systems (All types)	Test Preparation	Process system submittal (Qualifications of Installer, Shop Drawings, Data Sheets & Calcs)	A	C	S
			Preliminary Test Reports & Certifications	—	RA	S
			Review test plan	—	C	QA
			Review the contractor's test plan for environmental and other compliance	—	S	QA
			Inspect/test detection and releasing system	See Fire Alarm System		
			Visually inspect system for adherence to plan, completeness, and adequacy of installation. Conduct functional test of entire system. Submit report.	A	QA	QA
			Verify correct foam generators / discharge devices are installed and properly piped	A	—	QA
			Verify correct size pipe and installed properly	A	—	QA
			Verify riser assembly (deluge valve) is installed properly	A	—	QA
		Final Test	Verify strainer has proper mesh	V	QA	W
		Final Test	Conduct performance test to ensure proper setting and operation of foam control valves and discharge devices. *(multiply by the number of risers)*	V	QA	W
			Conduct functional test of each generator, ratio controller, or proportioner. *(multiply by the number of risers)*	—	QA	W

KEY = A - Approve, R - Review, W - Witness, RA - Receipt Acknowledge, S - Surveillance Review, V- Verification and Testing, C - Copy, QA - Quality Assurance

FIRE PROTECTION ENGINEERING ROLES and RESPONSIBILITIES

System	Sub-Systems	Phase	Elements	FP QC / DOR (Ktr)	FEAD (SIOH)	FEC (PCAS)
Passive	**Fire / Smoke Barriers IBC Inspections (Section 109)**	Preliminary and Final Inspections	Process system submittal (Qualifications of Installer, Shop Drawings, Data Sheets & Calcs)	A	C	S
			Preliminary Test Reports & Certifications	—	RA	S
			Inspect Lath & gypsum board installation	A	QA	QA
			Inspect fire-rated / smoke wall and/or floor penetrations	A	S	QA
			Inspect wall/ceiling/roof joint	A	S	QA
			Inspect/test fire & smoke damper installation and performance	A	S	QA
			Inspect fire doors and frames	A	QA	QA
Life Safety Features	**Exit Signs and Emergency Lighting**	Preliminary	Verify installed locations of exit signs.	A	S	QA
			Verify installed locations of emergency lighting	A	S	QA
		Final Test	Check performance of emergency lighting systems and battery back-up.	A	S	QA
	Emergency Generators		Check to ensure all life safety features on the emergency generator are provide with power in the required amount of time	A	S	QA
Other Systems	**Elevators**	Test	Verify elevator re-call to primary floor	A	S	QA
			Verify elevator re-call to alternate floor	A	S	QA
			Test power disconnect upon water flow	V	S	QA
			Verify signal in elevator cab activates	V	S	QA
	Smoke Control / Exhaust Systems	Preliminary Test	Verify smoke exhaust / smoke control system activates via appropriate initiating devices (IBC §1704)	A	S	QA
			Verify location of duct detectors and for proper installation	A	S	QA
		Final Test	Perform operational test to show smoke exhaust / smoke control system functions as designed	V	S	QA
			Special Inspections for smoke control (IBC §1704) (See NFPA 92A & 92B, Chap. 8.)	A	W	W
			Perform operational test to verify detector functions properly and shuts down the correct AHU	V	S	QA
	Electrical	Pre-Test	Verify each detector associated with the electrical equipment disconnects power	A	S	QA
		Final Test	Test power disconnect for associated electronic equipment	V	S	QA

KEY = A - Approve, R - Review, W - Witness, RA - Receipt Acknowledge, S - Surveillance Review, V- Verification and Testing, C - Copy, QA - Quality Assurance

MECHANICAL ENGINEERING ROLES and RESPONSIBILITIES

System	Sub-Systems	Phase	Elements	ME QC / DOR (Ktr)	FEAD (SIOH)	FEC (PCAS)
Energy Supply Systems	**Fuel Oil - ALL**	Field Visit	**Complete System -** Verify contractor provided complete fuel oil system to the facility, including applications and permits	A	QA	—
			Piping - Verify fuel oil piping meets requirements of International Mechanical Code.	A	QA	—
			Testing - Verify oil system testing meets requirements of NFPA 31.	V	W	—
	Fuel Oil - Exterior	Submittal Process	**Piping -** Verify fuel piping is either ASTM A 53 Type E (electric-resistance welded, Grade A or B) black steel; or ASTM A 53 Type S (seamless, Grade A or B) black steel; or API SPEC 5L, seamless, submerged-arc weld or gas metal-arc weld, Grade B, black ste	A	RA	—
			Fuel Pumps - Verify fuel pumps comply with NEMA MG 1, NFPA 70, and are designed for use with hydrocarbon fuels.	A	RA	—
			Fuel Pumps - Verify fuel pumps have a working pressure of 1896 kilopascals (275 psig) at 38 degrees C (100 degrees F).	A	RA	—
			Fuel Meters - Verify fuel meters are continuous duty, positive displacement type, with electronic thermal compensation capability, suitable for outdoor installation.	A	RA	—
			Fuel Meters - Verify fuel meters are designed for use with hydrocarbon fuels and have a working pressure of 1896 kilopascals (275 psig) at 38 degrees C (100 degrees F).	A	RA	—
		Submittal Process/ Field Visit	**Storage Tanks -** Verify aboveground liquid fuel storage tanks are concrete encased or double wall in accordance with UL 142 and UL 2085 with secondary containment and leak monitoring of a capacity to meet the system requirements. Verify overfill/spill con	A	RA/ QA	S
			Dispensing Tanks - Verify Liquid fuel dispensing tanks are concrete encased or double wall in accordance with UL 142 and UL 2085 with secondary containment and leak monitoring of a capacity to meet the system requirements. Verify overfill/spill containme	A	RA/ QA	S
	Fuel Oil - Interior	Submittal Process	**Pumps -** Verify pumps that are not part of the burner assembly are positive dispacement type	A	RA	—
		Field Visit	**Oil Filter -** Verify an oil filter is provided prior to oil entering appliance or pump.	A	QA	QA
		Field Visit	**Drip Legs -** Verify drip legs are provided and properly installed prior to oil entering appliance or pump.	A	QA	—
		Submittal Process	**Storage Tanks -** Verify all storage tanks meet NFPA 31 requirements.	A	RA	—
	Natural Gas - ALL	Field Visit	**Complete System -** Verify contractor provided complete natural gas system to the facility, including applications and permits	A	QA	—
		Field Visit	**Testing -** Verify system was tested at 1.5 times maximum working pressure, but not less than 350 kPa (50 PSI) per NFPA 54	V	W	—

KEY = A - Approve, R - Review, W - Witness, RA - Receipt Acknowledge, S - Surveilance Review, V- Verification and Testing, C - Copy, QA - Quality Assurance

MECHANICAL ENGINEERING ROLES and RESPONSIBILITIES

System	Sub-Systems	Phase	Elements	ME QC / DOR (Ktr)	FEAD (SIOH)	FEC (PCAS)
Energy Supply Systems (continued)	**Natural Gas - Exterior (Contractor installed piping)**	Field Visit	**Piping -** Verify exterior gas piping meets requirements of local natural gas utility	A	QA	—
		Submittal Process	**Piping -** Verify piping meets requirements of ASME B31.8, Gas Transmission and Distribution Piping Systems	A	RA	—
		Submittal Process	**Piping -** Verify the natural gas piping is either ASTM A 53, Type E (electric-resistance welded, Grade A or B) black steel piping or ASTM A 53 Type S (seamless, Grade A or B) black steel piping or ASTM D 2513, Grade PE2406 or PE3408 polyethylene piping an	A	RA	—
		Field Visit	**Meter and Pressure Regulator -** Verify meter and pressure regulator are provided in accordance with local utility requirements.	A	QA	—
		Field Visit	**Piping Identification -** Verify polyethylene plastic tape manufactured specifically for warning and identifying buried utility lines are provided for non-metallic undergound piping systems	A	QA	—
	Natural Gas - Interior	Submittal Process	**Piping -** Verify interior gas piping meets requirements of NFPA 54, National Fuel Gas Code	A	RA	—
	Propane - ALL	Field Visit	**Complete System -** Verify contractor provided complete propane system to the facility, including appropriate applications and permits.	A	QA	—
	Propane - Exterior	Submittal Process	**Piping -** If piping is not provided by propane supplier, verify the propane piping is either ASTM A 53, Type E (electric-resistance welded, Grade A or B) black steel piping or ASTM A 53 Type S (seamless, Grade A or B) black steel piping or ASTM D 2513, Gr	A	RA	—
		Submittal Process	**Fittings -** Confirm Polyethylene fittings meet ASTM D 2683 for socket fittings or ASTM D 2513 for molded butt-fusion fittings	A	RA	—
		Field Visit	**Tank -** Verify propane tank capacity conforms to tank capacity submitted in shop drawings.	A	QA	—
		Submittal Process	**Tank -** If tank is not provided by propane supplier, verify propane tank material and installation comply with NFPA 58.	A	RA	—
		Submittal Process	**Tank -** If tank is not provided by propane supplier, verify propane tank is ASME labeled.	A	QA	—
		Field Visit	**Piping Identiication -** Verify polyethylene plastic tape manufactured specifically for warning and identifying buried utility lines are provided for non-metallic undergound piping systems	A	QA	—

KEY = A - Approve, R - Review, W - Witness, RA - Receipt Acknowledge, S - Surveilance Review, V- Verification and Testing, C - Copy, QA - Quality Assurance

MECHANICAL ENGINEERING ROLES and RESPONSIBILITIES

System	Sub-Systems	Phase	Elements	ME QC / DOR (Ktr)	FEAD (SIOH)	FEC (PCAS)
Energy Supply Systems (continued)	**Propane - Interior**	Field Visit	Verify the propane installation meets the requirements specified in NFPA 58.	A	QA	—
		Submittal Process	**Piping -** Verify standard pipe dimension ratio is not more than 11.5	A	RA	—
	Steam - Exterior Underground	Submittal Process	Confirm the submission of a Certificate of Satisfactory Operation certifying that at least 3 systems installed by the piping system manufacturer within the previous 10 years have and are operating satisfactorily for not less than 5 years.	A	RA	S
		Submittal Process	Confirm the submission of a written certification by the piping system manufacturer that the distribution system installer is technically qualified and experienced in the installation of the system.	A	RA	S
		Submittal Process/ Field Visit	Verify underground steam and condensate piping in separate conduits is direct buried, factory pre-fabricated, pre-insulated, and consist of a steel service pipe with polyurethane insulation and a high-density polyethylene (HDPE) jacket.	A	RA/ QA	—
		Submittal Process/ Field Visit	Confirm piping system fittings and components are factory fabricated and no field insulated fittings are provided.	A	RA/ QA	—
		Field Visit	Verify asbestos cement or plastic conduit piping is not provided.	A	QA	—
		Field Visit	**Piping Insulation -** Verify the piping system insulation thickness is in accordance with contract requirements.	A	QA	—
		Submittal Process	**Isolation Valves -** Verify ASME class 150 isolation valves are provided in manholes for system supply and return lines at take-offs for service to each building .	A	QA	—
		Submittal Process/ Field Visit	**Expansion Loops -** Verify expansion loops are utilized to compensate for piping expansion.	A	RA/ QA	S
		Submittal Process/ Field Visit	**Expansion Anchors -** Verify piping expansion anchors are located outside manholes.	A	RA/ QA	—
		Field Visit	**Manholes -** Verify system manholes are constructed of reinforced, 206.8 bar (3000 psi) concrete. Verify manhole floor and sides are watertight and were made in one monolithic pour. Verify manhole top extends a minimum of 300 mm (6 inches) above grade. V	A	QA	—
		Submittal Process	Verify a sump pit and a vertical sump pump designed for an operating temperature design of 93 degrees C (195 degrees F) minimum are provided in each system manhole.	A	RA	—
		Submittal Process	**Sump Pump - Float Control -** Verify a 2-pole float control is provided for each manhole sump pump.	A	RA	—
		Submittal Process/ Field Visit	**Valves -** For system valves located outside of manholes, verify a cast-iron or ductile-iron valve box and cover of a suitable size are provided. Verify the box cover has the word(s) describing the utility cast on the cover.	A	RA/ QA	—

KEY = A - Approve, R - Review, W - Witness, RA - Receipt Acknowledge, S - Surveilance Review, V- Verification and Testing, C - Copy, QA - Quality Assurance

MECHANICAL ENGINEERING ROLES and RESPONSIBILITIES

System	Sub-Systems	Phase	Elements	ME QC / DOR (Ktr)	FEAD (SIOH)	FEC (PCAS)
Energy Supply Systems (continued)	**Steam - Exterior Aboveground**	Submittal Process	**Piping -** Verify steam piping is either ASTM A 53 Type E (electric-resistance welded, Grade A or B) black steel pipe or ASTM A 53 Type S (seamless, Grade A or B) black steel pipe or, for pipe sizes through 250 mm (9 inches), ASTM A 106 (Grade A or B) black	A	RA	—
		Submittal Process	**Piping -** Verify condensate piping is either ASTM A 53 Type E (electric-resistance welded, Grade A or B) black steel, Weight Class XS (Extra Strong); or ASTM A 53 Type S (seamless, Grade A or B) black steel, Weight Class XS (Extra Strong); or ASTM A 106, G	A	RA	—
		Field Visit	**Piping Insulation -** Verify piping insulation is either fibrous glass, calcium silicate, or cellular glass as indicated in submitted shop drawings. Verify pipe insulation matches existing or surrounding insulation if applicable.	A	QA	—
		Field Visit	**Piping Insulation -** Verify the piping system insulation thickness is in accordance with contract requirements.	A	QA	—
		Field Visit	**Insulation -** Verify insulation is covered with an with aluminum jacket painted to conform with the Base Architectural Plan.	A	QA	—
		Submittal Process/ Field Visit	Verify the use of either MSS SP-58 or MSS SP-69 adjustable supports with insulation protection saddles. Verify roller supports utilize stainless steel axles.	A	RA/ QA	—
		Field Visit	**Support Poles -** Verify support poles are installed with guy wires and necessary hardware.	A	QA	—
		Submittal Process/ Field Visit	**Pipe Expansion -** Verify pipe expansion is compensated by utilizing either expansion loops, guided sliexpansion joints, or flexible ball type expansion joints.	A	RA/ QA	S
	Steam - Interior	Submittal Process	**Steam piping** - Verify is ASTM A106 or A53, Grade B, Schedule 40, black steel, electric-resistance welded or seamless	A	RA	—
		Submittal Process/ Field Visit	**Steam piping** - Verify insulated with mineral fiber or cellular glass insulation with all-purpose jacket	A	RA/ QA	—
		Submittal Process	**Condensate return piping** - Verify is ASTM A106 or ASTM A53, Grade B, Schedule 80, black steel, electric-resistance welded or seamless	A	RA	—
		Submittal Process/ Field Visit	**Condensate return piping** - Verify insulated with mineral fiber or cellular glass insulation with all-purpose jacket	A	RA/ QA	—
		Submittal Process	**Steel pipe fittings** - For piping 50 mm (2 inch) and smaller, verify is ANSI/ASME B16.3 malleable iron screwed fittings or ASME B16.11 socket welding (Class 3000) or ASME B16.11 threaded type (Class 2000)	A	RA	—
		Submittal Process	**Steel pipe fittings** - For piping 63 mm (2-1/2 inch) and larger, verify is ANSI/ASME B16.9 butt-welding fittings or ANSI/ASME B16.5 flanged type	A	RA	—
		Field Visit	**Steam pressure reducing station -** Verify provided for each building	A	QA	—

KEY = A - Approve, R - Review, W - Witness, RA - Receipt Acknowledge, S - Surveilance Review, V- Verification and Testing, C - Copy, QA - Quality Assurance

MECHANICAL ENGINEERING ROLES and RESPONSIBILITIES

System	Sub-Systems	Phase	Elements	ME QC / DOR (Ktr)	FEAD (SIOH)	FEC (PCAS)
nergy Supply Systems (continued)		Submittal Process/ Field Visit	**Steam traps** - Verify steam traps and accessories are in accordance with UFC 3-400-10N	A	RA/ QA	—
		Field Visit	Verify all valves, traps, and PRV's are accessible for service & maintenance	A	QA	—
	Hot Water - Exterior Underground	Submittal Process/ Field Visit	**Piping -** Verify underground hot water supply & return piping in separate conduits is direct buried, factory pre-fabricated, pre-insulated, and consist of a steel service pipe with polyurethane insulation and a high-density polyethylene (HDPE) jacket.	A	RA/ QA	—
		Submittal Process/ Field Visit	Confirm piping system fittings and components are factory fabricated and no field insulated fittings are provided.	A	RA/ QA	—
		Field Visit	Verify asbestos cement or plastic conduit piping is not provided.	A	QA	—
		Submittal Process	The UHDS representative shall be certified in writing by the UHDS manufacturer to be technically qualified and experienced in the installation of the system. Provide a Certificate of Satisfactory Operation certifying that at least 3 systems installed by	A	QA	S
		Field Visit	**Piping Insulation -** Verify the piping system insulation thickness is in accordance with contract requirements.	A	QA	—
		Submittal Process/ Field Visit	**Isolation Valves -** Verify ASME class 150 isolation valves are provided in manholes for system supply and return lines at take-offs for service to each building .	A	RA/ QA	—
		Submittal Process/ Field Visit	**Expansion Loops -** Verify expansion loops are utilized to compensate for piping expansion.	A	RA/ QA	S
		Submittal Process/ Field Visit	**Manholes -** Verify system manholes are constructed of reinforced, 206.8 bar (3000 psi) concrete. Verify manhole floor and sides are watertight and were made in one monolithic pour. Verify manhole top extends a minimum of 300 mm (6 inches) above grade. V	A	RA/ QA	—
		Submittal Process	Verify a sump pit and a vertical sump pump designed for an operating temperature design of 93 degrees C (195 degrees F) minimum are provided in each system manhole.	A	RA	—
		Submittal Process	**Sump Pump - Float Control -** Verify a 2-pole float control is provided for each manhole sump pump.	A	RA	—
		Submittal Process/ Field Visit	**Valves -** For system valves located outside of manholes, verify a cast-iron or ductile-iron valve box and cover of a suitable size are provided. Verify the box cover has the word(s) describing the utility cast on the cover.	A	RA/ QA	—

KEY = A - Approve, R - Review, W - Witness, RA - Receipt Acknowledge, S - Surveilance Review, V- Verification and Testing, C - Copy, QA - Quality Assurance

MECHANICAL ENGINEERING ROLES and RESPONSIBILITIES

System	Sub-Systems	Phase	Elements	ME QC / DOR (Ktr)	FEAD (SIOH)	FEC (PCAS)
En	**Hot Water - Exterior Aboveground**	Submittal Process	**Piping -** Verify hot water piping is either ASTM A 53 Type E (electric-resistance welded, Grade A or B) black steel, Weight Class XS (Extra Strong); or ASTM A 53 Type S (seamless, Grade A or B) black steel, Weight Class XS (Extra Strong); or ASTM A 106, Gr	A	RA	—
		Field Visit	**Piping Insulation -** Verify piping insulation is either fibrous glass, calcium silicate, or cellular glass as indicated in submitted shop drawings.	A	QA	—
		Field Visit	**Piping Insulation -** Verify the piping system insulation thickness is in accordance with contract requirements.	A	QA	—
		Field Visit	**Insulation -** Verify insulation is covered with an with aluminum jacket painted to conform with the Base Architectural Plan.	A	QA	—
		Submittal Process/ Field Visit	**Pipe Expansion -** Verify pipe expansion is compensated by utilizing either expansion loops, guided slip expansion joints, or flexible ball type expansion joints.	A	RA/ QA	S
		Submittal Process/ Field Visit	Verify the use of either MSS SP-58 or MSS SP-69 adjustable supports with insulation protection saddles. Verify roller supports utilize stainless steel axles.	A	RA/ QA	—
		Field Visit	**Support Poles -** Verify support poles are installed with guy wires and necessary hardware.	A	QA	—
	Hot Water - Interior	Submittal Process	**Piping -** Verify hot water piping is electric resistance, welded or seamless, schedule 40, black steel pipe conforming to ASTM A53. Piping 100mm (4 inch) and smaller may be ASTM B 88 Type K or L copper.	A	RA	—
		Submittal Process	**Steel fittings - For piping 50mm (2 inch) and smaller**, verify provided ANSI/ASME B16.3 malleable iron screwed fittings **OR** ASME B16.11 socket welding (Class 3000) fittings OR ASME B16.11 threaded type (Class 2000)	A	RA	—
		Submittal Process	**Steel fittings - For piping 63 mm (2-1/2 inch) and larger**, verify provided ANSI/ASME B16.9 butt-welding fittings **OR** ANSI/ASME B16.5 flanged type	A	RA	—
		Submittal Process	**Copper fittings -** Verify ANSI B16.18 cast bronze solder joint type or ASME/ANSI B16.22 wrought copper solder joint type	A	RA	—

KEY = A - Approve, R - Review, W - Witness, RA - Receipt Acknowledge, S - Surveilance Review, V- Verification and Testing, C - Copy, QA - Quality Assurance

MECHANICAL ENGINEERING ROLES and RESPONSIBILITIES

System	Sub-Systems	Phase	Elements	ME QC / DOR (Ktr)	FEAD (SIOH)	FEC (PCAS)
Energy Supply Systems (continued)		Submittal Process/ Field Visit	**Insulation -** Verify hot water piping insulated with mineral fiber insulation with factory-applied all-purpose jacket	A	RA/ QA	—
		Field Visit	**Isolation valves** - Verify equipment provided with isolation valves for service and repairs	A	QA	—
		Submittal Process/ Field Visit	**Valves -** Verify appropriately sized	A	RA/ QA	—
		Submittal Process/ Field Visit	**Balancing valves -** Verify provided and appropriately sized to balance water flow	A	RA/ QA	QA
		Field Visit	**Appurtenances -** Verify provided (such as air separators, expansion tanks, suction diffusers, strainers, etc)	A	QA	—
		Field Visit	**Test ports -** Verify provided in piping at inlet and outlet of all major system components including boilers, pumps, etc)	A	QA	QA
		Field Visit	Verify all valves and test ports are accessible for service and maintenance	A	QA	—
	Chilled Water & Condenser Water - Exterior Underground	Submittal Process	Verify system provided is direct buried, factory-prefabricated, pre-insulated, chilled water piping systems. Verify all fittings and accessories are designed and factory-fabricated to prevent moisture from entering into the system by manufacturer.	A	RA	S
		Field Visit	Verify backfill and overall installation meets the requirements of the piping system manufacturer.	A	QA	—
		Field Visit	**Isolation Valves -** Verify supply and return line isolation valves are provided at take-offs for service to each building in valve boxes.	A	QA	—
		Submittal Process/ Field Visit	Verify expansion loops are provided to compensate for piping expansion. Verify anchors are provided outside manholes.	A	RA/ QA	S
	Chilled Water & Condenser Water - Exterior Aboveground	Submittal Process	**Piping -** Verify chilled and condenser water piping are either electric resistance welded or seamless Schedule 40 black steel pipe conforming to ASTM A 53 or, for piping 100 mm (4 inch) and smaller, ASTM B 88 Type K or L copper.	A	RA	—
		Submittal Process	If steel piping is used, verify for piping 50 mm (2 inch) and smaller, ANSI/ASME B16.3 malleable iron screwed fittings or ASME B16.11 socket welding (Class 3000) or threaded type (Class 2000) fittings are provided. For piping 63 mm (2-1/2 inch) and large	A	RA	—
		Submittal Process	If copper piping is used, verify ANSI B16.18 cast bronze solder joint fittings or ASME/ANSI B16.22 wrought copper solder joint fittings are provided.	A	RA	—
		Submittal Process/ Field Visit	**Piping Insulation -** Verify piping insulation is either Mineral fiber, Urethane, cellular glass, Faced Phenolic Foam, or Flexible Cellular pipe insulation as indicated in submitted shop drawings.	A	RA/ QA	—

KEY = A - Approve, R - Review, W - Witness, RA - Receipt Acknowledge, S - Surveilance Review, V- Verification and Testing, C - Copy, QA - Quality Assurance

MECHANICAL ENGINEERING ROLES and RESPONSIBILITIES

System	Sub-Systems	Phase	Elements	ME QC / DOR (Ktr)	FEAD (SIOH)	FEC (PCAS)
Energy Supply Systems (continued)		Field Visit	**Piping Insulation -** Verify the piping system insulation thickness is in accordance with contract requirements.	A	QA	—
		Field Visit	**Piping Insulation -** Verify piping insulation is covered with an aluminum jacket.	A	QA	—
		Submittal Process/ Field Visit	Verify the use of either MSS SP-58 or MSS SP-69 adjustable supports with insulation protection saddles. Verify roller supports utilize stainless steel axles.	A	RA/ QA	—
		Field Visit	**Support Poles -** Verify support poles are installed with guy wires and necessary hardware.	A	QA	—
		Submittal Process/ Field Visit	**Pipe Expansion -** Verify pipe expansion is compensated by utilizing either expansion loops, guided slip expansion joints, or flexible ball type expansion joints.	A	RA/ QA	S
	Chilled Water & Condenser Water - Interior	Submittal Process	**Aboveground chilled & condenser water piping -** Verify aboveground chilled water piping is electric resistance welded or seamless schedule 40 black steel pipe conforming to ASTM A 53. Piping 100mm (4 inch) and smaller may be ASTM B 88 Type K or L copper.	A	RA	—
		Submittal Process	**Steel pipe fittings - For piping 50mm (2 inch) and smaller -** Verify provided ANSI/ASME B16.3 malleable iron screwed fittings or ASME B16.11 socket welding (Class 3000) or threaded type (Class 2000).	A	RA	—
		Submittal Process	**Steel pipe fittings - For piping 63mm (2-1/2 inch) and larger -** Verify provided ASME/ANSI B16.9 butt-welding fittings or ASME/ANSI B16.5 flanged type.	A	RA	—
		Submittal Process	**Steel pipe fittings -** Grooved joint pipe coupling systems of appropriate pressure rating are acceptable in lieu of welded or screwed fittings	A	RA	—
		Submittal Process	**Copper fittings -** Verify provided ANSI B16.18 cast bronze solder joint type or ASME/ANSI B16.22 wrought copper solder joint type	A	RA	—
		Field Visit	**Isolation valves -** Verify isolation valves provided on supply and return lines at take-offs for service to each building	A	QA	—
		Field Visit	**Isolation valves -** Verify isolation valves located in valve boxes	A	QA	—
		Submittal Process/ Field Visit	**Insulation -** Verify above-ground chilled water piping insulated with cellular glass insulation. Flexible unicellular insulation may be used on small piping runouts.	A	RA/ QA	—
		Submittal Process/ Field Visit	**Insulation -** Verify above-ground condenser water piping insulated with mineral fiber insulation	A	RA/ QA	—
		Submittal Process/ Field Visit	**Insulation -** Verify all-purpose jacket with vapor retarder provided for above-ground chilled water and condenser piping	A	RA/ QA	—
		Submittal Process/ Field Visit	**Valves -** Verify appropriately sized	A	RA/ QA	—

KEY = A - Approve, R - Review, W - Witness, RA - Receipt Acknowledge, S - Surveilance Review, V- Verification and Testing, C - Copy, QA - Quality Assurance

MECHANICAL ENGINEERING ROLES and RESPONSIBILITIES

System	Sub-Systems	Phase	Elements	ME QC / DOR (Ktr)	FEAD (SIOH)	FEC (PCAS)
Energy Supply Systems (conti		Submittal Process/ Field Visit	**Balancing valves -** Verify provided and appropriately sized to balance water flow	A	RA/ QA	QA
		Submittal Process/ Field Visit	**Relief valves -** Verify provided and appropriately sized	A	RA/ QA	—
		Field Visit	**Test ports -** Verify test ports provided inpiping at inlet and outlet of all major system components including chillers, pumps, etc	A	QA	QA
		Field Visit	Verify all valves and test ports are accessible for service and maintenance	A	QA	—
	AHU's - ALL	Field Visit	**DDC Sensors -** Confirm location of DDC sensors (temp, SP, Freeze, High pressure SP, AFM), if required	A	QA	QA
		Field Visit	**Smoke Detectors -** Confirm location of smoke detectors (if over 2000 cfm)	A	QA	QA
		Field Visit	**Testing - Filters -** Confirm filters are clean prior to testing	A	QA	QA
		Field Visit	**Filters -** Confirm filters are installed	—	—	—
		Field Visit	**Belts -** Confirm belt tightness and alignment	A	QA	QA
		Field Visit	**Coils -** Confirm all coils are clean	A	QA	QA
		Field Visit	**Vibration Isolators -** Confirm vibration isolators installed according to contract docs and unit secured	A	QA	QA
		Field Visit	**Damper -** Confirm damper operation and assembly tightness	A	QA	QA
		Field Visit	**Motor -** Confirm motor size (HP), voltage, amperage, and rpm	A	QA	QA
		Submittal Process	**Fans -** Verify provided have AMCA 210 certified fans with AMCA seal	A	QA	—
		Field Visit	**Fans -** Confirm fan rpm and rotation direction	A	QA	QA
		Field Visit	**OA Intake Plenum -** Confirm OA intake plenum configuration provides for drainage	A	QA	QA
		Field Visit	**AFM -** Confirm air flow monitoring station location in conformance with manufacturer requirements	A	QA	QA
		Field Visit	**Size -** Confirm unit matches schedule req	A	QA	QA
		Submittal Process/ Field Visit	**Fan bearings -** Verify fan bearings were greased (if req) and have min average life of 200,000 hours at design operating conditions	A	RA/ QA	—
		Field Visit	**Birdscreens -** Verify birdscreens provided for outdoor inlets and outlets	A	QA	QA
		Field Visit	Verify all filter and access doors are accessible for service and maintenance	A	QA	—
		Field Visit	Verify provided are modular construction, double wall AHU's with min of 25mm (1 inch) casing insulation	A	QA	—
		Submittal Process	Verify provided have ARI 430 certified fans and ARI certified coils	A	RA	—

KEY = A - Approve, R - Review, W - Witness, RA - Receipt Acknowledge, S - Surveilance Review, V- Verification and Testing, C - Copy, QA - Quality Assurance

MECHANICAL ENGINEERING ROLES and RESPONSIBILITIES

System	Sub-Systems	Phase	Elements	ME QC / DOR (Ktr)	FEAD (SIOH)	FEC (PCAS)
Equipment & Components (continued)		Submittal Process/ Field Visit	**Drain pan -** Verify provided has stainless steel, positive draining condensate drain pan	A	RA/ QA	—
		Submittal Process	**For 100% OA units -** Verify capability provided for cooling, heating, dehumidification, and reheat	A	RA	—
		Submittal Process/ Field Visit	**Ultraviolet disinfection system -** Verify central station ahu's provided with an ultraviolet c-band (UVC) disinfection system for mold, bacteria, and odor control in each air handler that has a chilled water or DX cooling coil	A	RA/ QA	—
		Submittal Process/ Field Visit	**Ultraviolet disinfection system -** Verify irradiation emitters and fixtures installed in sufficient quantity and in such an arrangement so as to provide an equal distribution of UVC energy on the coil and in the drain pan	A	RA/ QA	—
		Submittal Process/ Field Visit	**Ultraviolet disinfection system -** Verify the UVC energy produced has the lowest possible reflected and shadowed losses (To maintain energy efficiency)	A	RA/ QA	—
		Submittal Process/ Field Visit	**Ultraviolet disinfection system -** For energy efficiency, verify power supplies are of the high efficiency electronic type and matched to the emitter	A	RA/ QA	—
		Submittal Process/ Field Visit	**Ultraviolet disinfection system -** For intensity, verify the minimal UVC energy striking the leading edge (if nstalled upstream) or trailing edge (if installed downstream) of all the coil fins is not less than 820 uW/cm2 at the closest point and through pl	A	RA/ QA	—
		Submittal Process/ Field Visit	**Ultraviolet disinfection system -** Verify equal amounts strike the drain pan, either directly or indirectly through reflection	A	RA/ QA	—
		Submittal Process/ Field Visit	**Ultraviolet disinfection system -** For installation, verify emitters and fixtures are installed at right angles to the conforming lines of the coil fins, such that through incident angle reflection, UVC energy bathes all surfaces of the coil and drain pan	A	RA/ QA	—
		Submittal Process/ Field Visit	**Ultraviolet disinfection system -** Verify one complete set of spare bulbs supplied	A	RA/ QA	—
	AHU's - Split System	Submittal Process	Verify provided is factory assembled, packaged AHU rated in accordance with ARI 210/240 or ARI 340/360	A	RA	—
		Field Visit	Verify matching components provided are from the same manufacturer	A	QA	—
	AHU's - Rooftop	Submittal Process/ Field Visit	Verify provided is factory packaged unit in accordance with ARI 430 and suitable for outdoor installation	A	RA/ QA	—
		Field Visit	**Roof Curb -** Verify provided with manufacturer's roof curb	A	QA	—

KEY = A - Approve, R - Review, W - Witness, RA - Receipt Acknowledge, S - Surveilance Review, V- Verification and Testing, C - Copy, QA - Quality Assurance

MECHANICAL ENGINEERING ROLES and RESPONSIBILITIES

System	Sub-Systems	Phase	Elements	ME QC / DOR (Ktr)	FEAD (SIOH)	FEC (PCAS)
nent & Components (continued)	**Roof Curbs**	Field Visit	**Mounting Surface -** Confirm fan or unit mounting surface is parallel to the horizon, not the roof deck if sloped	A	QA	—
		Field Visit	**Waterproofing -** Confirm curb has been flashed properly and seal to the roofing material (no leaks) (waterproofing)	A	QA	—
		Field Visit	**Lightning Rods -** Confirm lightning rods have been attached to units and run to ground	A	QA	—
		Field Visit	**Insulation -** Confirm roof curb is insulated	A	QA	—
		Field Visit	**Size -** Confirm curb is the same size or smaller as the unit being placed on it (tight fit)	A	QA	—
	Fans - ALL	Submittal Process/ Field Visit	Verify fans are AMCA 210 certified with AMCA seal	A	RA/ QA	—
		Submittal Process	**Fan bearings -** Verify fan bearings have min average life of 200,000 hours at design operating conditions	A	RA	—
		Field Visit	**Rotation -** Confirm rotation and alignment	A	QA	QA
		Field Visit	**Belts -** Confirm belt tightness (if provided)	A	QA	QA
		Field Visit	**Motor -** Confirm HP, voltage, amperage	A	QA	QA
		Field Visit	**Size -** Confirm size matches schedule req	A	QA	QA
		Field Visit	Verify fans are accessible for service and maintenance	A	QA	
		Field Visit	**Birdscreens -** Verify bird screens provided for outdoor inlets and outlets	A	QA	QA
		Field Visit	**DDC -** Verify fans provided with means for verifying operation via DDC system	A	QA	QA
	Exhaust Fans (Roof)	Field Visit	**Roof Curb -** Confirm lag bolted to roof curb	A	QA	QA
		Field Visit	**Dome Top -** Confirm dome top is secured	A	QA	QA
		Field Visit	**Type -** Verify centrifugal fans provided	A	QA	
	In-line Fans	Field Visit	**Vibration Isolators -** Confirm hangers & isolation devices	A	QA	QA
		Field Visit	**Flex Connection -** Confirm flexible connection to ductwork	A	QA	QA
		Field Visit	**Speed Controller -** Confirm speed controller installation (if provided)	A	QA	QA
		Field Visit	**Access Panel -** Confirm access panel located properly	A	QA	QA
		Field Visit	**Type -** Verify centrifugal fans provided	A	QA	—
	Wall Fans	Field Visit	**Type -** Verify wall fans provided are propeller fans with fan guards	A	QA	—
		Field Visit	**Type -** Verify wall fans provided are centrifugal fans with backdraft dampers and wall bracket	A	QA	—
	Bathroom Fan	Submittal Process/ Field Visit	Verify provided are UL 507 and UL-Listed, Home Ventilating Institute (HVI) certified, and with AMCA seal for ceiling installation	A	RA/ QA	—

KEY = A - Approve, R - Review, W - Witness, RA - Receipt Acknowledge, S - Surveilance Review, V- Verification and Testing, C - Copy, QA - Quality Assurance

MECHANICAL ENGINEERING ROLES and RESPONSIBILITIES

System	Sub-Systems	Phase	Elements	ME QC / DOR (Ktr)	FEAD (SIOH)	FEC (PCAS)
Equipm	**Range Hoods**	Submittal Process/ Field Visit	Verify provided are UL 507 and UL-Listed, with AMCA seal	A	RA/ QA	—
		Submittal Process/ Field Visit	**Light -** Verify provided with light over stove	A	RA/ QA	—
		Submittal Process	Verify min fan capacity is 160 cfm with max sound level of 5.6 sones	A	RA	—
	Louvers & Hoods - ALL	Submittal Process	**Louver rating** - Verify louvers bear AMCA ratings seal for air performance and water penetration in accordance with AMCA 500 and AMCA 511	A	RA	—
		Submittal Process/ Field Visit	**Construction** - Verify hoods and louvers constructed of anodized aluminum alloy or stainless steel	A	RA/ QA	
		Submittal Process/ Field Visit	**Birdscreens** - Verify provided for louvers and hoods	A	RA/ QA	QA
	Intake Hood (Roof)	Submittal Process/ Field Visit	**Type -** Confirm type as specified	A	RA/ QA	QA
		Field Visit	Confirm top is secured	A	QA	QA
		Submittal Process/ Field Visit	**Size -** Confirm size matches schedule req (free area)	A	RA/ QA	QA
	OA Intake Louvers (Wall)	Submittal Process/ Field Visit	**Type -** Confirm type as specified	A	RA/ QA	QA
		Submittal Process/ Field Visit	**Size -** Confirm size matches schedule req (free area)	A	RA/ QA	QA
		Submittal Process/ Field Visit	Confirm waterproof (when req) and velocity when water carry-over occurs	A	RA/ QA	QA
		Field Visit	**Intake Plenum -** Confirm intake plenum is sloped back to louver or drain has been provided	A	QA	QA
		Field Visit	**Damper -** Confirm opposed blade damper with actuator has been provided	A	QA	QA
		Field Visit	**AFM -** Confirm air flow monitoring type louver has been provided, if req	A	QA	QA

KEY = A - Approve, R - Review, W - Witness, RA - Receipt Acknowledge, S - Surveilance Review, V- Verification and Testing, C - Copy, QA - Quality Assurance

MECHANICAL ENGINEERING ROLES and RESPONSIBILITIES

System	Sub-Systems	Phase	Elements	ME QC / DOR (Ktr)	FEAD (SIOH)	FEC (PCAS)
Equipment & Components (continued)	**Ductwork**	Field Visit	**Construction -** Except as specified herein, verify ductwork constructed, braced, reinforced, installed, supported, and sealed per SMACNA standards	A	QA	QA
		Field Visit	Verify all dampers are accessible for service and maintenance	A	QA	—
		Field Visit	Confirm general construction conforms to contract documents	A	QA	QA
		Field Visit	Confirm correct pressure rating of ductwork has been conformed to SMACNA	A	QA	QA
		Field Visit	Confirm ductwork has been sealed in accordance with specified seal class	A	QA	QA
		Field Visit	**VAV inlet -** Confirm minimum straight duct is 6 duct diameters and same size as VAV terminal inlet	A	QA	QA
		Field Visit	Confirm DALT allowables are met	A	QA	QA
		Submittal Process/ Field Visit	**Access Doors -** Confirm access doors have been provided before every elbow with turning vanes	A	RA/ QA	QA
		Submittal Process/ Field Visit	**Access Doors -** Confirm access doors provided at appropriate locations	A	RA/ QA	QA
		Field Visit	**Flexible duct** - Verify insulated flexible duct used only to adapt to minor offsets for connections to air distribution devices	A	QA	QA
		Submittal Process	**Flexible duct** - Verify is UL 181 listed and per SMACNA DCS with minimum R value of 4	A	RA	—
		Field Visit	**Flexible duct** - Verify maximum length is 2 meters (6 feet)	A	QA	QA
		Field Visit	**Flexible Duct -** Confirm, where flexible ductwork is specified, that the length of flex ductwork is provided to the max req length or less and is supported properly with no abrupt turns (ie: as straight as possible)	A	QA	QA
		Field Visit	**Flexible connectors** - Verify provided between fans and ducts	A	QA	QA
		Submittal Process/ Field Visit	**Damper -** Confirm balancing damper at branch take-off's, not at diffuser neck	A	RA/ QA	QA
		Submittal Process/ Field Visit	**Damper -** Confirm balancing damper construction conforms to the specified seal class	A	RA/ QA	QA
		Submittal Process/ Field Visit	**Damper -** Confirm discharge damper installed on VAV terminal discharge, if req	A	RA/ QA	QA
		Field Visit	**Damper -** Confirm control damper type and location along with actuator type	A	QA	QA
		Submittal Process	**Dampers** - Verify conforms to SMACNA DCS	A	RA	—
		Submittal Process	**Fire dampers** - Verify are rated per UL 555	A	RA	—
		Submittal Process	**Fire dampers** - Verify are dynamic type rated for closure against a moving airstream	A	RA	—

KEY = A - Approve, R - Review, W - Witness, RA - Receipt Acknowledge, S - Surveilance Review, V- Verification and Testing, C - Copy, QA - Quality Assurance

MECHANICAL ENGINEERING ROLES and RESPONSIBILITIES

System	Sub-Systems	Phase	Elements	ME QC / DOR (Ktr)	FEAD (SIOH)	FEC (PCAS)
ent & Components (continued)		Submittal Process/ Field Visit	**Fire dampers** - Verify do not intrude into air stream when in open position	A	RA/ QA	—
		Submittal Process	**Smoke dampers** - Verify are rated per UL 555S	A	RA	—
		Submittal Process/ Field Visit	**Elbows** - Confirm correct elbow type (ie: double wall turning vane, 1.5 radius curved, etc)	A	RA/ QA	QA
		Field Visit	**Bracing** - Confirm proper bracing of high pressure ductwork in accordance with SMACNA	A	QA	QA
		Field Visit	**Filters** - Confirm access to filter rack for ease of filter change out in duct mounted assemblies	A	QA	QA
		Submittal Process/ Field Visit	**Insulation** - Confirm ductwork insulated properly (ext batt, hard, int lined, double wall insulated, etc)	A	RA/ QA	QA
		Field Visit	**Insulation** - Inspect vapor barrier of insulation	A	QA	—
		Field Visit	**Hangers** - Confirm proper duct hangers have been utilized in accordance with spec req	A	QA	QA
		Field Visit	**Vibration Isolators** - Confirm the use of vibration isolation material at unit connection to ductwork free of holes (no leakage)	A	QA	QA
		Submittal Process	**Sound attenuators** - Verify fabricated sound attenuators reduces the rated sound pressure level of the fan down to at least 65 decibels in the 250 Hz (third octave band) center frequency by using a reference sound source calibrated in decibels of sound pow	A	RA	—
		Submittal Process/ Field Visit	**Sound attenuators** - Verify pressure drop does not exceed 157 Pa (0.63 inch of water)	A	RA/ QA	QA
	VAV Boxes - ALL	Submittal Process	Verify units are pressure-independent type and rated per ARI 880	A	QA	—
		Field Visit	**Primary air valve** - Verify not allowed to fully shut-off	A	QA	QA
		Field Visit	**Heating coil** - Verify each box provided with heating coil unless not required by space reheat or heating	A	QA	—
		Field Visit	Verify all VAV box control panels are accessible	A	QA	
		Field Visit	**Electronic controls** - Verify are provided	A	QA	QA
	VAV Terminal Box (Fan-Powered)	Submittal Process	**Type** - Verify units are pressure-independent, fan powered, rated per ARI 880, and UL listed	A	QA	—
		Field Visit	**Filters** - Confirm filter installed and clean	A	QA	QA
		Field Visit	Confirm ductwork on primary inlet is installed with 6 straight duct diameters the same size as the inlet	A	QA	QA
		Submittal Process/ Field Visit	**Dampers** - Confirm discharge damper has been provided and/or coordinated with sheet metal contractor	A	QA	QA
		Field Visit	Confirm fan size & primary inlet sized in accordance with contract documents	A	QA	—
		Field Visit	**Primary Air Valve** - Confirm max/min setting of primary air valve	A	QA	QA
		Field Visit	**Primary air valve** - Verify not allowed to fully shut-off	A	QA	QA

KEY = A - Approve, R - Review, W - Witness, RA - Receipt Acknowledge, S - Surveilance Review, V- Verification and Testing, C - Copy, QA - Quality Assurance

MECHANICAL ENGINEERING ROLES and RESPONSIBILITIES

System	Sub-Systems	Phase	Elements	ME QC / DOR (Ktr)	FEAD (SIOH)	FEC (PCAS)
Equipment		Field Visit	**Size** - Confirm size matches schedule req	A	QA	QA
		Field Visit	**Motor** - Confirm HP, voltage, and amperage of fan motor	A	QA	QA
		Field Visit	**Heating coil** - Verify each box provided with heating coil, if required	A	QA	—
		Field Visit	**Reheat Coils** - Confirm reheat coil size, if req	A	QA	—
		Field Visit	**Reheat Coils** - Confirm reheat coil is piped properly	A	QA	QA
		Field Visit	**Sensors** - Confirm discharge temp sensor provided, if req	A	QA	QA
		Field Visit	Confirm hangers have provisions for vibration isolation	A	QA	QA
		Field Visit	**Electronic controls** - Verify provided with speed controller, discharge volume control damper(s), and return/recirculation air frame and filter	A	QA	QA
		Submittal Process	**Insulation** - Verify in accordance with ASHRAE 90.1	A	RA	—
	VAV Terminal Box (Shut Off)	Field Visit	Confirm ductwork on primary inlet is installed with 6 straight duct diameters the same size as the inlet	A	QA	QA
		Field Visit	**Primary Air Valve** - Confirm max and min setting of primary air valve	A	QA	QA
		Field Visit	**Reheat Coils** - Confirm reheat coil size, if req	A	QA	
		Field Visit	**Reheat Coils** - Confirm reheat coil in piping properly	A	QA	QA
		Field Visit	**Sensors** - Confirm discharge temp sensor provided, if req	A	QA	QA
		Field Visit	Confirm hangers have provisions for vibration isolation	A	QA	QA
		Field Visit	**Size** - Confirm box size matches schedule req	A	QA	QA
	DX VAV Units	Submittal Process	**Finish** - If indicated in ESR Section D30, verify anti-corrosion coating provided is immersion applied, baked phenolic, or other approved coating. Field applied coatings not acceptable.	A	QA	—
		Submittal Process/ Field Visit	**Direct expansion equipment** - Verify is specifically designed and manufactured for VAV applications	A	RA/ QA	—
		Submittal Process/ Field Visit	**Equipment** - Verify from the same manufacturer (central air handling units, VAV boxes/ zone dampers, and zone controls)	A	RA/ QA	—
		Field Visit	**Evaporator coils** - Verify airflow through evaporator coils is not modulated	A	QA	—
		Field Visit	**Zone control damper units** - Verify duct mounted zone control damper units provided with integral control box designed for use with DX VAV packaged systems	A	QA	—
		Submittal Process/ Field Visit	**Air diffusers** - Verify self-modulating air diffusers are not used	A	RA/ QA	—
	Condensing Units	Submittal Process/ Field Visit	**Finish** - If indicated in ESR Section D30, verify anti-corrosion coating provided is immersion applied, baked phenolic, or other approved coating. Field applied coatings not acceptable.	A	RA/ QA	—
		Submittal Process	**Air conditioner** - Verify air-cooled, split system air conditioner provided with ducted air distribution	A	QA	—

KEY = A - Approve, R - Review, W - Witness, RA - Receipt Acknowledge, S - Surveilance Review, V- Verification and Testing, C - Copy, QA - Quality Assurance

MECHANICAL ENGINEERING ROLES and RESPONSIBILITIES

System	Sub-Systems	Phase	Elements	ME QC / DOR (Ktr)	FEAD (SIOH)	FEC (PCAS)
Equipment & Components (continued)		Submittal Process	**Construction and rating** - Verify units are factory assembled, designed, tested, and rated in accordance with ARI 210/ 240 or ARI 340/ 360	A	QA	—
		Submittal Process/ Field Visit	**Clearance** - Verify manufacturer's minimum recommended clearance around condensing units is provided	A	RA/ QA	QA
		Field Visit	**Refrigerant piping size** - Verify is per manufacturer's recommendations	A	QA	—
	Heat Pumps - Ground Source	Submittal Process/ Field Visit	**Finish** - If indicated in ESR Section D30, verify anti-corrosion coating provided is immersion applied, baked phenolic, or other approved coating. Field applied coatings not acceptable.	A	RA/ QA	—
		Submittal Process	**Construction and rating** - Verify units are factory assembled, designed, tested, and rated in accordance with ARI 330	A	QA	—
		Submittal Process	**Heat exchanger** - Verify connected to heat exchanger by closed loop ground source vertical well field	A	RA	—
		Submittal Process/ Field Visit	**Well field** - Verify design and installation of each well field comply with IGSHPA and ASHRAE standards	A	RA/ QA	—
	Heat Pumps - Water Source	Submittal Process/ Field Visit	**Finish** - If indicated in ESR Section D30, verify anti-corrosion coating provided is immersion applied, baked phenolic, or other approved coating. Field applied coatings not acceptable.	A	RA/ QA	—
		Submittal Process	**Construction and rating** - Verify units are factory assembled, designed, tested, and rated in accordance with ARI 210/ 240 or ARI 340/ 360	A	QA	—
	Heat Pumps - Air to Air	Submittal Process/ Field Visit	**Finish** - If indicated in ESR Section D30, verify anti-corrosion coating provided is immersion applied, baked phenolic, or other approved coating. Field applied coatings not acceptable.	A	RA/ QA	—
		Submittal Process	**Heat pumps** - Verify air-cooled, split system heat pumps provided with ducted air distribution	A	RA/ QA	—
		Submittal Process	**Construction and rating** - Verify units are factory assembled, designed, tested, and rated in accordance with ARI 210/ 240 or ARI 340/ 360	A	QA	QA
		Field Visit	**Clearance** - Verify manufacturer's minimum recommended clearance around condensing units is provided	A	QA	—
		Field Visit	**Refrigerant piping size** - Verify is per manufacturer's recommendations	A	QA	QA
		Field Visit	**Insulation** - Verify provided for refrigerant piping suction lines and condensate drain	A	QA	—
	Condensate Return Units	Submittal Process/ Field Visit	Verify has floor-mounted receiver and duplex pump unit	A	RA/ QA	—

KEY = A - Approve, R - Review, W - Witness, RA - Receipt Acknowledge, S - Surveilance Review, V- Verification and Testing, C - Copy, QA - Quality Assurance

MECHANICAL ENGINEERING ROLES and RESPONSIBILITIES

System	Sub-Systems	Phase	Elements	ME QC / DOR (Ktr)	FEAD (SIOH)	FEC (PCAS)
Equipment & Components (continued)	**Equipment Thermal Insulation**	Submittal Process/ Field Visit	**Insulation** - Verify insulation provided for hot and chilled water pumps and equipment as suitable for the temperature and service fit as closely as possible to equipment. May be rigid block, semi-rigid board, or flexible unicellular insulation.	A	RA/ QA	QA
			Vapor retarder - Verify provided for chilled water applications	A	QA	—
	Auxilliary Equipment	Submittal Process/ Field Visit	**Steam-to-hot-water converter** - Verify provided as required for application	A	RA/ QA	—
		Submittal Process	**Heat exchangers** - Verify factory assembled u-tube units provided constructed in accordance with ASME BPVC for steam or hot water. For hot water, plate type heat exchangers may be provided.	A	RA	—
	Furnaces	Submittal Process/ Field Visit	**Construction** - Confirm provided furnace is UL-listed, factory assembled, self-contained, and forced circulation	A	RA/ QA	QA
		Submittal Process/ Field Visit	**Electronic ignition system** - Verify provided	A	RA/ QA	—
		Submittal Process/ Field Visit	**Gas furnace rating** - Confirm unit is design certified by AGA and GAMA efficiency rating certified for gas furnaces.	A	RA/ QA	—
		Submittal Process/ Field Visit	**Oil furnace rating** - Confirm unit meets requirements for NFPA 31 for oil furnaces.	A	RA/ QA	—
		Submittal Process/ Field Visit	**Cooling coil** - Verify provided, if necessary	A	RA/ QA	—
	Unit Ventilators	Submittal Process/ Field Visit	Verify unit is a factory assembled unit ventilator capable of up to 100% OA ventilation and UL-Listed	A	RA/ QA	—
	Unit Heaters	Submittal Process/ Field Visit	See D302004 for gas fired unit heaters	A	RA/ QA	—
	Unit Heaters-Steam	Submittal Process/ Field Visit	Verify provided is UL-Listed and factory assembled	A	RA/ QA	—
	Unit Heaters - Hot Water	Submittal Process/ Field Visit	Verify provided is UL-Listed and factory assembled	A	RA/ QA	—
	Unit Heaters - Cabinet	Submittal Process/ Field Visit	Verify provided is UL-Listed and factory assembled	A	RA/ QA	—

KEY = A - Approve, R - Review, W - Witness, RA - Receipt Acknowledge, S - Surveilance Review, V- Verification and Testing, C - Copy, QA - Quality Assurance

MECHANICAL ENGINEERING ROLES and RESPONSIBILITIES

System	Sub-Systems	Phase	Elements	ME QC / DOR (Ktr)	FEAD (SIOH)	FEC (PCAS)
	Fuel-Fired Unit Heaters - Gas	Submittal Process/ Field Visit	Verify meets requirements for ANSI Z83.8 and AGA label	A	RA/ QA	—
		Submittal Process/ Field Visit	**Discharge louver** - Verify each heater equipped with individually adjustable package discharge louver	A	RA/ QA	QA
		Submittal Process/ Field Visit	**Thermostat** - Verify provided	A	RA/ QA	QA
	Fuel-Fired Unit Heaters - Infrared	Submittal Process/ Field Visit	Verify meets requirements for ANSI Z83.8 and AGA label	A	RA/ QA	—
	Unit Heaters - Electric	Submittal Process/ Field Visit	Verify provided are factory assembled, UL-1025	A	RA/ QA	—
	Heaters - Baseboard	Submittal Process/ Field Visit	Verify provided are factory assembled, UL-1042	A	RA/ QA	—
	Heaters - Wall	Submittal Process/ Field Visit	Verify provided are factory assembled, UL-1025, cabinet heaters	A	RA/ QA	—
	Heaters - Infrared	Submittal Process/ Field Visit	Verify provided are factory assembled, UL-Listed and labeled heaters	A	RA/ QA	—
	Fin Tube Radiators & Convectors	Submittal Process	Verify fin tube radiators and convectors provided with copper tubes and aluminum fins	A	RA	—
		Submittal Process	**Control Valves -** Verify control valves provided are normally open, spring return	A	RA/ QA	QA
	Duct Heater	Submittal Process/ Field Visit	Verify provided is factory assembled, UL-Listed heater	A	RA/ QA	—
		Field Visit	Verify adequate duct length is provided per manufacturer's recommendations upstream & downstream	A	QA	—
		Submittal Process/ Field Visit	Verify control cabinet and heating coil provided	A	RA/ QA	—
	Pumps - ALL	Submittal Process/ Field Visit	Verify provided are centrifugal circulating pumps with motor, motor starter, and motor enclosure conforming to the appropriate NEMA standards	A	RA/ QA	—
		Field Visit	**Insulation -** Verify pumps used for hot service and chilled water service are insulated	A	QA	QA

KEY = A - Approve, R - Review, W - Witness, RA - Receipt Acknowledge, S - Surveilance Review, V- Verification and Testing, C - Copy, QA - Quality Assurance

MECHANICAL ENGINEERING ROLES and RESPONSIBILITIES

System	Sub-Systems	Phase	Elements	ME QC / DOR (Ktr)	FEAD (SIOH)	FEC (PCAS)
Equipment & Components (continued)	**Pumps - Base-mounted**	Field Visit	Confirm size and nameplate data matches schedule req	A	QA	QA
		Field Visit	Verify voltage service matches nameplate	A	QA	QA
		Field Visit	Verify provided are single-stage end suction pumps suitable for chilled, condenser, and hot water heating systems	A	QA	QA
		Field Visit	**Isolation Base -** Confirm isolation base is provided where req	A	QA	QA
		Field Visit	**Insulation -** Confirm insulation enclosure is provided where req	A	QA	QA
		Field Visit	Confirm pressure taps, gages, and shutoffs have been provided in the specified locations	A	QA	QA
		Field Visit	**Balancing Valves -** Confirm the balancing valves have been provided in accordance with manufacturers recommendations and/or in accordance with the appropriate contract document detail	A	QA	QA
		Field Visit	**Balancing Valves -** Confirm balancing valves provided with proper clearances	A	QA	QA
		Field Visit	**Rotation -** Verify rotation direction is correct	A	QA	QA
		Field Visit	**Suction diffusers -** Verify suction diffusers provided on base-mounted pumps	A	QA	QA
	Pumps - In-line	Field Visit	**Location -** Confirm location is correct(ie: in accordance with the contract documents)	A	QA	QA
		Field Visit	Verify constructed of manufacturer's standard materials suitable for chilled, condenser, and hot water heating systems	A	QA	QA
		Field Visit	Confirm voltage provided is correct	A	QA	QA
		Field Visit	**Valve Arrangement -** Confirm valve arrangement around the pump is correct	A	QA	QA
		Field Visit	**Balancing Valve -** Confirm balancing valve has been provided in accordance with the contract documents, if req	A	QA	QA
		Field Visit	**Balancing Valve -** Confirm balancing valves provided with proper clearances	A	QA	QA
	Diffusers, Registers, & Grilles	Field Visit	Confirm location, size, and type have been provided in accordance with the contract documents	A	QA	QA
		Field Visit	**Dampers -** Confirm branch balancing dampers have been provided and dampers, if any, provided with the air device are in the wide open position	A	QA	QA
		Field Visit	**Finish** - Verify are factory-finished	A	QA	—
		Field Visit	**Exterior and exposed edges** - Verify are rolled, or otherwise stiffened and rounded	A	QA	—
	Pipe Sleeves	Field Visit	Verify pipe sleeves provided at each wall and floor penetration	A	QA	—
		Field Visit	Verify sleeves are of a material suitable to protect the carrier pipe (2 pipe sizes larger) and sealed with an appropriate flexible material	A	QA	—

KEY = A - Approve, R - Review, W - Witness, RA - Receipt Acknowledge, S - Surveilance Review, V- Verification and Testing, C - Copy, QA - Quality Assurance

MECHANICAL ENGINEERING ROLES and RESPONSIBILITIES

System	Sub-Systems	Phase	Elements	ME QC / DOR (Ktr)	FEAD (SIOH)	FEC (PCAS)
Equipment & Components (continued)		Submittal Process/ Field Visit	**Fire Stopping -** In fire rated walls, verify fire stopping provided inaccordance with IBC	A	RA/ QA	—
	Piping Identification	Field Visit	Verify piping provided with identification labels or stencil names or code letters for piping systems in clearly visible letters and symbols	A	QA	—
		Field Visit	Verify arrow-shaped markings provided to indicate direction of flow	A	QA	QA
	Piping - Condensate Drain	Submittal Process/ Field Visit	Verify condensate drain piping provided is ASTM B 88, Type M or L, hard drawn copper	A	RA/ QA	—
	Piping	Field Visit	**Flushing -** Confirm/ witness pipe flushing (make sure water is clear prior to putting final chemicals into water system)	V	W	—
		Field Visit	**Strainers -** Confirm start-up strainer has been removed from **all** strainers (hang at location)	A	QA	—
		Field Visit	**Air Vents -** Confirm air vents are at specified locations and are auto type, if req	A	QA	QA
		Submittal Process/ Field Visit	**Pressure Relief Valves -** Confirm pressure relief valves are sized properly and installed where specified	A	RA/ QA	QA
		Field Visit	Confirm make-up water pressure setting is sufficient for facility (adjust if req for pressure req at highest point	A	QA	QA
		Field Visit	**Expansion Tanks -** Where diaphragm expansion tanks are provided, confirm tank pressure is set in accordance with nameplate	A	QA	QA
		Field Visit	Confirm valve arrangements for each unit coil are as specified on the contract documents	A	QA	QA
		Field Visit	Confirm all valve clearance req's, manufacturer, and/or contract have been adhered to	A	QA	QA
		Field Visit	**Layout -** Confirm piping layout conforms to the contract documents (physically walk all pipe runs to make sure there are no cross connections)	A	QA	QA
		Field Visit	Confirm traps have been provided on condensate lines per the contract documents	A	QA	
		Field Visit	Confirm slope of condensate lines meets spec req	A	QA	
		Field Visit	**Supports -** Confirm piping supported properly (ie: hangers, saddles, seismic (if req))	A	QA	QA
		Field Visit	**Insulation -** Confirm pipe insulated with specified insulation and vapor barrier is intact	A	QA	QA
		Submittal Process/ Field Visit	**Fittings -** Confirm dialectric fittings have been provided where piping of dissimilar metals connect	A	RA/ QA	—
		Field Visit	Confirm condensate piping from equip has been run to floor drains, if req	A	QA	QA
		Field Visit	**Identification -** Confirm piping is marked properly with water type and direction of flow	A	QA	QA
		Field Visit	Confirm provisions have been made in the piping arrangement at each coil for isolation of flow and ease of coil removal	A	QA	QA

KEY = A - Approve, R - Review, W - Witness, RA - Receipt Acknowledge, S - Surveilance Review, V- Verification and Testing, C - Copy, QA - Quality Assurance

MECHANICAL ENGINEERING ROLES and RESPONSIBILITIES

System	Sub-Systems	Phase	Elements	ME QC / DOR (Ktr)	FEAD (SIOH)	FEC (PCAS)
Components (continued)		Field Visit	Confirm steam piping relief valve has been piped to the exterior of the building in a safe location to personnel	A	QA	QA
		Field Visit	Confirm hazard warning and/or hot surface signage is in place at steam piping, equip. (This also applies to hot water systems)	A	QA	—
		Field Visit	**Flow Meters -** Confirm location of flow meters meets factory req for straight, unobstructed inlet and outlet piping	A	QA	QA
	Chillers	Field Visit	**Leaving Water Temp -** Confirm the leaving chilled water temp is below temp specified for terminal equip to compensate for pump heat gain (approx 1.8F/1.0C) (chiller leaving should **never** be same as temp req at terminal unit)	A	QA	QA
		Submittal Process/ Field Visit	Confirm piping/valve arrangement matches contract documents and balancing valve and flow monitoring device have been provided in accordance with manufacturers req and/or detail	A	RA/ QA	QA
		Submittal Process/ Field Visit	**Decoupler -** Confirm decoupler leg is tied into chilled return piping before entering chilled water return header (for multiple chillers)	A	RA/ QA	QA
		Field Visit	Confirm piping arrangement has allotment for access to the cooling and condensing bundles	A	QA	QA
		Field Visit	**Flow Switch -** Confirm flow switch has been provided to protect the chiller from low or lack of flow	A	QA	QA
		Submittal Process/ Field Visit	Confirm BACNET compatable (if req in contract docs) and that the connection has been made to the DDC control system	A	RA/ QA	QA
	Chiller Systems - Closed Circuit Coolers	Submittal Process	**Construction and rating** - Confirm provided is factory assembled conforming to NFPA 214	A	RA	—
		Submittal Process	**Fire hazard rating** - Verify fire hazard rating for plastic impregnated materials does not exceed 25	A	RA	—
		Submittal Process	**Certification** - Verify Cooling Technology Institute 201 certification of tower capability and performance is provided	A	RA	—
		Submittal Process	**Cooler performance** - Verify meets or exceeds that listed in ASHRAE 90.1	A	RA	—
		Submittal Process/ Field Visit	**Hardware** - Verify stainless steel hardware provided	A	RA/ QA	—
		Submittal Process	**Vibration cutout switch** - Verify interlocked with fan motor	A	RA	—
		Submittal Process	**Fan motors** - Verify 2-speed or adjustable frequency drive fan motors provided	A	RA	—
		Field Visit	**Safety** - Verify OSHA safety requirements for stairs and handrails are met	A	QA	—

KEY = A - Approve, R - Review, W - Witness, RA - Receipt Acknowledge, S - Surveilance Review, V- Verification and Testing, C - Copy, QA - Quality Assurance

MECHANICAL ENGINEERING ROLES and RESPONSIBILITIES

System	Sub-Systems	Phase	Elements	ME QC / DOR (Ktr)	FEAD (SIOH)	FEC (PCAS)
Equipment &	**Chiller Systems - Water Cooled Chillers**	Submittal Process	**Construction and rating** - Verify self-contained chiller provided meeting requirements of ARI 550/590-98	A	RA	—
		Field Visit	**Control panel** - Verify provided with manufacturer's standard controls and protection circuits	A	QA	—
		Submittal Process/ Field Visit	**DDC system** - If DDC system required in project, verify control interface provided for remote monitoring of chiller's operating parameters, functions, and alarms from DDC control system central workstation	A	RA/ QA	QA
		Submittal Process	**Automatic capacity-reduction system** - Verify provided for stable operation from 100 to 10 percent of full load capacity	A	RA	—
	Chiller Systems - Air Cooled	Submittal Process	**Construction and rating** - Verify provided air-cooled chillers are type indicated in Project Program and meet requirements of ARI 550/590-98	A	RA	—
		Submittal Process	**Control panel** - Verify provided with manufacturer's standard controls and protection circuits	A	RA	—
		Submittal Process/ Field Visit	**DDC System** - If DDC system required in project, verify control interface provided for remote monitoring of chiller's operating parameters, functions, and alarms from DDC control system central workstation	A	RA/ QA	QA
		Submittal Process	**Reciprocating chillers** - Verify minimum of four stages of unloading provided at 25% per stage minimum	A	RA	—
		Submittal Process	**Reciprocating chillers** - Verify provided with hot gas bypass	A	RA	—
		Submittal Process	**Head pressure control** - Verify provided for cold temperature operation	A	RA	—
		Submittal Process/ Field Visit	**Freeze protection** - Verify provided for chiller and piping	A	RA/ QA	QA
		Submittal Process/ Field Visit	**Condenser coils** - Verify provided are copper tube with aluminum fins unless specified otherwise	A	RA/ QA	QA
		Submittal Process/ Field Visit	**Condenser coils** - If condenser coil coatings indicated in ESR Section D30, verify provided with copper tube/ copper fin construction or immersion applied, baked phenolic, or other approved coating. Field applied coatings not acceptable.	A	RA/ QA	QA
		Submittal Process/ Field Visit	**Condenser coils** - Verify condenser coils provided with manufacturer's optional louvered covers or hail guards for protection against vandalism, debris, or hail	A	RA/ QA	—
	Cooling Tower	Field Visit	Confirm tower size HP, voltage per contract docs	A	QA	QA
		Submittal Process/ Field Visit	Confirm tower constructed in accordance with specs (ie: galvanized, stainless steel, fiber-glass)	A	RA/ QA	QA
		Submittal Process/ Field Visit	**Sump** - Confirm height of cooling tower sump is above intake of condenser water pumps (min of 3 to 4 feet)	A	RA/ QA	QA

KEY = A - Approve, R - Review, W - Witness, RA - Receipt Acknowledge, S - Surveilance Review, V- Verification and Testing, C - Copy, QA - Quality Assurance

MECHANICAL ENGINEERING ROLES and RESPONSIBILITIES

System	Sub-Systems	Phase	Elements	ME QC / DOR (Ktr)	FEAD (SIOH)	FEC (PCAS)
Equipment & Components (continued)		Submittal Process/ Field Visit	Confirm return line to tower has trap leg below well unless the by-pass is piped directly to cooling tower well	A	RA/ QA	QA
		Field Visit	**Overflow -** Confirm tower well overflow is low enough to prevent the well from overflowing	A	QA	QA
		Field Visit	**Make-up Float -** Confirm tower well make-up float setting shuts of prior to water level reaching the top of the overflow	A	QA	QA
		Field Visit	**Fan Rotation -** Confirm tower fan rotation is correct	A	QA	QA
		Field Visit	**Well Heater -** Confirm tower well heater is installed, if req	A	QA	QA
		Field Visit	**Shut-off Valve -** Confirm tower shut-off valve has been installed in proper location, if req	A	QA	QA
		Field Visit	**Fan Discharge -** Confirm tower fan discharge is unobstructed from above	A	QA	QA
		Field Visit	**Heat Trace -** Confirm tower piping above grade is heat traced, if req	A	QA	QA
		Submittal Process	**Construction and rating** - Confirm provided is factory assembled conforming to NFPA 214	A	RA	—
		Submittal Process	**Fire hazard rating** - Confirm fire hazard rating for plastic impregnated materials does not exceed 25	A	RA	—
		Submittal Process	**Certification** - Verify Cooling Technology Institute 201 certification of tower capability and performance is provided	A	RA	—
		Submittal Process	**Cooling tower performance** - Verify meets or exceeds that listed in ASHRAE 90.1	A	RA	—
		Submittal Process/ Field Visit	**Construction** - Verify construction is as indicated in ESR Section D30 with fill material of PVC formed sheets	A	RA/ QA	—
		Submittal Process/ Field Visit	**Hardware** - Verify stainless steel hardware provided	A	RA/ QA	—
		Submittal Process	**Vibration cutout switch** - Verify interlocked with fan motor	A	QA	—
		Submittal Process	**Fan motors** - Verify 2-speed or adjustable frequency drive fan motors provided	A	QA	—
		Submittal Process/ Field Visit	**Work platforms** - Verify provided at all locations in tower that require periodic maintenance	A	RA/ QA	
		Submittal Process/ Field Visit	**Isolation valves** - For multi-cell installations, verify isolation valves provided on inlets and outlets of each cell	A	RA/ QA	—
	Fan Coil Units	Field Visit	Confirm size and location in accordance with contract docs	A	QA	QA
		Field Visit	**Filter Access -** Confirm filter accessibility	A	QA	QA
		Field Visit	Confirm vibration isolation provided for on hangers and at ductwork connection	A	QA	QA
		Field Visit	Confirm installation of auxilliary drain pan (if req) along with respective condensate drain piping	A	QA	QA

KEY = A - Approve, R - Review, W - Witness, RA - Receipt Acknowledge, S - Surveilance Review, V- Verification and Testing, C - Copy, QA - Quality Assurance

MECHANICAL ENGINEERING ROLES and RESPONSIBILITIES

System	Sub-Systems	Phase	Elements	ME QC / DOR (Ktr)	FEAD (SIOH)	FEC (PCAS)
Equipment & Components (continued)		Field Visit	Confirm valves arranged properly including the straight pipe diameters req before and after the balancing valve	A	QA	QA
		Submittal Process/ Field Visit	**Speed Controller -** Confirm speed controller has been provided, if req in contract docs	A	RA/ QA	QA
		Field Visit	**Fan Access -** Confirm fan access is accessible by maintenance staff	A	QA	QA
		Field Visit	Confirm unit tagging has been provided	A	QA	—
		Field Visit	Confirm operational	A	QA	—
		Submittal Process/ Field Visit	**Sensors -** Confirm leaving air temp sensor has been provided	A	RA/ QA	QA
		Submittal Process	Verify provided are UL-Listed, factory assembled and tested fan coils, ARI 440, and ARI certified	A	QA	—
	Thru Wall Classroom Terminal Units	Field Visit	Confirm size and location in accordance with contract docs	A	QA	QA
		Field Visit	Confirm operational	A	QA	—
		Field Visit	Confirm piping arrangement meets contract docs req's	A	QA	QA
	Packaged Thru Wall Units	Submittal Process	Verify provided is factory assembled air conditioner or heat pump and rated in accordance with ARI 310 or ARI 380 and ARI certified	A	RA	—
		Submittal Process	Verify provided unit includes heat and operates under the standard unit controls (Not sure if worded correctly, D305006 1.4)	A	RA	—
		Submittal Process	**Wall Sleeve -** Verify unit designed to allow ease of maintenance by use of a wall sleeve	A	RA	QA
		Submittal Process/ Field Visit	**Condensate Removal -** Verify provided unit includes internal condensate removal (condensate shall not be externally drained)	A	RA/ QA	QA
	Room Air Conditioners	Submittal Process	Verify provided is factory assembled air conditioner or heat pump and rated in accordance with AHAM RAC-1	A	RA	—
		Submittal Process/ Field Visit	Verify auxiliary electric heat included and operates under the standard unit controls	A	RA/ QA	QA
		Submittal Process	Verify provided unit is AHAM certified or listed in AHAM DCRAC	A	RA	—
	Computer Room Units	Field Visit	Confirm size and location	A	QA	QA
		Field Visit	Confirm all features have been provided	A	QA	QA
		Field Visit	Confirm water connection to humidifier	A	QA	QA
		Field Visit	**Fan Rotation -** Confirm fan rotation	A	QA	QA
		Submittal Process	If computer room unit req'd, verify DOR utilized UFGS Spec section 23 81 23.00 20 (Computer Room Air Conditioning Units) for the project spec and submitted the edited spec section as part of the design submittal for the project	A	RA	—
	Boilers	Field Visit	Confirm size and location	A	QA	—
		Field Visit	**Stack -** Confirm stack material and arrangement meet contract doc req's	A	QA	QA

KEY = A - Approve, R - Review, W - Witness, RA - Receipt Acknowledge, S - Surveilance Review, V- Verification and Testing, C - Copy, QA - Quality Assurance

MECHANICAL ENGINEERING ROLES and RESPONSIBILITIES

System	Sub-Systems	Phase	Elements	ME QC / DOR (Ktr)	FEAD (SIOH)	FEC (PCAS)
		Field Visit	**Stack -** Confirm stack above roof does not touch roof curb and guy wires have been provided	A	QA	QA
		Field Visit	**Stack -** Confirm stack type is per contract docs and the height above the parapet and/or building meets code req's	A	QA	QA
		Field Visit	Confirm fuel train meets contract docs and code req's with no leaks	A	QA	QA
		Submittal Process/ Field Visit	**Make-up Air -** Confirm adequate make-up air for the boiler(s) has been provided under positive pressure to the room	A	RA/ QA	QA
		Field Visit	**Relief Valve -** Confirm relief valve setting and operation	A	QA	—
		Field Visit	**DDC -** Confirm boilers have been interfaced with the DDC system	A	QA	QA
		Field Visit	Confirm pump/piping arrangement meets contract docs including circulation pump, if req	A	QA	QA
		Submittal Process/ Field Visit	Confirm boiler sequencing panel has been provided by the boiler manufacturer, if req in the contract docs	A	RA/ QA	QA
	Boilers - Hot Water	Submittal Process	**Load capacity** - Verify boiler type provided meets building load capacity as indicated in ESR Section D30, if required	A	RA	—
		Submittal Process/ Field Visit	**Construction and rating** - Verify boiler designed, tested, and installed per ASME CSD-1 (Controls and Safety Devices) and ASME BPVC (Boiler and Pressure Vessel Code)	A	RA/ QA	—
		Submittal Process/ Field Visit	**Construction** - Verify boiler meets requirements of UL 795, ANSI Z83.3, and ASME CSD	A	RA/ QA	—
		Submittal Process/ Field Visit	**Burners** - Confirm provided are make, model, and type certified and approved by manufacturer of provided boiler	A	RA/ QA	—
		Submittal Process/ Field Visit	Verify burner controls and flame safety equipment conform to either ASME CSD-1 or NFPA 58 as dictated by input	A	RA/ QA	—
		Submittal Process/ Field Visit	**Boiler controls** - Verify are mounted on a single control panel mounted on the burner or separate from the burner (includes operating switches, indicating lights, gages, alarms, motor starters, fuses, and circuit elements of the control system). If separa	A	RA/ QA	—
		Submittal Process/ Field Visit	**Trim** - Verify boiler trim complies with ASME BPVC SEC IV, ASME CSD-1, and additional appurtenances as specified herein	A	RA/ QA	—
		Submittal Process/ Field Visit	**Pressure gages** - Confirm provided have scale equivalent to 1.5 times the outlet water pressure on supply water piping and return water piping	A	RA/ QA	—
		Submittal Process/ Field Visit	**Thermometers - Piping** - Confirm provided have scale equivalent to 1.5 times the outlet water temperature on supply water piping and return water piping	A	RA/ QA	—
		Field Visit	**Drain valve** - Verify provided and piped to floor drain	A	QA	—

MECHANICAL ENGINEERING ROLES and RESPONSIBILITIES

System	Sub-Systems	Phase	Elements	ME QC / DOR (Ktr)	FEAD (SIOH)	FEC (PCAS)
Equipment & Components (continued)		Submittal Process/ Field Visit	**Air vent valve** - Verify provided with screwed connection, stainless steel disk, and stainless steel seats to vent entrapped air	A	RA/ QA	—
		Submittal Process	**Boiler stack** - Verify provided boiler stack insulated in accordance with manufacturer's recommendations and conform to NFPA 211, or pre-manufactured multi-wall stacks provided complying with NFPA 54 or NFPA 58 and UL-listed	A	RA	—
		Submittal Process/ Field Visit	**Thermometer - Flue gas** - Verify provided and mounted in flue gas outlet	A	RA/ QA	—
		Field Visit	**Cleaning** - Verify boiler(s) cleaned in accordance with ASME Boiler and Pressure Vessel Code and manufacturer's recommendations prior to startup	A	QA	—
		Field Visit	**Testing** - Verify services are furnished of an engineer or technician approved by the boiler manufacturer for installation, startup, and operational and safety testing	V	W	W
		Field Visit	**Testing** - Verify boiler demonstrates proper operability of combustion control, flame safeguard control, and safety interlocks	V	W	W
	Boilers - Steam		**Confirm meets same requirements specified for hot water boilers except as follows:**			
		Submittal Process/ Field Visit	**Pressure gage** - Confirm provided have scale equivalent to 1.5 times the outlet water pressure on boiler feedwater supply piping and condensate return water piping	A	RA/ QA	—
		Submittal Process/ Field Visit	**Pressure gage** - Confirm provided boiler steam pressure gage has scale equivalent to 1.5 times the boiler rated working pressure	A	RA/ QA	—
		Submittal Process/ Field Visit	**Thermometers - Piping** - Confirm provided have scale equivalent to 1.5 times the outlet water temperature on boiler feedwater piping and return water piping	A	RA/ QA	—
	Insulation - Condensate Drain	Field Visit	**Insulation -** Verify condensate drain piping insulated with flexible cellular insulation	A	QA	—
	Insulation	Field Visit	Verify all ductwork provided with external thermal insulation	A	QA	—

KEY = A - Approve, R - Review, W - Witness, RA - Receipt Acknowledge, S - Surveilance Review, V- Verification and Testing, C - Copy, QA - Quality Assurance

MECHANICAL ENGINEERING ROLES and RESPONSIBILITIES

System	Sub-Systems	Phase	Elements	ME QC / DOR (Ktr)	FEAD (SIOH)	FEC (PCAS)
Equipment & Components (continued)		Field Visit	Verify all ductwork in concelaed spaces insulated with blanket flexible mineral fiber	A	QA	—
		Field Visit	Verify ductwork in mechanical Rooms and exposed locations insulated with rigid mineral fiber insulation	A	QA	—
		Field Visit	Verify insulation provided with factory applied all-purpose jacket with integral vapor retarder	A	QA	—
		Field Visit	In exposed locations, verify jacket provided with white surface suitable for painting	A	QA	—
		Submittal Process/ Field Visit	Verify flame spread/smoke developed rating for all insulation does not exceed 25/ 50	A	RA/ QA	—
		Submittal Process	Verify minimum insulation thickness does not violate minimum required by ASHRAE 90.1	A	RA	—
		Field Visit	Verify the backs of all supply air diffusers insulated with blanket flexible mineral fiber insulation	A	QA	QA
	VFDs	Submittal Process/ Field Visit	Verify are factory-assembled VFD drive control systems for variable speed control	A	RA/ QA	QA
		Submittal Process/ Field Visit	Verify all AHU and pump VFD's are from same manufacturer	A	RA/ QA	QA
		Submittal Process/ Field Visit	Verify each VFD provided includes motor starter, motor disconnects, and controls as required for a complete system	A	RA/ QA	QA
		Submittal Process/ Field Visit	Verify VFD units provided are UL-Listed and comply with the National Electric Code	A	RA/ QA	—
		Submittal Process/ Field Visit	Verify the following accessories were provided: Disconnect switch, Control circuit transformer with primary and secondary fuses, Manual bypass, System hand-off-auto switch with provisions for remote start/stop of the system, System initialized light, Run	A	RA/ QA	QA
	Air Separators	Submittal Process/ Field Visit	**For hot and chilled water -** Verify provided are ASME rated air separators with tangential inlet and outlet connections and automatic air vent	A	RA/ QA	—
	Solids Separators	Submittal Process/ Field Visit	Verify provided are centrifugal solids separators with automatic drain in open systems.	A	RA/ QA	—
	Expansion Tanks	Submittal Process/ Field Visit	For hot and chilled water - Verify provided are ASME rated expansion tanks with polypropylene or butyl diaphragm or compression tanks as indicated in UFC 3-400-10N.	A	RA/ QA	—
	Make-Up Water Station	Field Visit	Verify station consists of a water pressure-reducing valve, filter, and relief valve in the make-up water line to the chilled and hot water systems to maintain the operating pressure	A	QA	—
		Field Visit	Verify a 20mm (3/4 inch) globe valve by-pass provided around the pressure reducing station	A	QA	—
		Field Visit	Verify a reduced pressure backflow preventer provided upstream of the by-pass	A	QA	—

KEY = A - Approve, R - Review, W - Witness, RA - Receipt Acknowledge, S - Surveilance Review, V- Verification and Testing, C - Copy, QA - Quality Assurance

MECHANICAL ENGINEERING ROLES and RESPONSIBILITIES

System	Sub-Systems	Phase	Elements	ME QC / DOR (Ktr)	FEAD (SIOH)	FEC (PCAS)
ent & Components (continued)	**Glycol Make-Up Station**	Submittal Process/ Field Visit	If required, verify a glycol make-up system provided to maintain system proper operating mixture	A	RA/ QA	—
	Chemical Treatment	Submittal Process/ Field Visit	If required, verify chilled and hot water systems provided with automatic chemical treatment system for the control of pH, scale formation, and corrosion inhibition	A	RA/ QA	—
		Field Visit	Verify shot-type feeders provided for manual chemical feed	A	QA	—
		Submittal Process	Verify feeders rated for use with pressures up to 900 kPa (130 PSI) (gage)	A	RA	—
		Submittal Process/ Field Visit	Verify condenser water systems provided with automatic chemical treatment systems that monitor conductivity, pH, etc, and provide for water metering and bleed-off	A	RA/ QA	—
		Submittal Process/ Field Visit	Verify chemicals provided are in accordance with EPA and equipment manufacturer's recommendations	A	RA/ QA	—
	System Flushing	Field Visit	Verify hydronic systems flushed thoroughly prior to system startup	A	QA	—
	Heat Tape	Submittal Process/ Field Visit	Verify heat tape provided is UL-Listed, and self-regulating	A	RA/ QA	—
		Submittal Process/ Field Visit	Verify heat tape provided on piping subject to freezing	A	RA/ QA	QA
	Terminal & package Units	Submittal Process/ Field Visit	Where required in ESR Section D30, verify anti-corrosion coating provided on the casing and both the condenser and evaporater coils to protect against salt air damage	A	RA/ QA	—
		Submittal Process/ Field Visit	Verify anti-corrosion coating is immersion applied, baked phenolic or other approved coating (Field applied coatings are not acceptable)	A	RA/ QA	—
	Seismic Design	Submittal Process	Verify provided inaccordance with UFC 3-400-10N, Mechanical Engineering	A	RA	—
	Energy Recovery Wheel (Enthalpy Wheel)	Field Visit	Verify provided is a total energy (enthalpy) type energy recovery wheel (heat wheel)	A	QA	—
		Submittal Process/ Field Visit	**Media -** Verify media is aluminum or a lightweight polymer coated with a corrosion resistance finish (Etched or oxidized surfaces are not acceptable)	A	RA/ QA	—
		Submittal Process/ Field Visit	Verify heat transfer surfaces are coated with a non-migrating (permanently bonded) absorbent specifically developed for the selective transfer of water vapor	A	RA/ QA	—
		Submittal Process	Verify equal sensible and latent recovery efficiencies are documented through a certification program conducted per ASHRAE 84 and ARI 1060	A	RA	—

KEY = A - Approve, R - Review, W - Witness, RA - Receipt Acknowledge, S - Surveilance Review, V- Verification and Testing, C - Copy, QA - Quality Assurance

System	Sub-Systems	Phase	Elements	ME QC / DOR (Ktr)	FEAD (SIOH)	FEC (PCAS)
Equipme		Submittal Process/ Field Visit	Verify energy recovery wheel provided with insulating housing of double wall construction, rotor seals specifically designed to limit cross-contamination, and a rotation detector	A	RA/ QA	—
		Field Visit	Verify the rotation detector alarms the HVAC control system if rotation stops	A	QA	—
		Field Visit	**Filter Access -** Verify filter sections are readily accessible for maintenance	A	QA	QA
	Heat Pipes	Submittal Process	Verify provided are factory fabricated, assembled and tested heat pipes with counter-flow arrangement	A	RA	—
		Submittal Process	Verify are provided with hermitically sealed, seamless aluminum tube cores with extended surfaces	A	RA	—
		Submittal Process	Verify heat exchanger frame constructed of not less than 16-gage galvanized steel and fitted with intermediate tube supports and flange connections	A	RA	—
		Submittal Process	Verify tube end covers and a partition of galvanized steel provided to separate exhaust and supply air streams without cross-contamination	A	RA	—
		Submittal Process	**Refrigerant -** Verify refrigerant used as the working fluid (Type I refrigerants are not allowed)	A	RA	—
	Exterior Piping Manholes	Submittal Process/ Field Visit	**Manholes -** Verify system manholes are constructed of reinforced, 206.8 bar (3000 psi) concrete. Verify manhole floor and sides are watertight and were made in one monolithic pour. Verify manhole top extends a minimum of 300 mm (6 inches) above grade. V	A	RA/ QA	—
		Submittal Process	Verify a sump pit and a vertical sump pump designed for an operating temperature design of 93 degrees C (195 degrees F) minimum are provided in each system manhole.	A	RA	—
		Submittal Process	**Sump Pump - Float Control -** Verify a 2-pole float control is provided for each manhole sump pump.	A	RA	—
	Exterior Piping Cathodic Protection	Field Visit	If underground steel piping is installed, verify a cathodic protection system is provided.	A	QA	—
		Submittal Process	If a cathodic protection system is provided, verify the system was designed by a National Association of Corrosion Engineers (NACE) certified Cathodic Protection Engineer and they supervised, inspected and tested the installation and performance of the ca	A	QA	QA
		Field Visit	Verify the test stations were post mounted and placed at the manhole or nearby building and test stations were provided at each end of each cathodically protected section.	A	QA	—
	DDC		Verify one of the following provided as directed in ESR Section D30			
		Submittal Process	A) Verify Direct Digital Controls (DDC) provided to comply with UFGS Section 23 09 54.00 20, Direct Digital Control Systems	A	RA	—

KEY = A - Approve, R - Review, W - Witness, RA - Receipt Acknowledge, S - Surveilance Review, V- Verification and Testing, C - Copy, QA - Quality Assurance

MECHANICAL ENGINEERING ROLES and RESPONSIBILITIES

System	Sub-Systems	Phase	Elements	ME QC / DOR (Ktr)	FEAD (SIOH)	FEC (PCAS)
Equipment & Components (continued)		Submittal Process	A) Verify DOR utilized UFGS Spec Section 23 09 54.00 20, Direct Digital Control Systems, for the project spec, and submitted the edited spec section as part of the design submittal for the project	A	RA	—
		Submittal Process/ Field Visit	B) Verify a partial DDC system provided that communicates with the existing DDC system	A	RA/ QA	—
		Submittal Process	B) Notwithstanding any other provisions of this contract, no other product will be acceptable other than that indicated in ESR Section D30	A	RA	—
		Submittal Process/ Field Visit	B) Verify the system has stand alone digital controllers, a communication network, and a workstation computer with control software (Pneumatic controllers and components are not acceptable)	A	RA/ QA	—
		Submittal Process	B) Verify all 120-volt wiring complies with NFPA 70	A	RA	—
		Submittal Process/ Field Visit	B) Verify all 24-volt wiring complies with the IMC and terminal device manufacturer's recommendations	A	RA/ QA	—
	DDC - Equipment Controllers	Submittal Process/ Field Visit	Verify DDC hardware are UL-916 rated	A	RA/ QA	—
		Submittal Process/ Field Visit	Verify controllers used in a distributed control manner	A	RA/ QA	QA
		Submittal Process/ Field Visit	Verify controllers are stand alone with an internal clock and modem	A	RA/ QA	QA
		Submittal Process	Verify the total number of I/O hardware points do not exceed 48 in any controller	A	RA	QA
		Submittal Process	Verify sufficient memory provided for each controller to support required control, communication, trends, alarms, and messages	A	RA	QA
		Submittal Process/ Field Visit	Verify communications ports provided for controller to controller, on-site interface, remote workstation interface, and telecommunications interface	A	RA/ QA	QA
	DDC - Electronic Controls	Submittal Process/ Field Visit	If required, verify programmable thermostats provided with built in keypads for scheduling of day and night temps with two setback periods per day	A	RA/ QA	QA
		Submittal Process/ Field Visit	Verify independent summer and winter programs provided	A	RA/ QA	QA
		Submittal Process/ Field Visit	Verify thermostats have temporary and manual override of schedule and battery backup	A	RA/ QA	QA
	All Submittals	Submittal Process	All equipment and controls hardware reviewed by A/E	A	RA	RA
	DALTS - Submittals	Submittal Process	TAB contractor qualifications & certification	RA	RA	A
		Submittal Process	DALT test equip with certification	RA	RA	A

KEY = A - Approve, R - Review, W - Witness, RA - Receipt Acknowledge, S - Surveilance Review, V- Verification and Testing, C - Copy, QA - Quality Assurance

MECHANICAL ENGINEERING ROLES and RESPONSIBILITIES

System	Sub-Systems	Phase	Elements	ME QC / DOR (Ktr)	FEAD (SIOH)	FEC (PCAS)
		Submittal Proces	DALT test plan	RA	RA	A
		Submittal Proces	DALT tests report including plan drawing of duct to be tested and square foot calc for each section	RA	RA	A
	DALTS - Testing	Submittal Process	Ductwork to be DALT'd	RA	RA	A
		Field Visit	Testing	V	W	W
		Submittal Proces	Pre-final DALT report	RA	C	A
		Submittal Proces	Certified final DALT report	RA	C	A
	DALTS - Acceptance Testing	Field Visit	Quality assurance - Contracting officer DALT field checks	V	W	W
		Field Visit	Additional field checks	V	W	W
	TABS - Submittals	Submittal Process	TAB contractors qualifications & certification	RA	RA	A
		Submittal Process	Pre-TAB engineering report	RA	RA	A
		Submittal Process	*Discussion on TAB procedure	RA	RA	A
		Submittal Process	*Pre-requisite checklist	RA	RA	A
		Submittal Process	*Design review report	RA	RA	A
		Submittal Process	*Preliminary TAB test report	RA	RA	A
		Submittal Process	Certified TAB test report (Season 1)	RA	RA	A
		Submittal Process	Certified TAB test report (Season 2 (coil data))	RA	RA	A
	TABS - Pre-Test Checklist		**1) Variable Air Volume Series Boxes**			
			a) General			
		Field Visit	Louvers installed	V	W	—
		Field Visit	Manual dampers open and locked	V	W	—
		Field Visit	Automatic dampers set properly	V	W	—
		Field Visit	Housing construction leakage	V	W	—
		Field Visit	Access doors per plans & specs.	V	W	—
		Field Visit	Condensate drain piping & pan	V	W	—
		Field Visit	Free from dirt & debris	V	W	—
		Field Visit	Nameplate data clearly visible	V	W	—
			b) Filters			
		Field Visit	Type / size / number correct	V	W	—
		Field Visit	Clean	V	W	—
		Field Visit	Blank-off plates installed	V	W	—
		Field Visit	Frame leakage at a minimum	V	W	—
			c) Coils (Hydronic – Water / Steam)			
		Field Visit	Size & rows	V	W	—
		Field Visit	Fin spacing & condition	V	W	—
		Field Visit	Obstructions and/or debris	V	W	—
		Field Visit	Correct air flow direction	V	W	—
		Field Visit	Correct piping connections / flow	V	W	—

KEY = A - Approve, R - Review, W - Witness, RA - Receipt Acknowledge, S - Surveilance Review, V- Verification and Testing, C - Copy, QA - Quality Assurance

System	Sub-Systems	Phase	Elements	ME QC / DOR (Ktr)	FEAD (SIOH)	FEC (PCAS)
		Field Visit	Valves open & set	V	W	—
		Field Visit	Vents / traps installed correctly	V	W	—
		Field Visit	Provisions for TAB measurements	V	W	—
			d) Coils (Electric)			
		Field Visit	Size & construction	V	W	—
		Field Visit	Airflow direction	V	W	—
		Field Visit	Duct connections	V	W	—
		Field Visit	Safety switches	V	W	—
		Field Visit	Obstructions	V	W	—
		Field Visit	Free from debris	V	W	—
		Field Visit	Contractors & disconnect switches	V	W	—
		Field Visit	Electrical service & connections	V	W	—
		Field Visit	Nameplate data clearly visible	V	W	—
			e) Fans			
		Field Visit	Rotation	V	W	—
		Field Visit	Wheel clearance & balance	V	W	—
		Field Visit	Bearing & motor lubrication	V	W	—
		Field Visit	Drive alignment	V	W	—
		Field Visit	Belt tension	V	W	—
		Field Visit	Drive set screws tight	V	W	—
		Field Visit	Belt guards in place	V	W	—
		Field Visit	Flex duct connector alignment	V	W	—
		Field Visit	Proper unit / duct alignment	V	W	—
		Field Visit	Starters & disconnect switches	V	W	—
		Field Visit	Electrical service & connections	V	W	—
		Field Visit	Nameplate data clearly visible	V	W	—
			f) Vibration isolation			
		Field Visit	Springs & compression	V	W	—
		Field Visit	Base level & free	V	W	—
			2) DUCT SYSTEMS			
			a) General			
		Field Visit	Manual damper positioned & locked	V	W	—
		Field Visit	Damper adjustments accessible	V	W	—
		Field Visit	Access doors closed & tight	V	W	—
		Field Visit	Fire dampers open & accessible	V	W	—
		Field Visit	Terminal units open & set	V	W	—
		Field Visit	Registers/diffusers wide open & set	V	W	—
		Field Visit	Turning vanes in square elbows	V	W	—
		Field Visit	Provisions made for TAB tests	V	W	—
		Field Visit	System installed per plans & specs.	V	W	—
		Field Visit	All ductwork sealed as required	V	W	—
			b) Architectural			
		Field Visit	Windows installed & closed	V	W	—
		Field Visit	Doors closed as required	V	W	—
		Field Visit	Ceiling plenums installed/sealed	V	W	—
		Field Visit	Access doors closed & tight	V	W	—
		Field Visit	Air shafts/openings as required	V	W	—
			3) PUMPS			
			a) Motors			
		Field Visit	Rotation	V	W	—

KEY = A - Approve, R - Review, W - Witness, RA - Receipt Acknowledge, S - Surveilance Review, V- Verification and Testing, C - Copy, QA - Quality Assurance

MECHANICAL ENGINEERING ROLES and RESPONSIBILITIES

System	Sub-Systems	Phase	Elements	ME QC / DOR (Ktr)	FEAD (SIOH)	FEC (PCAS)
System Acceptance (continued)		Field Visit	Lubrication	V	W	—
		Field Visit	Alignment	V	W	—
		Field Visit	Set screws tight	V	W	—
		Field Visit	Guards in place	V	W	—
		Field Visit	Tank level and controls	V	W	—
		Field Visit	Starters & disconnects	V	W	—
		Field Visit	Electrical service & connections	V	W	—
			b) Piping			
		Field Visit	Correct flow	V	W	—
		Field Visit	Correct connections	V	W	—
		Field Visit	Leakage	V	W	—
		Field Visit	Valves positioned & set	V	W	—
		Field Visit	Strainers clean	V	W	—
		Field Visit	Air Vented	V	W	—
		Field Visit	Flexible connectors installed	V	W	—
		Field Visit	Provisions made for TAB tests	V	W	—
		Field Visit	System water clean	V	W	—
			c) Bases			
		Field Visit	Vibration isolation	V	W	—
		Field Visit	Grouting (if required)	V	W	—
		Field Visit	Leveling	V	W	—
			4) HYDRONIC EQUIPMENT			
			a) Boilers			
		Field Visit	Operating controls & devices	V	W	—
		Field Visit	Safety controls & devices	V	W	—
		Field Visit	Lubrication of fans & pumps	V	W	—
		Field Visit	Draft controls & devices	V	W	—
		Field Visit	Piping controls & devices	V	W	—
		Field Visit	Valves set & open	V	W	—
		Field Visit	Water make-up provisions	V	W	—
		Field Visit	Blowdown provisions	V	W	—
		Field Visit	Electrical connections	V	W	—
		Field Visit	Nameplate data clearly visible	V	W	—
			b) Heat Exchangers			
		Field Visit	Correct flow & connections	V	W	—
		Field Visit	Valves open or set	V	W	—
		Field Visit	Air vents or steam traps	V	W	—
		Field Visit	Leakage	V	W	—
		Field Visit	Provisions made for TAB tests	V	W	—
		Field Visit	Nameplate data clearly visible	V	W	—
			c) Cooling Towers/Evaporative Condensers			
		Field Visit	Correct flow & connections	V	W	—
		Field Visit	Valves open or set	V	W	—
		Field Visit	Leakage	V	W	—
		Field Visit	Provisions made for TAB tests	V	W	—
		Field Visit	Sump water level	V	W	—
		Field Visit	Spray nozzles	V	W	—
		Field Visit	Fan/Pump rotation	V	W	—
		Field Visit	Motor/Fan lubrication	V	W	—
		Field Visit	Drives & alignment	V	W	—

KEY = A - Approve, R - Review, W - Witness, RA - Receipt Acknowledge, S - Surveilance Review, V- Verification and Testing, C - Copy, QA - Quality Assurance

MECHANICAL ENGINEERING ROLES and RESPONSIBILITIES

System	Sub-Systems	Phase	Elements	ME QC / DOR (Ktr)	FEAD (SIOH)	FEC (PCAS)
System Acceptance (continued)		Field Visit	Guards in place	V	W	—
		Field Visit	Starters & disconnects	V	W	—
		Field Visit	Electrical connections	V	W	—
		Field Visit	Nameplate data clearly visible	V	W	—
			5) REFRIGERANT EQUIPMENT			
		Field Visit	Crankcase heaters energized	V	W	—
		Field Visit	Operating controls & devices	V	W	—
		Field Visit	Safety controls & devices	V	W	—
		Field Visit	Valves open	V	W	—
		Field Visit	Piping connections & flow	V	W	—
		Field Visit	Flexible connectors	V	W	—
		Field Visit	Oil level & lubrication	V	W	—
		Field Visit	Alignment & drives	V	W	—
		Field Visit	Guards in place	V	W	—
		Field Visit	Vibration isolation	V	W	—
		Field Visit	Starters/Contactors/Disconnects	V	W	—
		Field Visit	Electrical connections	V	W	—
		Field Visit	Nameplate data clearly visible	V	W	—
			6) HYDRONIC PIPING SYSTEM			
		Field Visit	Leak tested	V	W	—
		Field Visit	Fluid levels & make-up	V	W	—
		Field Visit	Relief or safety valves	V	W	—
		Field Visit	Expansion tanks & air vents	V	W	—
		Field Visit	Steam traps & connections	V	W	—
		Field Visit	Strainers clean	V	W	—
		Field Visit	Valves open & set	V	W	—
		Field Visit	Provisions made for TAB tests	V	W	—
		Field Visit	Systems installed per plans & specs.	V	W	—
			7) CONTROLS & CONTROL SYSTEMS			
		Field Visit	Data centers	V	W	—
		Field Visit	Outdoor/return Air/reset	V	W	—
		Field Visit	Economizer set & tested	V	W	—
		Field Visit	AHU Static pressure set	V	W	—
		Field Visit	Room controls calibrated	V	W	—
		Field Visit	VAV box regulators set to design	V	W	—
		Field Visit	VAV box P.E. switches set	V	W	—
		Field Visit	Proper end-of-line static pressure	V	W	—
		Field Visit	VAV box reheats tested	V	W	—
			8) OTHER CHECKS			
		Submittal Process	Appropriate contractors notified of TABS	A	RA	S
		Submittal Process	Preliminary data complete	A	RA	S
		Submittal Process	Test report forms prepared	S	RA	A

KEY = A - Approve, R - Review, W - Witness, RA - Receipt Acknowledge, S - Surveilance Review, V- Verification and Testing, C - Copy, QA - Quality Assurance

MECHANICAL ENGINEERING ROLES and RESPONSIBILITIES

System	Sub-Systems	Phase	Elements	ME QC / DOR (Ktr)	FEAD (SIOH)	FEC (PCAS)
	TABS - Testing	Field Visit	TAB field work	V	W	
		Submittal Process	Preliminary procedures	RA	C	A
		Field Visit	TAB air distrbution systems	V	W	—
		Field Visit	TAB water distribution systems	V	W	—
		Field Visit	Sound measurement work	V	W	—
		Field Visit	TAB work on performance tests without seasonal limitations	V	W	—
		Field Visit	TAB work on performance tests with seasonal limitations	V	W	—
		Field Visit	Marking settings	V	W	—
		Field Visit	Marking of test ports	V	W	—
	TABS - Acceptance Testing	Field Visit	Quality assurance - Contracting officer TAB field checks	V	W	W
		Field Visit	Additional field checks	V	W	W
	ACATS - Submittals	Submittal Process	Controls contractor qualifications	RA	RA	A
		Submittal Process	Manufacturers field report	RA	RA	A
		Submittal Process	Performance verification test plan (PVT)	RA	RA	A
		Submittal Process	Pre-PVT checklist	RA	RA	A
		Submittal Process	Final certified PVT report (with all mods incorporated in as-builts)	RA	RA	A
	ACATS - Pre-PVT Checklist	Field Visit	Prior to conducting the PVT, thoroughly inspect the installed work with the Contractor's QC representative and the mechanical contractor using the following checklist. Submit the checklist with items checked off once verified. Provide a detailed explana	V	W	—
		Field Visit	a. Verify all required mechanical installation work is successfully completed, and all HVAC equipment is working correctly (or will be by the time the PVT is conducted).	V	W	—
		Field Visit	b. Verify HVAC motors operate below full-load amperage ratings.	V	W	—
		Field Visit	c. Verify all required control system components, wiring, and accessories are installed.	V	W	—
		Field Visit	d. Verify the installed control system architecture matches approved drawings.	V	W	—
		Field Visit	e. Verify all control circuits operate at the proper voltage and are free from grounds or faults.	V	W	—
		Field Visit	f. Verify all required surge protection is installed and functions correctly.	V	W	—
		Field Visit	g. Verify the A/C Power Table specified in "CONTROLS SYSTEM OPERATORS MANUALS" is accurate.	V	W	—

KEY = A - Approve, R - Review, W - Witness, RA - Receipt Acknowledge, S - Surveilance Review, V- Verification and Testing, C - Copy, QA - Quality Assurance

System	Sub-Systems	Phase	Elements	ME QC / DOR (Ktr)	FEAD (SIOH)	FEC (PCAS)
System Acceptance (continued)		Field Visit	h. Verify all DDC network communications function properly, including uploading and downloading programming changes.	V	W	—
		Field Visit	i. Using the BACnet protocol analyzer (if provided or required in this specification), verify communications are error free.	V	W	—
		Field Visit	j. Verify each digital controller's programming is backed up.	V	W	—
		Field Visit	k. Verify all wiring, components, and panels are properly labeled.	V	W	—
		Field Visit	l. Verify all required points are programmed into devices.	V	W	—
		Field Visit	m. Verify all TAB work affecting controls is complete.	V	W	—
		Field Visit	n. Verify all valve and actuator zero and span adjustments are set properly.	V	W	—
		Field Visit	o. Verify all sensor readings are accurate and calibrated.	V	W	—
		Field Visit	p. Verify each control valve and actuator goes to normal position upon loss of power.	V	W	—
		Field Visit	q. Verify all control loops are tuned for smooth and stable operation. View trend data where applicable.	V	W	—
		Field Visit	r. Verify each controller works properly in stand-alone mode.	V	W	—
		Field Visit	s. Verify all safety controls and devices function properly, including interfaces with building fire alarm systems.	V	W	—
		Field Visit	t. Verify all electrical interlocks work properly.	V	W	—
		Field Visit	u. Verify all workstations, notebooks and maintenance personnel interface tools are delivered, all system and database software is installed, and graphic pages are created for each workstation and notebook. Notify the Government when phone lines or netw	V	W	—
		Field Visit	v. Verify the as-built (shop) control drawings are completed.	V	W	—
	ACATS - Testing	Field Visit	Field testing of components	V	W	—
		Field Visit	Field testing of programming	V	W	—
		Field Visit	Pre-performance verification testing	V	W	—
	ACATS - Acceptance Testing	Field Visit	Performance verification testing	V	W	W
		Field Visit	Performance verification re-resting	V	W	W

ROOFING ROLES and RESPONSIBILITIES

System	Sub-Systems	Phase	Elements	Roof QC / DOR (Ktr)	FEAD (SIOH)	FEC (PCAS)
Roofing	**Low Sloped Roofs**	Design Guidance	Post Award Kick Off Meeting		S	A
		Design Guidance	Verify Roof Design Assurance	A	R	S
		Submittal Process	Review Shop Drawings	A	S	S
		Submittal Process	Review Manufacturer's Product Data Sheets	A	S	S
		Submittal Process	Review Design Data (to include wind and fire resistance)	A	S	S
		Submittal Process	Review Test Reports	A	S	S
		Submittal Process	Review Certificates	A	S	S
		Submittal Process	Review Sample Roof Warranty	A	S	C
		Field Visit	Conduct Pre Roofing Conference	V	S	S
		Field Visit	Review Delivery, Storage, and Handling	A	S	S
		Field Visit	Verify Conditions for roof application	A	S	S
		Field Visit	Verify Preparation	A	S	S
		Field Visit	Verify Application	A	S	S
		Field Visit	Verify Protection of Applied Roofing	A	S	S
		Field Visit	Verify Field Quality Control	A	S	S
		Field Visit	Verify Operation Maintenance and Support Information (Roof Warranty and Information Card)	A	S	S
	Steep Sloped Roofs	Design Guidance	Post Award Kick Off Meeting		S	A
		Design Guidance	Verify Roof Design Assurance	A	R	S
		Submittal Process	Review Shop Drawings	A	S	S
		Submittal Process	Review Manufacturer's Product Data Sheets	A	S	S
		Submittal Process	Review Design Data (to include wind and fire resistance)	A	S	S
		Submittal Process	Review Test Reports	A	S	S
		Submittal Process	Review Certificates	A	S	S
		Submittal Process	Review Sample Roof Warranty	A	S	C
		Field Visit	Conduct Pre Roofing Conference	V	S	S
		Field Visit	Review Delivery, Storage, and Handling	A	S	S
		Field Visit	Verify Conditions for roof application	A	S	S
		Field Visit	Verify Preparation	A	S	S
		Field Visit	Verify Application	A	S	S
		Field Visit	Verify Protection of Applied Roofing	A	S	S
		Field Visit	Verify Field Quality Control	A	S	S
		Field Visit	Verify Operation Maintenance and Support Information (Roof Warranty and Information Card)	A	S	S

KEY = A - Approve, R - Review, W - Witness, RA - Receipt Acknowledge, S - Surveilance Review, V- Verification and Testing, C - Copy, QA - Quality Assurance

UNDERWATER STRUCTURES ROLES and RESPONSIBILITIES

System	Sub-Systems	Phase	Elements	UW QC / DOR (Ktr)	FEAD (SIOH)	FEC/NF ESC (PCAS)
Waterfront Structure H10 (Uniformat II) - Substructure H1010	**Pile Foundations (H101001) Sheet Piles (H101001) Caissons (H101001) Cofferdams (H101001) Wraps and Encasements (H101001) Sheet Pile Bulheads (H101003) Gravity Walls (H101003) Block Walls (H101003) Seawalls (H101006) Boat Ramps (H101007) Cut-Off Walls (H101008) Wave Attenuation Walls (H101009) Fender Piles (H104001) Dolphins (H104004)**	Submittal Process	Shop Drawings	A	C	S
		Submittal Process	Manufacturer's Data Sheets	A	C	S
		Submittal Process	Pile driving records	A	C	S
		Submittal Process	Concrete testing: petrographic, chemical, service-life modeling	A	C	S
		Submittal Process	As-built drawings, 3D AUTOCAD format	A	C	S
		Field Visit	Validate in-water/underwater structure complies with RFP requirements, e.g., number, location, size, etc.	A	—	W
		Field Visit	Inspect in-water prestressed/precast concrete piles or sheetpiles for alignment, spalls, cracks, damages, defects, lifting hoops cut/area patched, exposed steel ties, penetrations, etc.	A	—	W
		Field Visit	Inspect in-water cast-in-place concrete drilled caissons for alignment, spalls, cracks, damages, defects, concrete quality (hardness), honeycombing, etc.	A	—	W
		Field Visit	Inspect in-water steel piles and/or p/c p/s concrete sheetpiles for alignment, damage/buckling, coating damage, penetrations, gaps, etc.	A	—	W
		Field Visit	Inspect underwater concrete placement for defects such as honeycombing, concrete quality (hardness)	A	—	W
		Field Visit	Inspect underwater slope protection for conformance with RFP requirements such as rock/boulder size, placement gap limits, angle, location (e.g., toe of slope protection), consistency, etc.	A	—	W
		Field Visit	Inspect underwater Cathodic Protection anodes and connections	A	—	W
		Field Visit	Inspect for underwater debris, existing or by construction.	A	—	W
		Field Visit	Validate in-water/underwater structure complies with RFP requirements, e.g., number, location, size, etc.	A	—	W
		Field Visit	Validate in-water/underwater structure complies with RFP requirements, e.g., number, location, size, etc.	A	—	W
		Field Visit	Validate in-water/underwater structure complies with RFP requirements, e.g., number, location, size, etc.	A	—	W

KEY = A - Approve, R - Review, W - Witness, RA - Receipt Acknowledge, S - Surveilance Review, V- Verification and Testing, C - Copy, QA - Quality Assurance

UNDERWATER STRUCTURES ROLES and RESPONSIBILITIES

System	Sub-Systems	Phase	Elements	UW QC / DOR (Ktr)	FEAD (SIOH)	FEC/NFESC (PCAS)
Underwater Cables	**All**	Submittal Process	Shop Drawings	A	C	S
		Submittal Process	Manufacturer's Data Sheets	A	C	S
		Field Visit	Validate in-water/underwater cable complies with RFP requirements, e.g., number, location, size, etc.	A	—	W
		Field Visit	Inspect underwater cable for defects/damages, kinks, missing anchors, coating damage, etc.	A	—	W
		Field Visit	Inspect for underwater debris, existing or by construction.	A	—	W
Underwater Utility Pipes and Conduits	**All**	Submittal Process	Shop Drawings	A	C	S
		Submittal Process	Manufacturer's Data Sheets	A	C	S
		Field Visit	Validate in-water/underwater component complies with RFP requirements, e.g., number, location, size, etc.	A	—	W
		Field Visit	Inspect underwater component for defects/damages, cracks, missing anchors, coating damage, etc.	A	—	W
		Field Visit	Inspect for underwater debris, existing or by construction.	A	—	W

KEY = A - Approve, R - Review, W - Witness, RA - Receipt Acknowledge, S - Surveilance Review, V- Verification and Testing, C - Copy, QA - Quality Assurance

DEFINITIONS

Approve	(A)	Professional or quality control endorsement of the submittal or installed system meets the contract requirements
Review	(R)	To confirm accuracy of the submittal and that it meets contract requirements
Witness	(W)	Observe demonstration of system performance for acceptance
Receipt **A**cknowledge	(RA)	Confirm receipt of submittal with no review necessary
Surveillance Review	(S)	A quality assurance review based on risk, complexity, and workload
Performance **V**erification and Acceptance Testing	(V)	A demonstration of satisfactory construction and system performance
Receive **C**opy of Correspondence	(C)	Receive a copy of the transmittal sheet and/or correspondence letter
Quality **A**ssurance Inspection	(QA)	Witnessing satisfactory performance without testing all devices or visual inspection of various parts of the system

NRZ Checklist/POAM Items

The tables below provide typical NRZ checklist items for contractor, Client, and NAVFAC actions (Tables 1, 2, and 3, respectively). Items listed on the checklists are required to remain on the checklists if they are part of the project/contract or required by construction convention. Items not listed on the checklists, but required in the contract or by construction convention, must be added to the checklists by the contractor, Client and NAVFAC. Checklists are applicable to all contracts no matter what Category of Work.

The Point of Contact and due date shall initially be determined during the Facility Turnover Planning Meeting by the NAVFAC, client and contractor leads. During execution of the NRZ process, for each item on the entire list, the Construction Manager (CM) shall indicate date completed and initial to indicate completion of the item. If a party fails to complete an item by the due date, this should be noted on the checklist and new due date established and indicated. The completed NRZ Checklist/POAM shall be placed in the contract file.

Table 1

Contractor Checklist Items	Point of Contact	Due Date	Actual Complete Date	CM Initials	Notes
a. Construction Completion Schedule					
b. Facility Delivery Closeout:					
Duct Air Leakage Testing					
HVAC System Test & Balance					
ACATS Controls Testing					
Conduct Second Seasons TAB					
Electrical Systems Testing					
Final utility systems connections (power, water, etc.)					
Superchlorination of potable water systems					
Plumbing / Other Mechanical Testing					
Elevator Certification(s)					
Specialized Equipment & Systems Inspections (Boilers, UPV, etc.)					
Fire Protection Systems Inspections and Performance Verification					
Communications / IT Systems Testing					
Security Systems Testing					
Other Specified Building Performance Requirements					
c. Other Contractor Items:					
Delivery of O&M Manuals					
Delivery of Equipment/Product Warranty List/Tag					
O&M/OMSI Training of Navy Personnel					
Site Restoration, if applicable					

Contractor Checklist Items	Point of Contact	Due Date	Actual Complete Date	CM Initials	Notes
Landscaping Complete					
Pre-Final Inspection					
Final Inspection and Acceptance					
Delivery of Spare Parts, Extra Stock, Special Tools, etc					
Delivery of As-Built Drawings					
Delivery of Utility Record Drawings (if applicable)					
Delivery of Utility As-Built Drawings (if applicable)					
Beneficial Occupancy Date (BOD)					
Final Demobilization and Clean-up Completed					
Remove Construction Fence & Associated Coordination					
Pre-warranty Conference					
Project Close-out Meeting					
Coordination and Delivery of Facility Signage					
Final Cleaning					
Replace Construction Lock Cores and Re-keying					
Punch List Completion					
Provide DD1354 to Government CM					

Table 2

Client Checklist Items	**Point of Contact**	**Due Date**	**Actual Complete Date**	**CM Initials**	**Notes**
Modification to FSC or BOSC to maintain/service new facility -Telephone service contract -Utilities service contract -Custodial service contract					
Installation of communications for phones and computers					
Government Telecommunications Installations or other networks					
Delivery and installation of client furnished furniture					
Delivery and installation of client furnished equipment					
User move-in					
GFE status/delivery schedule (GFCI, GFGI)					
Coordination of Intrusion Detection Systems and Physical Security Equipment					
Process operating permits					
Recycled/recovered materials report					
Coordination of IT and Communication Infrastructure and Devices (incl. CAT IV)					
Ribbon-cutting ceremony					

Table 3

NAVFAC Checklist Items	Point of Contact	Due Date	Actual Complete Date	CM Initials	Notes
Client walk-thru prior to pre-final inspections, if appropriate					
Schedule client satisfaction post BOD follow-up					
Schedule Government inspections of specialized equipment (e.g., Boiler/pressure vessels, elevators, UPS, Secure Room shielding requirements, medical certifications, generators/switchgear)					
Provide keying plan to contractor					
Confirm utilities availability for final connections by contractor					
Startup utilities					
Mechanical Acceptance					
Resolve contract modifications & requests for equitable adjustment					
Contractor final release					
Return unobligated funds					
Process final payment					
Process recycled/recovered materials report					
Closeout actions on construction permits (e.g., NPDES)					
A-E and Construction Contractor Evaluations (ACASS/CCASS)					
Contractor QC Evaluation					
Complete Installed Property List and DD 1354					
Sign & provide Interim DD1354 to activity Real Property Accountability Officer NLT BOD					

Cover Sheet/Team List for:

Project Title: Central Heating Plant Conversion **Project Number:** P224

Location: CHERRY POINT MCAS, NORTH CAROLINA **Date:** 06-JAN-16

Prepared By: MCAS CHERRY POINT NC **FY:** 2017 **UIC:** M00146

A. Team Check List: Completed: [ ] Working: [X]

B. Team Meeting: Date:

On-Site: [ ] VTC: [ ] Conference Call: [ ]

Project Cost ($000)

12515

C. Team Members:

Name	Position	Command	Phone Number
Brian Abbott	Business Line Team Leader	NAVFAC	757-322-8342
Dave Jackson	Supervisory PM	NAVFAC	757-322-4292
Don Elliott	Supervisory Asset Manager	MCAS Cherry Point	252-466-4763
Gerald Frazier	Facilities Asset Manager	MCAS Cherry Point	252-466-4771
Kevin Hanna	Project Manager	NAVFAC	757-322-4273
Melissa Wilkie	Asset Manager	MCAS Cherry Point	252-466-4640
Scott Kozenski	Cost Estimator	NAVFAC	757-341-0164

D. Remarks:

E. Required Attachments:

- [X] MILCON CHECKLIST
- [X] Economic Analysis
- [X] Site Plan
- [X] Facility Planning Document(s)/P-80 Calculations
- [ ] R19 (Bachelor Housing Survey)
- [ ] Notice of Violation (NOV)
- [ ] Other
- [ ] PHOTOGRAPHS
- [X]

F. Endorsements:

Signature	Position	Date
Donald Elliott	Activity CO (Meets Military Requirements)	31-MAR-15
Comments: None		
Brian Abbott	FEC CIBL (Endorsement)	03-APR-15
Comments: None		

1. Component NAVY	FY 2017 MILITARY CONSTRUCTION PROGRAM	2. Date 06 JAN 2016

3. Installation(SA) and Location/UIC: M00146 MCAS CHERRY POINT NC CHERRY POINT MCAS, NORTH CAROLINA	4. Project Title Central Heating Plant Conversion

5. Program Element	6. Category Code	7. Project Number	8. Project Cost ($000)
0202176M	82112	P224	12,515

9. COST ESTIMATES

Item	UM	Quantity	Unit Cost	Cost($000)
CENTRAL HEATING PLANT CONVERSION	MB	315		6,750
CENTRAL HEATING PLANT CC82109 (RENOVATE)	MB	315	18,027.00	(5,680)
INFORMATION SYSTEMS	LS			(100)
BUILT-IN EQUIPMENT	LS			(560)
SPECIAL COSTS	LS			(280)
OPERATION & MAINTENANCE SUPP INFO (OMSI)	LS			(130)
SUPPORTING FACILITIES				4,530
SPECIAL CONSTRUCTION FEATURES	LS			(3,300)
SITE PREPARATIONS	LS			(130)
PAVING AND SITE IMPROVEMENTS	LS			(210)
ELECTRICAL UTILITIES	LS			(60)
MECHANICAL UTILITIES	LS			(830)
SUBTOTAL				11,280
CONTINGENCY (5%)				560
TOTAL CONTRACT COST				11,840
SIOH (5.7%)				670
SUBTOTAL				12,510
TOTAL REQUEST ROUNDED				12,510
TOTAL REQUEST				12,515
EQUIPMENT FROM OTHER APPROPRIATIONS (NON ADD)				(100)

Guidance Unit Cost Analysis

Cat Code	Facility	OSD Guid.	Guid. Cost	Guid. Size	Project Scope	Room Size Fctr	Size Fctr	Area Cost Fctr	Esc. Factor	Unit Cost
82112	CENTRAL HEATING PLANT		18,027.00	315 MB	315 MB		1.0000	1.000	1.000000000	18,027.00

For category code 821-12, an A/E cost estimate was developed by RMF Engineering in March 2014. Due to time constraints and being specialty items, the A/E estimate was taken at face value. The A/E estimate data date is 1/1/2014 and was de-escalated to 10/2013. The Construction Start Date for this project is assumed to be Jun -17.
9.0% escalation has been added onto the Unit Cost of $17,557/MB at Oct-13 to achieve a modified unit cost of $19,137/MB. The 9.0% escalation accounts for the project year (FY 17) and a 2.00 year construction duration, which moves the mid-point of construction 54 months beyond the Guidance Unit Cost date (Oct-13). Calculations: $17,557 * 1.090 = $19,137 * 1.000 * 1.000 = $19,137/MB.

10. Description of Proposed Construction:

Convert four existing boilers to burn natural gas as the primary fuel and No. 2 fuel oil as backup. Modifications to the boilers include installation of new burners, fans,

windboxes, burner management systems, and other required components.

Information systems includes upgrades to boiler control systems.

Built-in equipment includes the installation of a No. 2 fuel oil tank, natural gas piping and infrastructure. Repairs to existing built-in equipment include the replacement of the condensate tanks and polishers, painting the existing storage tanks, and modifications to the water treatment system.

Special costs include Post Construction Contract Award Services (PCAS), permitting fees, phasing costs and initial system training.

Operations and Maintenance Support Information (OMSI) is included in this project.

Department of Defense and Department of the Navy principles for high performance and sustainable building requirements will be included in the design and construction of the project in accordance with federal laws and Executive Orders. Low Impact Development will be included in the design and construction of this project as appropriate.

Special construction features include the removal of the coal delivery system, the ash removal equipment, including the water treatment system, and includes closing the associated building penetrations by bricks, louvers and windows as appropriate.

Site preparation includes pavement and contaminated earth removal. It also includes the demolition of a railroad track and an oil/water separator.

Paving and site improvements include the installation of a reinforced chain-link fence and surveillance cameras. The coal yard will be modified for use as a parking lot. Sidewalks and walkways shall be provided around the site as required. Curb and gutter and stormwater utility rerouting will be utilized to improve site drainage.

Electrical utilities include exterior lighting.

Mechanical utilities include fuel oil and condensate loop piping and repairs to the existing plant auxiliaries, offloading transfer station, and pumps.

Facilities will be designed to meet or exceed the useful service life specified in DoD Unified Facility Criteria. Facilities will incorporate features that provide the lowest practical life cycle cost solutions satisfying the facility requirements with the goal of maximizing energy efficiency.

11. Requirement: 315 MB **Adequate:** 0 MB **Substandard:** 0 MB

1. Component NAVY	FY 2017 MILITARY CONSTRUCTION PROGRAM	2. Date 06 JAN 2016

3. Installation(SA) and Location/UIC: M00146 MCAS CHERRY POINT NC CHERRY POINT MCAS, NORTH CAROLINA	4. Project Title Central Heating Plant Conversion

5. Program Element	6. Category Code	7. Project Number	8. Project Cost ($000)
0202176M	82112	P224	12,515

FACILITY PLANNING DATA:

Category Code		Requirement	UM	Adequate	Substandard	Inadequate	Deficit/ Surplus
82112	HEATING PLANT - OIL / GAS	689910	MB				

NOTES:

Cost Engineer Notes:
1. P224 was one of three projects in NAVFAC MIDLANT for which PDA was issued February 27, 2015, with an expected submission date of April 3, 2015. This is not adequate time to thoroughly research all data to scope and cost the 1391. The estimate from a recent A/E Condition Assessment Study was referred to for various costs.
2. We are using the HEAT/STEAM property record card with a plant replacement value of $105 million when considering the renovation/prv ratio and corresponding triggers. Since we are not close to the triggers, no costs with respect to the triggers have been added.
3. There are environmental issues associated with the demolition and abatement of the coal handling and fly ash conveyance equipment. I have included $850,000 for these probable issues, but the scope is not yet defined.

SCOPE:

Project is a utility conversion project that includes replacement of boiler components and other supporting utilities.

PROJECT:

Convert all four coal burning boilers to natural gas as the primary fuel source and No. 2 fuel oil as the backup fuel source and remove all coal and ash handling equipment and systems.

(Current Mission)

REQUIREMENT:

This project is required because the coal handling equipment and ash removal equipment is beyond their useful life and steam is still needed to heat the buildings on the base and at the Fleet Readiness Center East which uses the steam in many of their industrial processes.

This project enables compliance with the requirements of the EPA's Boiler - Maximum Achievable Control Technology (MACT) regulation of December 2013, which requires implementation before 2019. This regulation affects air toxic standards by limiting air pollutant emissions from large (major) industrial, commercial, and institutional boilers. Current Title V regulations as well as the Boiler - MACT regulations have established strict emission limits when firing coal. These regulatory limits will be extremely difficult and expensive to meet if the Cherry Point central heating plant continues to use coal as its primary fuel source.

CURRENT SITUATION:

1. Component NAVY	FY 2017 MILITARY CONSTRUCTION PROGRAM	2. Date 06 JAN 2016

3. Installation(SA) and Location/UIC: M00146 MCAS CHERRY POINT NC CHERRY POINT MCAS, NORTH CAROLINA	4. Project Title Central Heating Plant Conversion

5. Program Element	6. Category Code	7. Project Number	8. Project Cost ($000)
0202176M	82112	P224	12,515

The central heating plant at Cherry Point distributes steam to 120 buildings. The steam is generated using a combination of coal and fuel oil as the primary fuel. Boilers #1 and #2 are coal fired units, originally installed in 1977 and re-tubed in 2007 and 2008, respectively. Boilers #3 and #4 were installed in 1989 and burn number 2 fuel oil.

The ash handling system is at the end of its useful life and needs replacement if coal remains as the fuel source for the boilers. Additionally, the coal handling system, constructed in 1988, is in need of extensive renovations if coal remains as the fuel source for the boilers.

The burner systems on Boiler #3 and #4 no longer efficiently burn number 2 fuel oil.

Although the site does not currently have natural gas, the local natural gas distribution company will provide the natural gas supply line to the project site.

This project is not sited in a 100-year flood plain.

IMPACT IF NOT PROVIDED:

Without this project, the Boiler-MACT requirements will not be achieved while burning coal. A major repair project would be required to meet the mercury and hydrogen chloride emission limits. Based on a condition assessment and economic analysis, without the conversion of the heating plant the repairs and additional control equipment needed for MACT compliance are estimated to exceed $20 million.

ADDITIONAL: Economic Alternatives Considered:

A. Status Quo:

Status quo is unacceptable as the equipment does not burn efficiently and would need to be replaced anyway.

B. Renovation/Modernization:

Renovation/Modernization of the existing equipment would be more expensive than this conversion and would cost more to operate.

C. Lease:

Not applicable.

D. New Construction:

New construction entailing conversion of the boilers to burn natural gas as the primary fuel and #2 fuel oil as the backup fuel source will provide modern efficient equipment to meet the current requirement for heating. It also demolishes the coal and ash handling equipment that is no longer needed. Operating costs will be lower due to reduced electricity, personnel, permitting and reporting, disposal costs and consumables (lime and carbon).

E. Other Alternatives:

N/A

1. Component NAVY	FY 2017 MILITARY CONSTRUCTION PROGRAM	2. Date 06 JAN 2016

3. Installation(SA) and Location/UIC: M00146 MCAS CHERRY POINT NC CHERRY POINT MCAS, NORTH CAROLINA	4. Project Title Central Heating Plant Conversion

5. Program Element	6. Category Code	7. Project Number	8. Project Cost ($000)
0202176M	82112	P224	12,515

F. Analysis Results:

New construction is the preferred alternative.

12. Supplemental Data:

Site Approval:

[X] Yes, obtained date: 07/2014
[ ] No, expected date:

Issues (If yes, please provide discussion under issue):

Yes	No	
[ ]	[X]	DDESB, AICUZ, Airfield, EMR, or wetlands
[ ]	[X]	Endangered species/sensitive habitat
[ ]	[X]	Air quality
[ ]	[X]	Cultural/archeological resources
[ ]	[X]	Clearing of trees
[ ]	[X]	Known contamination at selected site
[ ]	[X]	Operational problems
[ ]	[X]	Traffic patterns impact
[ ]	[X]	Existing utilities upgrade
[ ]	[X]	Ordnance sweep required prior to Construction

Planning (If no, please provide an explanation):

Yes	No	
[X]	[ ]	Consistent w/ Master Plan or Base/Regional Dev.

Host Nation Approval: N/A

National Capital Region Approval: N/A

NEPA Documentation:

Yes	No	
[X]	[ ]	Complete

Level of NEPA:

Yes	No	
[X]	[ ]	Categorical Exclusion
[ ]	[X]	Environmental Assessment(EA)
[ ]	[X]	Environmental Impact Statement(EIS)
[ ]	[X]	Memorandum of Negative Decision

Mitigation Issues:

Yes	No	
[ ]	[X]	Wetlands replacement/enhancement
[ ]	[X]	Hazardous waste
[ ]	[X]	Contaminated soil/water
[ ]	[X]	Other

Environmental Cleanup: N/A

1. Component NAVY	FY 2017 MILITARY CONSTRUCTION PROGRAM	2. Date 06 JAN 2016

3. Installation(SA) and Location/UIC: M00146 MCAS CHERRY POINT NC CHERRY POINT MCAS, NORTH CAROLINA	4. Project Title Central Heating Plant Conversion

5. Program Element	6. Category Code	7. Project Number	8. Project Cost ($000)
0202176M	82112	P224	12,515

Project Issues:

Yes	No	
	X	System safety
	X	Soils - foundation and seismic conditions
	X	Construction/operational permits
	X	Local air quality/wastewater permits
	X	Complies with Final Governing Standard (Environmental standard for Spain, Italy & Greece)
	X	Land Acquisition (i.e. location, quantity)
	X	Technical Operating Manuals
	X	Feasibility/Constructibility in FY
	X	Historical Preservation
	X	Does the facility have an overhead crane requirement?
	X	Navy Crane Center contacted to assist with dev. of crane estimate (lifting capacity < 10-tons)?
	X	Navy Crane Center contacted to coord. procurement and timelines (lifting capacity >= 10-tons)?

Yes	No	
X		Physical Security:

- [ ] Shielding
- [ ] SCIF
- [x] Fencing
- [ ] IDS
- [ ] Other Type:

A. Estimated Design Data:

1. Status:

(A) Date design or Parametric Cost Estimate started	02/2015
(B) Date 35% Design or Parametric Cost Estimate complete	01/2016
(C) Date design completed	07/2016
(D) Percent completed as of September 2015	15%
(E) Percent completed as of January 2016	35%
(F) Type of design contract	Design Bid Build
(G) Parametric Estimate used to develop cost	Yes
(H) Energy Study/Life Cycle Analysis performed	Yes

2. Basis:

(A) Standard or Definitive Design	No
(B) Where design was previously used	

3. Total cost (C) = (A) + (B) = (D) + (E):

(A) Production of plans and specifications	$600
(B) All other design costs	$250
(C) Total	$850

1. Component NAVY	FY 2017 MILITARY CONSTRUCTION PROGRAM	2. Date 06 JAN 2016

3. Installation(SA) and Location/UIC: M00146 MCAS CHERRY POINT NC CHERRY POINT MCAS, NORTH CAROLINA	4. Project Title Central Heating Plant Conversion

5. Program Element	6. Category Code	7. Project Number	8. Project Cost ($000)
0202176M	82112	P224	12,515

(D) Contract	$700
(E) In-house	$150
4. Contract award:	03/2017
5. Construction start:	04/2017
6. Construction complete:	08/2018

B. Equipment associated with this project which will be provided from other appropriations:

Major Equipment	Funding Source	Fund Year	Installation Start-End Mo/Yr		Shakedown Start-End Mo/Yr		IOC Date Mo/Yr	Cost
CCTV	PMC	2018	09/2018	11/2018	12/2018	02/2018	03/2018	100,000

JOINT USE CERTIFICATION:

The Director Land Use and Military Construction Branch, Installations and Logistics Department, Headquarters Marine Corps certifies that this project has been considered for joint use potential. Unilateral Construction is recommended. This is an installation utility/infrastructure project and does not qualify for joint use at this location, however, all tenants on this installation are benefited by this project.

Activity POC: Project Development Lead Phone No: 252-466-4640

Attachments:

MILCON CHECKLIST
Economic Analysis
Site Plan
Facility Planning Document(s)/P-80 Calculations

DD Form 1354 Addendum

CLASS 2 PROPERTY RECORD DATA

ACTIVITY UIC: _____DD Form 1354, Item 6
ACTIVITY NAME: _____DD Form 1354, Item 5
SPEC AREA_____
PR NO _____
FACILITY NO: _____DD Form 1354, Item 11

LOCATION GENERAL INFO
COUNTRY: iNFADS fills this based on UIC and Special Area
RPTG-CLMT-UIC _____
ACTION TYPE _____(Acquisition, Capital Improvement, Disposal)
STATE: iNFADS fills this based on UIC and Special Area
COUNTY: iNFADS fills this based on UIC and Special Area
CITY: iNFADS fills this based on UIC and Special Area
FACILITY NAME: _____Completed by gaining installation
MAP GRID: _____Completed by gaining installation
FORMER ACTIVITY UIC: _____DD Form 1354, Item 1, Transfer only
FORMER PR NO.: _____Transfers within Dept of Navy only
FACILITY TYPE: _____Determined by Prime Use Category Code
FAMILY HOUSING INDICATOR: _____ Y/N

MEASUREMENTS
LENGTH_____
WIDTH_____
HEIGHT_____
DEPTH_____
AREA/UM_____
STORIES_____
IRREGULAR_____(Y or N)
ATTIC____ (Y or N)
BASEMENT____(Y or N)
MEZZANINE___(Y or N)
PENTHOUSE____(Y or N)

CONSTRUCTION
YEAR BUILT_____ (New Construction)
YEAR IMPROVED _____ (Capital Improvement)
CURR PROJ NO_____ (Capital Improvement)

DD Form 1354 Addendum

ORIG PROJ NO_____ (New Construction)
CONSTRUCTION TYPE_____(P, S, T, or R)
HERITAGE ASSET DATA –_____ Transfers only

MAINTENANCE
PRIME USE CAT CODE_____ (Largest Category Code for facility on DD Form 1354, Item 12)
MAINT FUND CODE_____ (Supplied by gaining installation)
MAINT RESP_____ (Supplied by gaining installation)
COST REF DOCUMENT NUMBERS: _____DD Form 1354, Item 7

EXCESS / DISPOSAL (DISPOSAL DD FORM 1354 ONLY)
EXCESS ACTION CODE_____
EXCESS ACTION DATE_____
DISPOSAL METHOD_____
DISPOSAL DATE_____
EFD DISPOSAL CONTRACT_____
GSA DISPOSAL CONTRACT_____
DISP CONSOL PR_____

STATUS / UTILIZATION
USER UIC/OG ID_____ (Supplied by gaining installation)
CATEGORY CODE_____ DD Form 1354, Item 12
USE_____(Optional)
AREA/UM_____ DD Form 1354, Items 15 and 16
OTHER/UM_____ DD Form 1354, Items 17 and 18
ALT/UM _____ Must be put in Remarks section of DD Form 1354, where applicable.

SECTION 01 32 17.00 20

NETWORK ANALYSIS SCHEDULES (NAS)
09/15

PART 1 GENERAL

1.1 DESCRIPTION

The Contractor is responsible for scheduling procurement, Contractor quality control and construction, acceptance testing and training. Refer to Specification Section 01 33 00 SUBMITTAL PROCEDURES to determine if any items require Government approval prior to construction; If any are required, that submittal review time shall be included in the schedule.

The schedule is a tool to manage the project, both for Contractor and Government activities. It will also be used to report progress and evaluate time extensions. If cost-loaded, it will provide the basis for progress payments.

The Contractor shall use the Critical Path Method (CPM) and the Precedence Diagram Method (PDM) to satisfy time and cost applications. For consistency, when scheduling software terminology is used in this specification, the terms in Primavera's scheduling programs are used.

1.2 SUBMITTALS

Government approval is required for submittals with a "G" designation; submittals not having a "G" designation are for Contractor Quality Control approval. Submit the following in accordance with Section 01 33 00 SUBMITTAL PROCEDURES:

SD-01 Preconstruction Submittals

Qualifications; G

Baseline Network Analysis Schedule (NAS); G

SD-07 Certificates

Monthly Network Analysis Schedule Update; G

SD-11 Closeout Submittals

As-Built Schedule; G

1.3 SCHEDULE ACCEPTANCE PRIOR TO START OF WORK

The Contracting Officer and Contractor shall participate in a preliminary meeting(s) to discuss the proposed schedule and requirements of this section prior to the Contractor preparing the Project Baseline Schedule.

Government review comments on the Contractor's schedule(s) shall not relieve the Contractor from compliance with requirements of the Contract Documents.

Only bonds shall be paid prior to acceptance of the Baseline Network Analysis Schedule (NAS).

The acceptance of a Baseline NAS is a condition precedent to:

a. The Contractor starting work on the demolition or construction stage(s) of the contract.

b. Processing Contractor's pay request(s) for construction activities/items of work.

c. Review of any schedule updates.

Submittal of the Baseline Network Analysis Schedule, and subsequent schedule updates, shall be understood to be the Contractor's certification that the submitted schedule meets all of the requirements of the Contract Documents, represents the Contractor's plan on how the work shall be accomplished, and accurately reflects the work that has been accomplished and how it was sequenced (as-built logic).

1.4 SOFTWARE

Project schedules must be prepared and maintained using Primavera P6 or current mandated scheduling program. Save files in Concentric P6 or current mandated scheduling program file format, compatible with the Governments version of the scheduling program. Importing data into P6/current mandated scheduling program using data conversion techniques or third party software will be cause for rejection of the submitted schedule.

1.5 QUALIFICATIONS

The designated Scheduler for the project shall have prepared and maintained at least 3 previous schedules of similar size and complexity as this contract using Primavera P3, Primavera SureTrak, or Primavera P6. A resume outlining the qualifications of the Scheduler shall be submitted for acceptance to the Contracting Officer. Payment will not be processed until an acceptable Scheduler is provided.

1.6 NETWORK SYSTEM FORMAT

The system shall include time scaled logic diagrams and specified reports.

1.6.1 Diagrams

Provide Time-scaled Logic Diagram printed in color on ANSI D size sheets. The diagram shall clearly show activities on the critical path. Critical path items must be red in color. Include the following information for each activity:

a. Activity ID

b. Activity Description

c. Original Duration in Work Days

d. Remaining duration

e. Percent Complete

f. Early Start Date

g. Early Finish Date

h. Total Float

1.6.2 Schedule Activity Properties and Level of Detail

The NAS shall identify all Government, Construction Quality Management (CQM), Construction activities planned for the project and all other activities that could impact project completion if delayed. Separate activities shall be created for each Phase, Area, Floor Level and Location the activity is occurring. Activity categories included in the schedule are specified below.

With the exception of the Contract Award and Contract Completion Date (CCD) milestone activities, no activity shall be open-ended; each activity shall have predecessor and successor ties. Once an activity exists on the schedule it may not be deleted or renamed to change the scope of the activity and shall not be removed from the schedule logic without approval from the Contracting Officer. The ID number for a deleted activity shall not be re-used for another activity. No more than 20 percent of the activities shall be critical or near critical. Critical is defined as having zero days of Total Float. "Near Critical" is defined as having Total Float of 1 to 14 days. Contractor activities shall be driven by calendars that reflect Saturdays, Sundays and all Federal Holidays as non-work days.

1.6.2.1 Activity Categories

a. Procurement Activities: Examples of procurement activities include, but are not limited to; Material/equipment submittal preparation, submittal and approval of material/equipment; material/equipment fabrication and delivery, and material/equipment on-site. As a minimum, separate procurement activities will be provided for critical items, long lead items, items requiring government approval and material/equipment procurement for which payment will be requested in advance of installation. The Contractor shall show each delivery with relationship tie to the Construction Activity specifically for the delivery.

b. Government Activities: Government and other agency activities that could impact progress shall be clearly identified. Government activities include, but are not limited to; Government approved submittal reviews, Government conducted inspections/tests, environmental permit approvals by State regulators, utility outages, Design Start, Construction Start, (including Design/Construction Start for each Fast-Track Phase, and delivery of Government Furnished Material/Equipment.

c. Construction Quality Management (CQM) Activities: CQM Activities shall identify the Preparatory Phase and Initial Phase for each Definable Feature of Work identified in the Contractor's Quality Control Plan. These activities shall be added to each Three-Week Look Ahead Schedule referenced in the paragraph entitled "THREE-WEEK LOOK AHEAD SCHEDULE" and will also be included in each monthly update. The Follow-up Phase will be represented by the Construction Activities in the Baseline Schedule and in the schedule updates.

d. Construction Activities: No on-site construction activity shall have a duration in excess of 20 working days. Separate construction

activities shall be created for each Phase, Area, Floor Level and Location the activity is occurring. Contractor activities will be driven by calendars that reflect Saturdays, Sundays and all Federal Holidays as non-work days, unless otherwise defined in this contract.

e. Turnover and Closeout Activities: Include a separate section with all items on the Facility Turnover Checklist that are applicable to this project. The checklist will be provided at the Preconstruction Meeting. As a minimum, this will include all testing, specialized inspection activities, Pre-Final inspection, Punch List Completion, Final Inspection and Acceptance. Add a milestone for the Facility Turnover Planning Meeting at approximately 75 percent construction contract completion or three to six months prior to BOD, whichever is sooner.

1.6.2.2 Contract Milestones and Constraints

a. Project Start Date Milestones: The Contractor shall include as the first activity on the schedule a start milestone titled "Contract Award", which shall have a Mandatory Start constraint equal to the Contract Award Date.

b. Projected Completion Milestone: The Contractor shall include an unconstrained finish milestone on the schedule titled "Projected Completion". Projected Completion is defined as the point in time the Government would consider the project complete and ready for its intended use. This milestone shall have the Contract Completion (CCD) milestone as its only successor.

c. Contract Completion Date (CCD) Milestone: The Contractor shall include as the last activity on the schedule a finish milestone titled "Contract Completion (CCD)", which shall have a Mandatory Finish constraint equal to the current Contract Completion Date. Calculation of schedule updates shall be such that if the finish of the "Projected Completion" milestone falls after the contract completion date, then negative float will be calculated on the longest path and if the finish of the "Projected Completion" milestone falls before the contract completion date, the float calculation shall reflect positive float on the longest path. The only predecessor to the Contract Completion Date Milestone shall be the Projected Completion milestone.

d. Plant Off of Coal Milestone: Contractor shall include an unconstrained finish milestone on the schedule titled "Plant Off of Coal." Plant Off of Coal is defined as the point in time the plant is no longer capable of burning coal in any of the boilers.

1.6.2.3 Activity Code

At a minimum, the Contractor shall establish activity codes identified in this specification and 3 additional activity codes identified by the Contracting Officer. Once established, activity codes and values cannot be changed without approval by the Contracting Officer.

a. Phase: All activities shall be assigned a 4-digit code value based on the contract phase it occurs in.

b. Area Code: All activities shall be assigned an area code value identifying the Area in which the activity occurs. Activities shall not belong to more than one area. Area is defined as a distinct

space, function or activity category; such as, separate structure(s), sitework, project summary, construction quality management, material/equipment procurement, etc.

c. Work Item: All activities in the project schedule shall be assigned a 4-digit Work Item code value. Examples of Work Item code values include but are not limited to water lines, drain lines, building pad and foundation, slab on grade, walls and columns, suspended slab, roof structure, roofing, exterior finish systems, interior rough-in, and finishes, etc.

d. Location 1: Assign a 4-digit Location 1 code value to activities associated with multistory structures. Code values are used to identify the floor level where an activity is occurring.

e. Location 2: Assign a 4-digit Location 2 code value to all activities to identify the location within an Area, Work Item or Building Level that an activity is occurring.

f. Responsibility Code: All activities in the project schedule shall be identified with the party responsible for completing the task. Activities shall not belong to more than one responsible party.

1.6.2.4 Anticipated Weather Delays

The Contractor shall use the National Oceanic and Atmospheric Administration's (NOAA) historical monthly averages for the NOAA location closest to the project site as the basis for establishing a "Weather Calendar" showing the number of anticipated non-workdays for each month due to adverse weather, Saturdays, Sundays and all Federal Holidays as non-work days.

Assign the Weather Calendar to any activity that could be impacted by adverse weather. The Contracting Officer will issue a modification in accordance with the contract clauses, giving the Contractor a time extension for the difference of days between the anticipated and actual adverse weather delay if the number of actual adverse weather delay days exceeds the number of days anticipated for the month in which the delay occurs and the adverse weather delayed activities critical to contract completion. A lost workday due to weather conditions is defined as a day in which the Contractor cannot work at least 50 percent of the day on the impacted activity.

1.6.2.5 Cost Loading

a. Cost Loading Activities: Material and Equipment Costs for which payment will be requested in advance of installation shall be assigned to their respective procurement activity (i.e., the material/equipment on-site activity). All other construction costs shall be assigned to their respective Construction Activities. The value of inspection/testing activities will not be less than 10 percent of the total costs for Procurement and Construction Activities. Evenly disperse overhead and profit to each activity over the duration of the project.

b. Quantities and Units of Measure: Each cost loaded activity shall have a detailed quantity breakdown and unit of measure.

1.6.3 Schedule Software Settings and Restrictions

a. Activity Constraints: Date/time constraint(s), other than those required by the contract, will not be allowed unless accepted by the Contracting Officer. Identify any constraints proposed and provide an explanation for the purpose of the constraint in the Narrative Report.

b. Default Progress Data Disallowed: Actual Start and Actual Finish dates on the CPM schedule shall match the dates on the Contractor Quality Control and Production Reports.

c. Software Settings: Schedule calculations and Out-of-Sequence progress (if applicable) shall be handled through Retained Logic, not Progress Override. All activity durations and float values will be shown in days. Activity progress will be shown using Remaining Duration. Default activity type will be set to "Task". The project "Must Finish By" date shall be left blank.

1.6.4 Required Tabular Reports

The following reports shall be included with the schedule submittal:

a. Log Report: Listing of all changes made between the previous schedule and current updated schedule.

b. Narrative Report: Identify and justify; 1) Progress made in each area of the project; 2) Critical Path; 3) Date/time constraint(s), other than those required by the contract 3) Changes in the following; added or deleted activities, original and remaining durations for activities that have not started, logic, milestones, planned sequence of operations, critical path, and cost loading; 4) Any decrease in previously reported activity Earned Amount; 5) Pending items and status thereof, including permits, changes orders, and time extensions; 6) Status of Contract Completion Date and interim milestones; 7) Current and anticipated delays (describe cause of delay and corrective actions(s)); and 8) Description of current and future schedule problem areas. Each entry in the narrative report will cite the respective Activity ID and Activity Description, the date and reason for the change, and description of the change.

c. Earned Value Report: Listing all activities having a budget amount cost loaded. Compilation of total earnings on the project from notice to proceed to current progress payment request. Group and sort activities as directed by the Contracting Officer. Show current budget, previous physical percent complete, to-date physical percent complete, previous earned value, to-date earned value and cost to complete on the report for each activity:

d. Schedule Variance Control (SVC) Diagram: With each schedule submission, provide a SVC diagram showing 1) Cash Flow S-Curves indicating planned project cost based on projected early and late activity finish dates and 2) Earned Value to-date. Revise Cash Flow S-Curves when the contract is modified, or as directed by the Contracting Officer.

1.7 SUBMISSION AND ACCEPTANCE

1.7.1 Monthly Network Analysis Updates

Contractor and Government representatives shall meet at monthly intervals to review and agree on the information presented in the updated project schedule. The submission of an acceptable, updated schedule to the Government is a condition precedent to the processing of the Contractor's pay request. If a Schedule of Prices is the basis for progress payments, it shall be consistent with the logic and activity breakdowns on the progress schedule. If progress payments are based on a cost-loaded schedule, the Contractor and Government shall agree on percentage of payment for each activity progressed during the update period.

Provide the following with each Schedule submittal:

a. Time Scaled Logic Diagram.

b. Reports listed in paragraph entitled "Required Tabular Reports."

c. Data disks containing the project schedule. Include the back-up native '.prx/current' mandated schedule program files.

1.7.2 As-Built Schedule

As a condition precedent to the release of retention and making final payment, submit an "As-Built Schedule," as the last schedule update showing all activities at 100 percent completion. This schedule shall reflect the exact manner in which the project was actually constructed.

1.8 CONTRACT MODIFICATION

Submit a Time Impact Analysis with each cost and time proposal for a proposed change. Time Impact Analysis (TIA) shall illustrate the influence of each change or delay on the Contract Completion Date or milestones. No time extensions will be granted nor delay damages paid unless a delay occurs which consumes all available Project Float, and extends the Projected Finish beyond the Contract Completion Date.

a. Each TIA shall be in both narrative and schedule form demonstrating the delay impact. The TIA shall identify the predecessors to the new activities and demonstrate the impacts to successor activities. The Contractor shall run the schedule calculations and submit the impacted schedule with the proposal or claim.

b. The TIA schedule submitted with the proposal shall show all activity progress as of the date of the proposal. If the impact to the schedule occurs prior to the proposal submission, the TIA schedule shall be updated to show all activity progress as of the time of the impact. If the proposed change does not impact the CCD, no TIA shall be required.

c. Submit Data disks containing the TIA schedule. Include the back-up native .prx/current mandated schedule program files.

d. Unless the Contracting Officer requests otherwise, only conformed contract modifications shall be added into the Project NAS.

1.9 PROJECT FLOAT

Project Float is the length of time between the Contractor's Projected Finish Milestone and the Contract Completion Date Milestone. Project Float available in the schedule, at any time shall not be for the exclusive use of either the Government or the Contractor.

1.10 THREE-WEEK LOOK AHEAD SCHEDULE

The Contractor shall prepare and issue a 3-Week Look Ahead schedule to provide a more detailed day-to-day plan of upcoming work identified on the Project Network Analysis Schedule. The work plans shall be keyed to NAS activity numbers and updated each week to show the planned work for the current and following two-week period. Additionally, include upcoming outages, closures, preparatory meetings, and initial meetings. Identify critical path activities on the Three-Week Look Ahead Schedule. The detail work plans are to be bar chart type schedules, maintained separately from the Project NAS on an electronic spreadsheet program and printed on 8-1/2 by 11 sheets as directed by the Contracting Officer. Activities shall not exceed 5 working days in duration and have sufficient level of detail to assign crews, tools and equipment required to complete the work. Three hard copies and one electronic file of the 3-Week Look Ahead Schedule shall be delivered to the Contracting Officer no later than 8 a.m. each Monday and reviewed during the weekly CQC Coordination Meeting.

PART 2 PRODUCTS

Not used.

PART 3 EXECUTION

Not used.

-- End of Section --

SECTION 01 33 00

SUBMITTAL PROCEDURES
11/15

PART 1 GENERAL

1.1 DEFINITIONS

1.1.1 Submittal Descriptions (SD)

Submittals requirements are specified in the technical sections. Submittals are identified by Submittal Description (SD) numbers and titles as follows:

SD-01 Preconstruction Submittals

Submittals which are required prior to commencing work on site.

Certificates of insurance

Surety bonds

List of proposed Subcontractors

List of proposed products

Construction Progress Schedule

Network Analysis Schedule (NAS)

Submittal register

Schedule of prices

Health and safety plan

Work plan

Quality control(QC) plan

Environmental protection plan

SD-02 Shop Drawings

Drawings, diagrams and schedules specifically prepared to illustrate some portion of the work.

Diagrams and instructions from a manufacturer or fabricator for use in producing the product and as aids to the Contractor for integrating the product or system into the project.

Drawings prepared by or for the Contractor to show how multiple systems and interdisciplinary work will be coordinated.

SD-03 Product Data

Catalog cuts, illustrations, schedules, diagrams, performance charts,

instructions and brochures illustrating size, physical appearance and other characteristics of materials, systems or equipment for some portion of the work.

Samples of warranty language when the contract requires extended product warranties.

SD-04 Samples

Fabricated or unfabricated physical examples of materials, equipment or workmanship that illustrate functional and aesthetic characteristics of a material or product and establish standards by which the work can be judged.

Color samples from the manufacturer's standard line (or custom color samples if specified) to be used in selecting or approving colors for the project.

Field samples and mock-ups constructed on the project site establish standards by which the ensuring work can be judged. Includes assemblies or portions of assemblies which are to be incorporated into the project and those which will be removed at conclusion of the work.

SD-05 Design Data

Design calculations, mix designs, analyses or other data pertaining to a part of work.

SD-06 Test Reports

Report signed by authorized official of testing laboratory that a material, product or system identical to the material, product or system to be provided has been tested in accord with specified requirements. (Testing must have been within three years of date of contract award for the project.)

Report which includes findings of a test required to be performed by the Contractor on an actual portion of the work or prototype prepared for the project before shipment to job site.

Report which includes finding of a test made at the job site or on sample taken from the job site, on portion of work during or after installation.

Investigation reports.

Daily logs and checklists.

Final acceptance test and operational test procedure.

SD-07 Certificates

Statements printed on the manufacturer's letterhead and signed by responsible officials of manufacturer of product, system or material attesting that product, system or material meets specification requirements. Must be dated after award of project contract and clearly name the project.

Document required of Contractor, or of a manufacturer, supplier,

installer or Subcontractor through Contractor, the purpose of which is to further quality of orderly progression of a portion of the work by documenting procedures, acceptability of methods or personnel qualifications.

Confined space entry permits.

Text of posted operating instructions.

SD-08 Manufacturer's Instructions

Preprinted material describing installation of a product, system or material, including special notices and (MSDS)concerning impedances, hazards and safety precautions.

SD-09 Manufacturer's Field Reports

Documentation of the testing and verification actions taken by manufacturer's representative at the job site, in the vicinity of the job site, or on a sample taken from the job site, on a portion of the work, during or after installation, to confirm compliance with manufacturer's standards or instructions. The documentation must be signed by an authorized official of a testing laboratory or agency and must state the test results; and indicate whether the material, product, or system has passed or failed the test.

Factory test reports.

SD-10 Operation and Maintenance Data

Data that is furnished by the manufacturer, or the system provider, to the equipment operating and maintenance personnel, including manufacturer's help and product line documentation necessary to maintain and install equipment. This data is needed by operating and maintenance personnel for the safe and efficient operation, maintenance and repair of the item.

This data is intended to be incorporated in an operations and maintenance manual or control system.

SD-11 Closeout Submittals

Documentation to record compliance with technical or administrative requirements or to establish an administrative mechanism.

Special requirements necessary to properly close out a construction contract. For example, Record Drawings and as-built drawings. Also, submittal requirements necessary to properly close out a major phase of construction on a multi-phase contract.

Interim "DD Form 1354" with cost breakout for all assets 30 days prior to facility turnover.

1.1.2 Approving Authority

Office or designated person authorized to approve submittal.

1.1.3 Work

As used in this section, on- and off-site construction required by contract documents, including labor necessary to produce submittals, construction, materials, products, equipment, and systems incorporated or to be incorporated in such construction.

1.2 SUBMITTALS

Government approval is required for submittals with a "G" designation; submittals not having a "G" designation are for Contractor QC approval. Submit the following in accordance with this section.

SD-01 Preconstruction Submittals

Submittal register; G

1.3 SUBMITTAL CLASSIFICATION

Submittals are classified as follows:

1.3.1 Government Approved G

Government approval is required for extensions of design, critical materials, deviations, equipment whose compatibility with the entire system must be checked, and other items as designated by the Contracting Officer. Within the terms of the Contract Clause entitled, "Specifications and Drawings for Construction," they are considered to be "shop drawings."

1.3.1.1 Information Only

Submittals not requiring Government approval will be for information only. They are not considered to be "shop drawings" within the terms of the Contract Clause referred to above.

1.3.1.2 Sustainability Submittals (S)

Submittals for Guiding Principle Validation (GPV) or Third Party Certification (TPC) are indicated with an "S" designation. Submit the information required by the technical sections that demonstrates compliance with the sustainable requirement. If the submittal is also provided under another another SD, provide a separate submittal under SD-11 that only provides that portion of the submittal that demonstrates compliance with the sustainable requirement. Schedule submittals for these items throughout the course of construction as provided; do not wait until closeout.

1.4 FORWARDING SUBMITTALS REQUIRING GOVERNMENT APPROVAL

1.4.1 Submittals Required from the Contractor

As soon as practicable after award of contract, and before procurement of fabrication, forward to NAVFAC MID-LANT MCIPT, Attn: Scott Kozenski, Code OPQC15, Marine Corps IPT, 9324 Virginia Avenue, Norfolk, Virginia, 23511-3095 and Architect-Engineer: Jacobs, Attn: Michele Holland, 333 Fayetteville Street, Suite 1100, Raleigh, NC 27601 submittals required in the technical sections of this specification, including shop drawings,

product data and samples. One copy of the transmittal form for all submittals shall be forwarded to the Facilities Engineering and Acquisition Division (FEAD).

Marine Corps North Carolina IPT will review and approve for the Contracting Officer those submittals reserved for Contracting Officer approval to verify submittals comply with the contract requirements.

1.4.1.1 O&M Data

Marine Corps North Carolina IPT will review and approve for the Contracting Officer O&M Data to verify the submittals comply with the contract requirements; submit data specified for a given item within 30 calendar days after the item is delivered to the contract site.

a. In the event the Contractor fails to deliver O&M Data within the time limits specified, the Contracting Officer may withhold from progress payments 50 percent of the price of the item with which such O&M Data are applicable.

1.4.1.2 Submittals Not Requiring Government Approval Or Surveillance

Construction submittals not requiring Government approval or surveillance shall be submitted for information.

1.5 PREPARATION

1.5.1 Transmittal Form

Transmit each submittal, except sample installations and sample panels to office of approving authority. Transmit submittals with transmittal form prescribed by Contracting Officer and standard for project. On the transmittal form identify Contractor, indicate date of submittal, and include information prescribed by transmittal form and required in paragraph entitled, "Identifying Submittals," of this section. Process transmittal forms to record actions regarding sample installations or panels.

1.5.2 Identifying Submittals

When submittals are provided by a subcontractor, the Prime Contractor is to prepare, review and stamp with Contractor's approval all specified submittals prior to submitting for Government approval.

Identify submittals, except sample installations and sample panels, with the following information permanently adhered to or noted on each separate component of each submittal and noted on transmittal form. Mark each copy of each submittal identically, with the following:

a. Project title and location.

b. Construction contract number.

c. Date of the drawings and revisions.

d. Name, address, and telephone number of subcontractor, supplier, manufacturer and any other subcontractor associated with the submittal.

e. Section number of the specification section by which submittal is

required.

f. Submittal description (SD) number of each component of submittal.

g. When a resubmission, add alphabetic suffix on submittal description, for example, submittal 18 would become 18A, to indicate resubmission.

h. Product identification and location in project.

1.5.3 Electronic Submittals

Construction Submittals for this project shall be made electronically utilizing software provided by the Contractor and approved by the Government and the DOR. Electronic Working and Record Drawings shall be submitted in accordance with specification sections of this Project. Provide eOMSI submittals in accordance with specification section 01 78 24.00 20 FACILITY ELECTRONIC OPERATION AND MAINTENANCE SUPPORT INFORMATION (eOMSI).

1.5.3.1 Identification and Information

Identify and incorporate information in each electronic submittal file as follows:

a. Assemble complete submittal package into a single indexed electronic file incorporating submittal requirements of a single Specification Section and transmittal form with links enabling navigation to each item.

b. Name file with the project identifier and Specification Section number, and submittal number, including revision identifier if required as follows:

   File name shall use project P-number followed by a dash, the six or ten digit Specification Section number followed by a dash, and then a sequential number (e.g., P601-04 20 00-001 or P601-07 21 00.00 20-001). Resubmittals shall include an alphabetic suffix after the sequential number (e.g., P601-04 20 00-001A or P601-07 21 00.00 20-001A).

1.5.3.2 General Electronic Submittal Procedure Requests

Post electronic submittals as PDF electronic files directly to Contractor's project electronic site specifically established for the Project.

a. DOR will post electronic annotated files.

b. Contractor shall annotate and retain one copy of file as an electronic Project record document file.

c. Contractor shall maintain three (3) hard copies of all submittals: one copy to be maintained in the field during construction, one for the Construction Management Engineer (CME) office, and one for the contract files.

d. Contractor shall provide upon completion of the project, CDs which have all reviewed and marked up submittals for the project.

1.5.4 Format for SD-02 Shop Drawings

a. Shop drawings are not to be less than 8 1/2 by 11 inches nor more than 30 by 42 inches, except for full size patterns or templates. Prepare drawings to accurate size, with scale indicated, unless other form is required. Drawings are to be suitable for reproduction and be of a quality to produce clear, distinct lines and letters with dark lines on a white background.

b. Present 8 1/2 by 11 inches sized shop drawings as part of the bound volume for submittals required by section. Present larger drawings in sets.

c. Include on each drawing the drawing title, number, date, and revision numbers and dates, in addition to information required in paragraph entitled "Identifying Submittals."

d. Number drawings in a logical sequence. Contractors may use their own number system. Each drawing is to bear the number of the submittal in a uniform location adjacent to the title block. Place the Government contract number in the margin, immediately below the title block, for each drawing.

e. Reserve a blank space, no smaller than 4 inches square on the right hand side of each sheet for the Government disposition stamp.

f. Dimension drawings, except diagrams and schematic drawings; prepare drawings demonstrating interface with other trades to scale. Use the same unit of measure for shop drawings as indicated on the contract drawings. Identify materials and products for work shown.

g. Include the nameplate data, size and capacity on drawings. Also include applicable federal, military, industry and technical society publication references.

1.5.5 Format of SD-03 Product Data and SD-08 Manufacturer's Instructions

a. Present product data submittals for each section as a complete, bound volume. Include table of contents, listing page and catalog item numbers for product data.

b. Indicate, by prominent notation, each product which is being submitted; indicate specification section number and paragraph number to which it pertains.

c. Supplement product data with material prepared for project to satisfy submittal requirements for which product data does not exist. Identify this material as developed specifically for project, with information and format as required for submission of SD-07 Certificates.

e. Include the manufacturer's name, trade name, place of manufacture, and catalog model or number on product data. Also include applicable federal, military, industry and technical society publication references. Should manufacturer's data require supplemental information for clarification, submit as specified for SD-07 Certificates.

f. Where equipment or materials are specified to conform to industry and

technical society reference standards of the organizations such as American National Standards Institute (ANSI), ASTM International (ASTM), National Electrical Manufacturer's Association (NEMA), Underwriters Laboratories (UL), and Association of Edison Illuminating Companies (AEIC), submit proof of such compliance. The label or listing by the specified organization will be acceptable evidence of compliance. In lieu of the label or listing, submit a certificate from an independent testing organization, competent to perform testing, and approved by the Contracting Officer. State on the certificate that the item has been tested in accordance with the specified organization's test methods and that the item complies with the specified organization's reference standard.

g. Collect required data submittals for each specific material, product, unit of work, or system into a single submittal and marked for choices, options, and portions applicable to the submittal. Mark each copy of the product data identically. Partial submittals will not be accepted for expedition of construction effort.

h. Submit manufacturer's instructions prior to installation.

1.5.6 Format of SD-04 Samples

a. Furnish samples in sizes below, unless otherwise specified or unless the manufacturer has prepackaged samples of approximately same size as specified:

(1) Sample of Equipment or Device: Full size.

(2) Sample of Materials Less Than 2 by 3 inches: Built up to 8 1/2 by 11 inches.

(3) Sample of Materials Exceeding 8 1/2 by 11 inches: Cut down to 8 1/2 by 11 inches and adequate to indicate color, texture, and material variations.

(4) Sample of Linear Devices or Materials: 10 inch length or length to be supplied, if less than 10 inches. Examples of linear devices or materials are conduit and handrails.

(5) Sample of Non-Solid Materials: Pint. Examples of non-solid materials are sand and paint.

(6) Color Selection Samples: 2 by 4 inches. Where samples are specified for selection of color, finish, pattern, or texture, submit the full set of available choices for the material or product specified. Sizes and quantities of samples are to represent their respective standard unit.

(7) Sample Panel: 4 by 4 feet.

(8) Sample Installation: 100 square feet.

b. Samples Showing Range of Variation: Where variations in color, finish, pattern, or texture are unavoidable due to nature of the materials, submit sets of samples of not less than three units showing extremes and middle of range. Mark each unit to describe its relation to the range of the variation.

c. Reusable Samples: Incorporate returned samples into work only if so specified or indicated. Incorporated samples are to be in undamaged condition at time of use.

d. Recording of Sample Installation: Note and preserve the notation of area constituting sample installation but remove notation at final clean up of project.

e. When color, texture or pattern is specified by naming a particular manufacturer and style, include one sample of that manufacturer and style, for comparison.

1.5.7 Format of SD-05 Design Data and SD-07 Certificates

Provide design data and certificates on 8 1/2 by 11 inches paper. Provide a bound volume for submittals containing numerous pages.

1.5.8 Format of SD-06 Test Reports and SD-09 Manufacturer's Field Reports

a. Provide reports on 8 1/2 by 11 inches paper in a complete bound volume.

b. Indicate by prominent notation, each report in the submittal. Indicate specification number and paragraph number to which it pertains.

1.5.9 Format of SD-10 Operation and Maintenance Data (O&M)

Comply with the requirements specified in Section 01 78 23 OPERATION AND MAINTENANCE DATA and 01 78 24.00 20 FACILITY ELECTRONIC OPERATION AND MAINTENANCE SUPPORT INFORMATION (eOMSI)for O&M Data format.

1.5.10 Format of SD-01 Preconstruction Submittals and SD-11 Closeout Submittals

When submittal includes a document which is to be used in project or become part of project record, other than as a submittal, do not apply Contractor's approval stamp to document, but to a separate sheet accompanying document.

1.6 QUANTITY OF SUBMITTALS

1.6.1 Number of Copies of SD-02 Shop Drawings

Submit six copies of submittals of shop drawings requiring review and approval only by QC organization and seven copies of shop drawings requiring review and approval by Contracting Officer.

1.6.2 Number of Copies of SD-03 Product Data and SD-08 Manufacturer's Instructions

Submit in compliance with quantity requirements specified for shop drawings.

1.6.3 Number of Samples SD-04 Samples

a. Submit two samples, or two sets of samples showing range of variation, of each required item. One approved sample or set of samples will be retained by approving authority and one will be returned to Contractor.

b. Submit one sample panel or provide one sample installation where directed. Include components listed in technical section or as directed.

c. Submit one sample installation, where directed.

d. Submit one sample of non-solid materials.

1.6.4 Number of Copies SD-05 Design Data and SD-07 Certificates

Submit in compliance with quantity requirements specified for shop drawings.

1.6.5 Number of Copies SD-06 Test Reports and SD-09 Manufacturer's Field Reports

Submit in compliance with quantity and quality requirements specified for shop drawings other than field test results that will be submitted with QC reports.

1.6.6 Number of Copies of SD-10 Operation and Maintenance Data

Submit Five copies of O&M Data to the Contracting Officer for review and approval.

1.6.7 Number of Copies of SD-01 Preconstruction Submittals and SD-11 Closeout Submittals

Unless otherwise specified, submit two sets of administrative submittals.

1.6.8 Quantity of Submittals for Information

Submit two copies of submittals for information to the Contracting Officer.

1.7 INFORMATION ONLY SUBMITTALS

Normally submittals for information only will not be returned. Approval of the Contracting Officer is not required on information only submittals. The Government reserves the right to require the Contractor to resubmit any item found not to comply with the contract. This does not relieve the Contractor from the obligation to furnish material conforming to the plans and specifications; will not prevent the Contracting Officer from requiring removal and replacement of nonconforming material incorporated in the work; and does not relieve the Contractor of the requirement to furnish samples for testing by the Government laboratory or for check testing by the Government in those instances where the technical specifications so prescribe.

1.8 VARIATIONS

Variations from contract requirements require both Designer of Record (DOR) and Government approval pursuant to contract Clause FAR 52.236-21 and will be considered where advantageous to Government.

1.8.1 Considering Variations

Discussion with Contracting Officer prior to submission, after consulting with the DOR, will help ensure functional and quality requirements are met and minimize rejections and re-submittals. When contemplating a variation

which results in lower cost, consider submission of the variation as a Value Engineering Change Proposal (VECP).

Specifically point out variations from contract requirements in transmittal letters. Failure to point out deviations may result in the Government requiring rejection and removal of such work at no additional cost to the Government.

1.8.2 Proposing Variations

When proposing variation, deliver written request to the Contracting Officer, with documentation of the nature and features of the variation and why the variation is desirable and beneficial to Government, including the DOR's written analysis and approval. If lower cost is a benefit, also include an estimate of the cost savings. In addition to documentation required for variation, include the submittals required for the item. Clearly mark the proposed variation in all documentation.

1.8.3 Warranting That Variations Are Compatible

When delivering a variation for approval, Contractor, including its Designer(s) of Record, warrants that this contract has been reviewed to establish that the variation, if incorporated, will be compatible with other elements of work.

1.8.4 Review Schedule Is Modified

In addition to normal submittal review period, a period of 10 working days will be allowed for consideration by the Government of submittals with variations.

1.9 SUBMITTAL REGISTER

Prepare and maintain submittal register, as the work progresses. Do not change data which is output in columns (c), (d), (e), and (f) as delivered by Government; retain data which is output in columns (a), (g), (h), and (i) as approved. A submittal register showing items of equipment and materials for which submittals are required by the specifications is provided as an attachment. This list may not be all inclusive and additional submittals may be required. The Government will provide the initial submittal register with the following fields completed, to the extent that will be required by the Government during subsequent usage. The Government provided submittal register will be in the form of a pdf file.

Column (c): Lists specification section in which submittal is required.

Column (d): Lists each submittal description (SD No. and type, e.g. SD-02 Shop Drawings) required in each specification section.

Column (e): Lists one principal paragraph in specification section where a material or product is specified. This listing is only to facilitate locating submitted requirements. Do not consider entries in column (e) as limiting project requirements.

Column (f): Indicate approving authority for each submittal.

Thereafter, the Contractor is to track all submittals by maintaining a

complete list, including completion of all data columns, including dates on which submittals are received and returned by the Government.

1.9.1 Use of Submittal Register

Submit submittal register. Submit with QC plan and project schedule. Verify that all submittals required for project are listed and add missing submittals. Coordinate and complete the following fields on the register submitted with the QC plan and the project schedule:

Column (a) Activity Number: Activity number from the project schedule.

Column (g) Contractor Submit Date: Scheduled date for approving authority to receive submittals.

Column (h) Contractor Approval Date: Date Contractor needs approval of submittal.

Column (i) Contractor Material: Date that Contractor needs material delivered to Contractor control.

1.9.2 Contractor Use of Submittal Register

Update the following fields with each submittal throughout contract.

Column (b) Transmittal Number: Contractor assigned list of consecutive numbers.

Column (j) Action Code (k): Date of action used to record Contractor's review when forwarding submittals to QC.

Column (l) List date of submittal transmission.

Column (q) List date approval received.

1.9.3 Approving Authority Use of Submittal Register

Update the following fields.

Column (b) Transmittal Number: Contractor assigned list of consecutive numbers.

Column (l) List date of submittal receipt.

Column (m) through (p)List Date related to review actions.

Column (q) List date returned to Contractor.

1.9.4 Action Codes

Entries for columns (j) and (o), are to be used are as follows (others may be prescribed by Transmittal Form):

1.9.4.1 Government Review Action Codes

"A" - "Approved as submitted"; "Completed"

"B" - "Approved, except as noted on drawings"; "Completed"

"C" - "Approved, resubmission required"; "Resubmit"

"D" - "Returned by correspondence"; "Completed"

"E" - "Disapproved (See attached)"; "Resubmit"

"F" - "Receipt acknowledged"; "Completed"

"G" - "Other (Specify)"; "Resubmit"

"X" - "Receipt acknowledged, does not comply"; "Resubmit"

1.9.4.2 Contractor Action Codes

NR - Not Received

AN - Approved as noted

A - Approved

RR - Disapproved, Revise, and Resubmit

1.9.5 Copies Delivered to the Government

Deliver one copy of submittal register updated by Contractor to Government with each invoice request.

1.10 SCHEDULING

Schedule and submit concurrently submittals covering component items forming a system or items that are interrelated. Include certifications to be submitted with the pertinent drawings at the same time. No delay damages or time extensions will be allowed for time lost in late submittals. An additional 14 calendar days will be allowed and shown on the register for review and approval of submittals for boiler and controls systems.

a. Coordinate scheduling, sequencing, preparing and processing of submittals with performance of work so that work will not be delayed by submittal processing. Allow for potential resubmittal of requirements.

b. Submittals called for by the contract documents will be listed on the register. If a submittal is called for but does not pertain to the contract work, the Contractor is to include the submittal in the register and annotate it "N/A" with a brief explanation. Approval by the Contracting Officer does not relieve the Contractor of supplying submittals required by the contract documents but which have been omitted from the register or marked "N/A."

c. Re-submit register and annotate monthly by the Contractor with actual submission and approval dates. When all items on the register have been fully approved, no further re-submittal is required.

d. Carefully control procurement operations to ensure that each individual submittal is made on or before the Contractor scheduled submittal date shown on the approved "Submittal Register."

e. Except as specified otherwise, allow review period, beginning with receipt by approving authority, that includes at least 15 working days for submittals for QC Manager approval and 20 working days for submittals for Contracting Officer approval. Period of review for submittals with Contracting Officer approval begins when Government receives submittal from QC organization.

f. For submittals requiring review by fire protection engineer, allow review period, beginning when Government receives submittal from QC organization, of 30 working days for return of submittal to the Contractor.

g. Period of review for each resubmittal is the same as for initial submittal.

1.10.1 Reviewing, Certifying, Approving Authority

The QC organization is responsible for reviewing and certifying that submittals are in compliance with contract requirements. Approving authority on submittals is QC Manager unless otherwise specified for specific submittal. At each "Submittal" paragraph in individual specification sections, a notation "G," following a submittal item, indicates Contracting Officer is approving authority for that submittal item.

1.10.2 Constraints

a. Conform to provisions of this section, unless explicitly stated otherwise for submittals listed or specified in this contract.

b. Submit complete submittals for each definable feature of work. Submit at the same time components of definable feature interrelated as a system.

c. When acceptability of a submittal is dependent on conditions, items, or materials included in separate subsequent submittals, submittal will be returned without review.

d. Approval of a separate material, product, or component does not imply approval of assembly in which item functions.

1.10.3 QC Organization Responsibilities

a. Note date on which submittal was received from Contractor on each submittal.

b. Review each submittal; and check and coordinate each submittal with requirements of work and contract documents.

c. Review submittals for conformance with project design concepts and compliance with contract documents.

d. Act on submittals, determining appropriate action based on QC organization's review of submittal.

(1) When QC Manager is approving authority, take appropriate action on submittal from the possible actions defined in paragraph entitled, "Approved/Accepted Submittals," of the section."

(2) When Contracting Officer is approving authority or when variation has been proposed, forward submittal to Government with certifying statement or return submittal marked "not reviewed" or "revise and resubmit" as appropriate. The QC organization's review of submittal determines appropriate action.

e. Ensure that material is clearly legible.

f. Stamp each sheet of each submittal with QC certifying statement or approving statement, except that data submitted in bound volume or on one sheet printed on two sides may be stamped on the front of the first sheet only.

(1) When approving authority is Contracting Officer, QC organization will certify submittals forwarded to Contracting Officer with the following certifying statement:

"I hereby certify that the (equipment) (material) (article) shown and marked in this submittal is that proposed to be incorporated with contract Number (insert contract number here), is in compliance with the contract drawings and specification, can be installed in the allocated spaces, and is submitted for Government approval.

Certified by Submittal Reviewer _____, Date _____
(Signature when applicable)

Certified by QC Manager _____, Date _____"
(Signature)

(2) When approving authority is QC Manager, QC Manager will use the following approval statement when returning submittals to Contractor as "Approved" or "Approved as Noted."

"I hereby certify that the (material) (equipment) (article) shown and marked in this submittal and proposed to be incorporated with contract Number (insert contract number here), is in compliance with the contract drawings and specification, can be installed in the allocated spaces, and is approved for use.

Certified by Submittal Reviewer _____, Date _____
(Signature when applicable)

Approved by QC Manager _____, Date _____"
(Signature)

g. Sign certifying statement or approval statement. The QC organization member designated in the approved QC plan is the person signing certifying statements. The use of original ink for signatures is required. Stamped signatures are not acceptable.

h. Update submittal register as submittal actions occur and maintain the submittal register at project site until final acceptance of all work by Contracting Officer.

i. Retain a copy of approved submittals at project site, including Contractor's copy of approved samples.

1.11 GOVERNMENT APPROVING AUTHORITY

When approving authority is Contracting Officer, the Government will:

a. Note date on which submittal was received from QC Manager.

b. Review submittals for approval within scheduling period specified and only for conformance with project design concepts and compliance with contract documents.

c. Identify returned submittals with one of the actions defined in paragraph entitled "Review Notations" of this section and with markings appropriate for action indicated.

Upon completion of review of submittals requiring Government approval, stamp and date approved submittals. Two copies of the approved submittal will be retained by the Contracting Officer and four copies of the submittal will be returned to the Contractor.

1.11.1 Review Notations

Contracting Officer review will be completed within 21 calendar days after date of submission. Submittals will be returned to the Contractor with the following notations:

a. Submittals marked "approved" or "accepted" authorize the Contractor to proceed with the work covered.

b. Submittals marked "approved as noted" "or approved except as noted, resubmittal not required," authorize the Contractor to proceed with the work covered provided he takes no exception to the corrections.

c. Submittals marked "not approved" or "disapproved," or "revise and resubmit," indicate noncompliance with the contract requirements or design concept, or that submittal is incomplete. Resubmit with appropriate changes. No work shall proceed for this item until resubmittal is approved.

d. Submittals marked "not reviewed" will indicate submittal has been previously reviewed and approved, is not required , does not have evidence of being reviewed and approved by Contractor, or is not complete. A submittal marked "not reviewed" will be returned with an explanation of the reason it is not reviewed. Resubmit submittals returned for lack of review by Contractor or for being incomplete, with appropriate action, coordination, or change.

1.12 DISAPPROVED OR REJECTED SUBMITTALS

Contractor shall make corrections required by the Contracting Officer. If the Contractor considers any correction or notation on the returned submittals to constitute a change to the contract drawings or specifications; notice as required under the clause entitled, "Changes," is to be given to the Contracting Officer. Contractor is responsible for the dimensions and design of connection details and construction of work. Failure to point out deviations may result in the Government requiring rejection and removal of such work at the Contractor's expense.

If changes are necessary to submittals, the Contractor shall make such revisions and submission of the submittals in accordance with the

procedures above. No item of work requiring a submittal change is to be accomplished until the changed submittals are approved.

1.13 APPROVED/ACCEPTED SUBMITTALS

The Contracting Officer's approval or acceptance of submittals is not to be construed as a complete check, and indicates only that the general method of construction, materials, detailing, and other information are satisfactory.

Approval or acceptance will not relieve the Contractor of the responsibility for any error which may exist, as the Contractor under the Contractor Quality Control (CQC) requirements of this contract is responsible for dimensions, the design of adequate connections and details, and the satisfactory construction of all work.

After submittals have been approved or accepted by the Contracting Officer, no resubmittal for the purpose of substituting materials or equipment will be considered unless accompanied by an explanation of why a substitution is necessary.

1.14 APPROVED SAMPLES

Approval of a sample is only for the characteristics or use named in such approval and is not be construed to change or modify any contract requirements. Before submitting samples, the Contractor to assure that the materials or equipment will be available in quantities required in the project. No change or substitution will be permitted after a sample has been approved.

Match the approved samples for materials and equipment incorporated in the work. If requested, approved samples, including those which may be damaged in testing, will be returned to the Contractor, at his expense, upon completion of the contract. Samples not approved will also be returned to the Contractor at its expense, if so requested.

Failure of any materials to pass the specified tests will be sufficient cause for refusal to consider, under this contract, any further samples of the same brand or make of that material. Government reserves the right to disapprove any material or equipment which previously has proved unsatisfactory in service.

Samples of various materials or equipment delivered on the site or in place may be taken by the Contracting Officer for testing. Samples failing to meet contract requirements will automatically void previous approvals. Contractor to replace such materials or equipment to meet contract requirements.

Approval of the Contractor's samples by the Contracting Officer does not relieve the Contractor of his responsibilities under the contract.

PART 2 PRODUCTS

Not Used.

PART 3 EXECUTION

Not Used.

-- End of Section --

SUBMITTAL REGISTER

CONTRACT NO.
IFC SUBMITTAL

TITLE AND LOCATION
CENTRAL HEATING PLANT CONVERSION P224

CONTRACTOR

ACTIVITY NO	TRANSMITTAL NO	SPEC SECT	DESCRIPTION ITEM SUBMITTED	PARAGRAPH #	CLASSIFICATION	GOVT OR A/E REVWR	CONTRACTOR: SCHEDULE DATES			CONTRACTOR ACTION			APPROVING AUTHORITY					
							SUBMIT	APPROVAL NEEDED BY	MATERIAL NEEDED BY	ACTION CODE	DATE OF ACTION	DATE FWD TO APPR AUTH/ DATE RCD FROM CONTR	DATE FWD TO OTHER REVIEWER	DATE RCD FROM OTH REVIEWER	ACTION CODE	DATE OF ACTION	MAILED TO CONTR/ DATE RCD FRM APPR AUTH	REMARKS
(a)	(b)	(c)	(d)	(e)	(f)		(g)	(h)	(i)	(j)	(k)	(l)	(m)	(n)	(o)	(p)	(q)	(r)
		01 11 00	SD-01 Preconstruction Submittals															
			Salvage Plan	1.8	G													
		01 14 00	SD-01 Preconstruction Submittals															
			List of Contact Personnel	1.3.1.1	G													
		01 20 00.00 20	SD-01 Preconstruction Submittals															
			Earned Value Report	1.3	G													
		01 30 00	SD-01 Preconstruction Submittals															
			View location map	1.2	G													
			Progress and completion pictures	1.3	G													
		01 32 17.00 20	SD-01 Preconstruction Submittals															
			Qualifications	1.5	G													
			Baseline Network Analysis	1.3	G													
			Schedule															
			SD-07 Certificates															
			Monthly Network Analysis	1.7.1	G													
			SD-11 Closeout Submittals															
			As-Built Schedule	1.7.2	G													
		01 33 00	SD-01 Preconstruction Submittals															
			Submittal register	1.9	G													
		01 35 26	SD-01 Preconstruction Submittals															
			Accident Prevention Plan (APP)	1.7	G													
			Activity Hazard Analysis (AHA)	1.8	G													
			Crane Critical Lift Plan	1.7.1	G													
			Crane Operators	1.6.1.3	G													
			Traffic Control Plan	1.17.1	G													
			Standard Hand Signals	1.17.2.1	G													

SUBMITTAL REGISTER

CONTRACT NO.
IFC SUBMITTAL

TITLE AND LOCATION
CENTRAL HEATING PLANT CONVERSION P224

CONTRACTOR

ACTIVITY NO	TRANSMITTAL NO	SPEC SECT	DESCRIPTION ITEM SUBMITTED	PARAGRAPH #	CLASSIFICATION	GOVT OR A/E REVWR	CONTRACTOR: SCHEDULE DATES			CONTRACTOR ACTION			APPROVING AUTHORITY				MAILED TO CONTR/	
							SUBMIT	APPROVAL NEEDED BY	MATERIAL NEEDED BY	ACTION CODE	DATE OF ACTION	DATE FWD TO APPR AUTH/ DATE RCD FROM CONTR	DATE FWD TO OTHER REVIEWER	DATE RCD FROM OTH REVIEWER	ACTION CODE	DATE OF ACTION	DATE RCD FRM APPR AUTH	REMARKS
(a)	(b)	(c)	(d)	(e)	(f)		(g)	(h)	(i)	(j)	(k)	(l)	(m)	(n)	(o)	(p)	(q)	(r)
		01 35 26	SD-06 Test Reports															
			Notifications and Reports	1.12														
			Accident Reports	1.12.2														
			Crane Reports	1.12.3														
			Arc Flash Risk/Hazard Analysis	3.8.2	G													
			SD-07 Certificates															
			Confined Space Entry Permit	1.9														
			Hot work permit	1.9														
			Arc Flash Risk/Hazard Analysis	3.8.3	G													
			Qualifications															
			Contractor Electrical Energized	3.8.4	G													
			Work Permit															
			Contractor Safety Self-Evaluation	1.4	G													
			Checklist															
			Certificate of Compliance	1.12.4														
		01 45 00.00 20	SD-01 Preconstruction Submittals															
			Construction Quality Control (QC)	1.6.1	G													
			Plan															
			Indoor Air Quality (IAQ)	1.18	G													
			Management Plan															
			Basis of Design and Design	1.10.1														
			Intent															
			SD-06 Test Reports															
			Acceptance Testing of Critical	1.4.1	G													
			Systems Checklist															
			SD-07 Certificates															

SUBMITTAL REGISTER

CONTRACT NO.
IFC SUBMITTAL

TITLE AND LOCATION
CENTRAL HEATING PLANT CONVERSION P224

CONTRACTOR

ACTIVITY NO	TRANSMITTAL NO	SPEC SECT	DESCRIPTION ITEM SUBMITTED	PARAGRAPH #	CLASSIFICATION	GOVT OR A/E REVWR	CONTRACTOR: SCHEDULE DATES			CONTRACTOR ACTION			APPROVING AUTHORITY					
							SUBMIT	APPROVAL NEEDED BY	MATERIAL NEEDED BY	ACTION CODE	DATE OF ACTION	DATE FWD TO APPR AUTH/ DATE RCD FROM CONTR	DATE FWD TO OTHER REVIEWER	DATE RCD FROM OTH REVIEWER	ACTION CODE	DATE OF ACTION	MAILED TO CONTR/ DATE RCD FRM APPR AUTH	REMARKS
(a)	(b)	(c)	(d)	(e)	(f)		(g)	(h)	(i)	(j)	(k)	(l)	(m)	(n)	(o)	(p)	(q)	(r)
		01 45 00.00 20	ICC IBC Special Inspections		G													
			Certification															
			CA Resume															
		01 50 00	SD-01 Preconstruction Submittals															
			Traffic Control Plan	3.4.1	G													
			Construction Site Plan	1.4	G													
			Temporary Boiler Site Plan	1.5	G													
			SD-03 Product Data															
			Temporary Boilers	2.2.1	G													
			Temporary Steam Piping	2.3.1	G													
			Temporary Wiring	2.3.6	G													
			SD-06 Test Reports															
			Temporary Boiler Test Results	2.2.1														
		01 57 19	SD-01 Preconstruction Submittals															
			Preconstruction Survey	1.25.1														
			Solid Waste Protection Plan		G													
			Regulatory Notifications	1.25.2	G													
			Environmental Protection Plan		G													
			Dirt and Dust Control Plan	1.26.9.1	G													
			Employee Training Records	1.25.5	G													
			Environmental Manager	1.25.4	G													
			Qualifications															
			SD-06 Test Reports															
			Laboratory Analysis	3.7.1.1.2														
			Inspection Reports	3.2.1.3														
			Solid Waste Management Report		G													

SUBMITTAL REGISTER

CONTRACT NO.
IFC SUBMITTAL

TITLE AND LOCATION
CENTRAL HEATING PLANT CONVERSION P224

CONTRACTOR

ACTIVITY NO	TRANSMITTAL NO	SPEC SECT	DESCRIPTION ITEM SUBMITTED	PARAGRAPH #	CLASSIFICATION	GOVT OR A/E REVWR	CONTRACTOR: SCHEDULE DATES			CONTRACTOR ACTION			APPROVING AUTHORITY				MAILED TO CONTR/ DATE RCD FRM APPR AUTH	REMARKS
							SUBMIT	APPROVAL NEEDED BY	MATERIAL NEEDED BY	ACTION CODE	DATE OF ACTION	DATE FWD TO APPR AUTH/ DATE RCD FROM CONTR	DATE FWD TO OTHER REVIEWER	DATE RCD FROM OTH REVIEWER	ACTION CODE	DATE OF ACTION		
(a)	(b)	(c)	(d)	(e)	(f)		(g)	(h)	(i)	(j)	(k)	(l)	(m)	(n)	(o)	(p)	(q)	(r)
		01 57 19	SD-07 Certificates															
			Employee Training Records	1.25.5	G													
			ECATTS Certificate Of		G													
			Completion															
			Erosion and Sediment Control	1.25.5														
			Inspector															
			SD-11 Closeout Submittals															
			Waste Determination	3.7.1	G													
			Documentation															
			Disposal Documentation for	3.7.3.6	G													
			Hazardous and Regulated Waste															
			Assembled Employee Training	1.25.5	G													
			Records															
			Solid Waste Management Permit	1.29	G													
			Solid Waste Management Report		G													
			Contractor Hazardous Material	3.8.1	G													
			Inventory Log															
			Hazardous Waste/Debris	3.7.3.1	G													
			Management															
			Regulatory Notifications	1.25.2	G													
			Sales Documentation	3.7.2.1	G													
			Contractor Certification	3.7.2.1														
			As-Built Topographic Survey	3.2.1.5														
		01 58 00	SD-02 Shop Drawings															
			Preliminary Drawing Indicating	1.3.1	G													
			Layout And Text Content															

SUBMITTAL REGISTER

CONTRACT NO.
IFC SUBMITTAL

TITLE AND LOCATION
CENTRAL HEATING PLANT CONVERSION P224

CONTRACTOR

ACTIVITY NO	TRANSMITTAL NO	SPEC SECT	DESCRIPTION ITEM SUBMITTED	PARAGRAPH #	CLASSIFICATION	GOVT OR A/E REVWR	CONTRACTOR: SCHEDULE DATES			CONTRACTOR ACTION			APPROVING AUTHORITY					
							SUBMIT	APPROVAL NEEDED BY	MATERIAL NEEDED BY	ACTION CODE	DATE OF ACTION	DATE FWD TO APPR AUTH/ DATE RCD FROM CONTR	DATE FWD TO OTHER REVIEWER	DATE RCD FROM OTH REVIEWER	ACTION CODE	DATE OF ACTION	MAILED TO CONTR/ DATE RCD FRM APPR AUTH	REMARKS
(a)	(b)	(c)	(d)	(e)	(f)		(g)	(h)	(i)	(j)	(k)	(l)	(m)	(n)	(o)	(p)	(q)	(r)
		01 60 00.00 22	SD-07 Certificates															
			Certificate of State Licensed	1.2.1	G													
			Applicator															
			SD-11 Closeout Submittals															
			Field Pesticide/Herbicide	3.2	G													
			Management Record Form															
		01 74 19	SD-01 Preconstruction Submittals															
			Waste Management Plan	1.5	G													
			SD-11 Closeout Submittals															
			Records	1.6	G													
		01 78 00	SD-03 Product Data															
			Warranty Management Plan	1.6.1														
			Warranty Tags	1.6.4														
			Final Cleaning	3.4														
			Spare Parts Data	1.5														
			SD-08 Manufacturer’s Instructions															
			Instructions	1.6.1														
			SD-10 Operation and Maintenance															
			Data															
			Operation and Maintenance	3.3	G													
			Manuals															
			SD-11 Closeout Submittals															
			As-Built Drawings	3.1	G													
			Record Drawings	3.2	G													
			As-Built Record of Equipment															
			and Materials															

SUBMITTAL REGISTER

CONTRACT NO.
IFC SUBMITTAL

TITLE AND LOCATION
CENTRAL HEATING PLANT CONVERSION P224

CONTRACTOR

ACTIVITY NO	TRANSMITTAL NO	SPEC SECT	DESCRIPTION ITEM SUBMITTED	PARAGRAPH #	CLASSIFICATION	GOVT OR A/E REVWR	CONTRACTOR: SCHEDULE DATES			CONTRACTOR ACTION			APPROVING AUTHORITY					
							SUBMIT	APPROVAL NEEDED BY	MATERIAL NEEDED BY	ACTION CODE	DATE OF ACTION	DATE FWD TO APPR AUTH/ DATE RCD FROM CONTR	DATE FWD TO OTHER REVIEWER	DATE RCD FROM OTH REVIEWER	ACTION CODE	DATE OF ACTION	MAILED TO CONTR/ DATE RCD FRM APPR AUTH	REMARKS
(a)	(b)	(c)	(d)	(e)	(f)		(g)	(h)	(i)	(j)	(k)	(l)	(m)	(n)	(o)	(p)	(q)	(r)
		01 78 00	Final Approved Shop Drawings															
			Construction Contract															
			Specifications															
			Certification of EPA Designated	2.1	G													
			Items															
			Interim DD FORM 1354		G													
			Checklist for DD FORM 1354		G													
			NAVFAC Sustainable & Energy	3.5	G													
			Data Record Card															
		01 78 24.00 20	SD-11 Closeout Submittals															
			eOMSI, Progress Submittal	1.4.1	G													
			eOMSI, Prefinal Submittal	1.4.2	G													
			eOMSI, Final Submittal	1.4.3	G													
		01 78 30.00 22	SD-11 Closeout Submittals															
			GIS Data Deliverables	1.3.7	G													
		02 41 00	SD-01 Preconstruction Submittals															
			Demolition Plan	1.2.1	G													
			Existing Conditions	1.9														
			SD-07 Certificates															
			Notification	1.6	G													
		02 82 16.00 20	SD-03 Product Data															
			Local Exhaust Equipment	3.1.4	G													
			Vacuums	3.1.5	G													
			Respirators	3.1.1.1	G													
			Pressure Differential Automatic	3.1.4	G													
			Recording Instrument															

SUBMITTAL REGISTER

CONTRACT NO.
IFC SUBMITTAL

TITLE AND LOCATION
CENTRAL HEATING PLANT CONVERSION P224

CONTRACTOR

ACTIVITY NO	TRANSMITTAL NO	SPEC SECT	DESCRIPTION ITEM SUBMITTED	PARAGRAPH #	CLASSIFICATION	GOVT OR A/E REVWR	CONTRACTOR: SCHEDULE DATES			CONTRACTOR ACTION			APPROVING AUTHORITY					
							SUBMIT	APPROVAL NEEDED BY	MATERIAL NEEDED BY	ACTION CODE	DATE OF ACTION	DATE FWD TO APPR AUTH/ DATE RCD FROM CONTR	DATE FWD TO OTHER REVIEWER	DATE RCD FROM OTH REVIEWER	ACTION CODE	DATE OF ACTION	MAILED TO CONTR/ DATE RCD FRM APPR AUTH	REMARKS
(a)	(b)	(c)	(d)	(e)	(f)		(g)	(h)	(i)	(j)	(k)	(l)	(m)	(n)	(o)	(p)	(q)	(r)
		02 82 16.00 20	Amended Water	1.2.2	G													
			Material Safety Data Sheets	1.3.8	G													
			(Msds) for all materials															
			Encapsulants	2.1	G													
			SD-06 Test Reports															
			Air Sampling Results	1.5.5	G													
			Pressure Differential Recordings	1.5.6	G													
			For Local Exhaust System															
			Asbestos Disposal Quantity	3.3.3.2	G													
			Report															
			Encapsulation Test Patches		G													
			Clearance Sampling	3.2.5.3	G													
			SD-07 Certificates															
			Asbestos Hazard Abatement Plan	1.3.9	G													
			Testing Laboratory	1.3.10	G													
			Private Qualified Person	1.5.1	G													
			Documentation															
			Contractor's License	1.5.4	G													
			Competent Person	1.5.2	G													
			Worker's License	1.5.3	G													
			Landfill Approval	1.3.11	G													
			Employee Training	1.3.3	G													
			Medical Certification	1.3.12	G													
			Waste Shipment Records	1.3.11	G													
			Respiratory Protection Program	1.3.6	G													
			Delivery Tickets	1.3.11	G													

SUBMITTAL REGISTER

CONTRACT NO.
IFC SUBMITTAL

TITLE AND LOCATION
CENTRAL HEATING PLANT CONVERSION P224

CONTRACTOR

ACTIVITY NO	TRANSMITTAL NO	SPEC SECT	DESCRIPTION ITEM SUBMITTED	PARAG # RAPH	CLASSIFICATION	GOVT OR A/E REVWR	CONTRACTOR: SCHEDULE DATES			CONTRACTOR ACTION			APPROVING AUTHORITY					
							SUBMIT	APPROVAL NEEDED BY	MATERIAL NEEDED BY	ACTION CODE	DATE OF ACTION	DATE FWD TO APPR AUTH/ DATE RCD FROM CONTR	DATE FWD TO OTHER REVIEWER	DATE RCD FROM OTH REVIEWER	ACTION CODE	DATE OF ACTION	MAILED TO CONTR/ DATE RCD FRM APPR AUTH	REMARKS
(a)	(b)	(c)	(d)	(e)	(f)		(g)	(h)	(i)	(j)	(k)	(l)	(m)	(n)	(o)	(p)	(q)	(r)
		02 82 16.00 20	Vacuums	3.1.5	G													
			Water Filtration Equipment	3.1.2.3	G													
			Ventilation Systems	3.1.5	G													
			Equipment Used To Contain	3.1	G													
			Airborne Asbestos Fibers															
			Encapsulants	2.1	G													
			Notifications	1.3.4														
			SD-11 Closeout Submittals															
			Notifications	1.3.4	G													
			Rental Equipment	1.6.1	G													
			Respirator Program Records	1.3.6.1	G													
			Permits and Licenses	1.3.4	G													
			Protective Clothing		G													
			Decontamination Quality Control															
			Records															
		02 82 33.13 20	SD-03 Product Data															
			Vacuum Filters	1.6.4	G													
			Respirators	1.6.1	G													
			SD-06 Test Reports															
			Sampling Results	1.5.2.3	G													
			Occupational and Environmental	1.5.2.3	G													
			Assessment Data Report															
			SD-07 Certificates															
			Qualifications of CP	1.5.1.1	G													
			Testing Laboratory	1.5.1.3	G													

SUBMITTAL REGISTER

CONTRACT NO.
IFC SUBMITTAL

TITLE AND LOCATION
CENTRAL HEATING PLANT CONVERSION P224

CONTRACTOR

ACTIVITY NO	TRANSMITTAL NO	SPEC SECT	DESCRIPTION ITEM SUBMITTED	PARAGRAPH #	CLASSIFICATION	GOVT OR A/E REVWR	CONTRACTOR: SCHEDULE DATES			CONTRACTOR ACTION			APPROVING AUTHORITY					
							SUBMIT	APPROVAL NEEDED BY	MATERIAL NEEDED BY	ACTION CODE	DATE OF ACTION	DATE FWD TO APPR AUTH/ DATE RCD FROM CONTR	DATE FWD TO OTHER REVIEWER	DATE RCD FROM OTH REVIEWER	ACTION CODE	DATE OF ACTION	MAILED TO CONTR/ DATE RCD FRM APPR AUTH	REMARKS
(a)	(b)	(c)	(d)	(e)	(f)		(g)	(h)	(i)	(j)	(k)	(l)	(m)	(n)	(o)	(p)	(q)	(r)
		02 82 33.13 20	lead-based paint/paint with lead	1.5.3	G													
			removal/control plan															
			Rental equipment notification	1.6.3	G													
			Respiratory Protection Program	1.5.2.6	G													
			Hazard Communication Program	1.5.2.7	G													
			State approved hazardous waste		G													
			treatment, storage, or disposal															
			facility															
			Lead Waste Management Plan	1.5.2.8	G													
			Vacuum filters	1.6.4	G													
			SD-11 Closeout Submittals															
			Hazardous Waste Manifest	3.5.2.1	G													
			Medical Examinations	1.5.2.4	G													
			Training Certification	1.5.1.2	G													
		03 30 00	SD-02 Shop Drawings															
			Concrete Infill Walls	1.6.2	G													
			SD-03 Product Data															
			Cementitious Materials	2.4.1	G													
			Reinforcement	2.5	G													
			Admixtures	2.4.5	G													
			SD-05 Design Data															
			Mix Design	2.3.1	G													
			SD-06 Test Reports															
			Concrete Mix Design	1.6.1.1	G													
			Compressive Strength Tests	3.12.2.3	G													
			Air Content	3.12.2.4														

SUBMITTAL REGISTER

CONTRACT NO.
IFC SUBMITTAL

TITLE AND LOCATION
CENTRAL HEATING PLANT CONVERSION P224

CONTRACTOR

ACTIVITY NO	TRANSMITTAL NO	SPEC SECT	DESCRIPTION ITEM SUBMITTED	PARAGRAPH #	CLASSIFICATION	GOVT OR A/E REVWR	CONTRACTOR: SCHEDULE DATES			CONTRACTOR ACTION			APPROVING AUTHORITY					
							SUBMIT	APPROVAL NEEDED BY	MATERIAL NEEDED BY	ACTION CODE	DATE OF ACTION	DATE FWD TO APPR AUTH/ DATE RCD FROM CONTR	DATE FWD TO OTHER REVIEWER	DATE RCD FROM OTH REVIEWER	ACTION CODE	DATE OF ACTION	MAILED TO CONTR/ DATE RCD FRM APPR AUTH	REMARKS
(a)	(b)	(c)	(d)	(e)	(f)		(g)	(h)	(i)	(j)	(k)	(l)	(m)	(n)	(o)	(p)	(q)	(r)
		03 30 00	Slump Tests	3.12.2.1														
			SD-07 Certificates															
			Reinforcing Bars	2.5.1														
			Material Safety Data Sheets	1.6.3.1														
			Field Testing Technician and	1.6.5														
			Testing Agency															
		04 20 00	SD-02 Shop Drawings															
			Brick Infill Wall	1.3.1.1	G													
			SD-03 Product Data															
			Hot Weather Procedures	1.5.1	G													
			Cold Weather Procedures	1.5.2	G													
			Clay or Shale Brick	2.2.2	G													
			Cement	2.2.3.1.1	G													
			Cementitious Materials	2.4.1.1	G													
			SD-04 Samples															
			Clay or Shale Brick	2.2.2	G													
			Concrete Masonry Units (CMU)	2.2.3.1	G													
			SD-05 Design Data															
			Masonry Compressive Strength	2.1.2	G													
			SD-06 Test Reports															
			Field Testing of Grout	3.6.1.1														
			SD-07 Certificates															
			Clay or Shale Brick	2.2.2														
			Admixtures for Masonry Mortar	2.4.1.3														
			Admixtures for Grout	2.4.2.2														

SUBMITTAL REGISTER

CONTRACT NO.
IFC SUBMITTAL

TITLE AND LOCATION
CENTRAL HEATING PLANT CONVERSION P224

CONTRACTOR

ACTIVITY NO	TRANSMITTAL NO	SPEC SECT	DESCRIPTION ITEM SUBMITTED	PARAG # RAPH	CLASSIFICATION	GOVT OR A/E REVWR	CONTRACTOR: SCHEDULE DATES			CONTRACTOR ACTION			APPROVING AUTHORITY					
							SUBMIT	APPROVAL NEEDED BY	MATERIAL NEEDED BY	ACTION CODE	DATE OF ACTION	DATE FWD TO APPR AUTH/ DATE RCD FROM CONTR	DATE FWD TO OTHER REVIEWER	DATE RCD FROM OTH REVIEWER	ACTION CODE	DATE OF ACTION	MAILED TO CONTR/ DATE RCD FRM APPR AUTH	REMARKS
(a)	(b)	(c)	(d)	(e)	(f)		(g)	(h)	(i)	(j)	(k)	(l)	(m)	(n)	(o)	(p)	(q)	(r)
		04 20 00	Anchors, Ties, and Bar	2.6.2														
			Positioners															
			Joint Reinforcement	2.6.3														
			SD-08 Manufacturer's Instructions															
			Admixtures for Masonry Mortar	2.4.1.3														
			Admixtures for Grout	2.4.2.2														
		05 12 00	SD-02 Shop Drawings															
			Fabrication drawings	1.4.2	G													
			Erection Drawings	1.4.1.1	G													
			SD-03 Product Data															
			Shop primer	2.6.2														
			Welding electrodes and rods	2.4.1														
			Direct Tension Indicator Washers	2.3.2.3														
			Non-Shrink Grout	2.4.2														
			Tension control bolts	2.3.3														
			SD-06 Test Reports															
			Bolts, nuts, and washers	2.3														
			Weld Inspection Reports	3.7.1.2														
			Direct Tension Indicator Washer	3.7.2.1														
			Inspection Reports															
			Bolt Testing Reports	3.7.3.1														
			SD-07 Certificates															
			Steel	2.2														
			Bolts, nuts, and washers	2.3														
			Galvanizing	2.5														

SUBMITTAL REGISTER

CONTRACT NO.
IFC SUBMITTAL

TITLE AND LOCATION
CENTRAL HEATING PLANT CONVERSION P224

CONTRACTOR

ACTIVITY NO	TRANSMITTAL NO	SPEC SECT	DESCRIPTION ITEM SUBMITTED	PARAGRAPH #	CLASSIFICATION	GOVT OR A/E REVWR	CONTRACTOR: SCHEDULE DATES			CONTRACTOR ACTION			APPROVING AUTHORITY					
							SUBMIT	APPROVAL NEEDED BY	MATERIAL NEEDED BY	ACTION CODE	DATE OF ACTION	DATE FWD TO APPR AUTH/ DATE RCD FROM CONTR	DATE FWD TO OTHER REVIEWER	DATE RCD FROM OTH REVIEWER	ACTION CODE	DATE OF ACTION	MAILED TO CONTR/ DATE RCD FRM APPR AUTH	REMARKS
(a)	(b)	(c)	(d)	(e)	(f)		(g)	(h)	(i)	(j)	(k)	(l)	(m)	(n)	(o)	(p)	(q)	(r)
		05 12 00	AISC Fabrication Plant Quality	1.3														
			Certification															
			Welding procedures and	1.4.3.1														
			qualifications															
			Welding electrodes and rods	2.4.1														
			AISC Erector Quality Certification	1.3														
		05 50 13	SD-02 Shop Drawings															
			Access doors and panels	2.3	G													
			Floor gratings and roof walkways	2.6	G													
			angles and plates	2.9	G													
			SD-03 Product Data															
			Cover plates and frames	2.5														
			Floor gratings and roof walkways	2.6	G													
			Blank Off Panels	2.7	G													
			Brake Metal	2.9	G													
		05 52 00	SD-02 Shop Drawings															
			Fabrication Drawings	1.2.1	G													
			Iron and Steel Hardware	3.2														
			Steel Shapes, Plates, Bars and	3.2														
			Strips															
			SD-03 Product Data															
			Structural Steel Plates, Shapes,	2.2.1	G													
			and Bars															
			Structural Steel Tubing	2.2.2	G													
			Cold-Finished Steel Bars	2.2.4	G													
			Hot-Rolled Carbon Steel Bars	2.2.3	G													

SUBMITTAL REGISTER

CONTRACT NO.
IFC SUBMITTAL

TITLE AND LOCATION
CENTRAL HEATING PLANT CONVERSION P224

CONTRACTOR

ACTIVITY NO	TRANSMITTAL NO	SPEC SECT	DESCRIPTION ITEM SUBMITTED	PARAGRAPH #	CLASSIFICATION	GOVT OR A/E REVWR	CONTRACTOR: SCHEDULE DATES			CONTRACTOR ACTION			APPROVING AUTHORITY				MAILED TO CONTR/	
							SUBMIT	APPROVAL NEEDED BY	MATERIAL NEEDED BY	ACTION CODE	DATE OF ACTION	DATE FWD TO APPR AUTH/ DATE RCD FROM CONTR	DATE FWD TO OTHER REVIEWER	DATE RCD FROM OTH REVIEWER	ACTION CODE	DATE OF ACTION	DATE RCD FRM APPR AUTH	REMARKS
(a)	(b)	(c)	(d)	(e)	(f)		(g)	(h)	(i)	(j)	(k)	(l)	(m)	(n)	(o)	(p)	(q)	(r)
		05 52 00	Cold-Drawn Steel Tubing	2.2.5	G													
			Concrete Inserts	2.2.7	G													
			Masonry Anchorage Devices	2.2.8	G													
			Protective Coating	2.1.2	G													
			Steel Railings and Handrails	2.2.10	G													
			Anchorage and Fastening	1.2.1	G													
			Systems															
			SD-07 Certificates															
			Welding Procedures	1.4.1														
			Welder Qualification	1.4.2														
			SD-08 Manufacturer's Instructions															
			Installation Instructions	3.2														
		07 41 13	SD-02 Shop Drawings															
			Roofing Panels	1.4.5	G													
			Flashing and Accessories	1.4.5	G													
			Gutter/Downspout Assembly	1.4.5	G													
			SD-03 Product Data															
			Roof Panels	2.1	G													
			Factory-Applied Color Finish	1.4.5	G													
			Accessories	2.4	G													
			Fasteners	1.4.5	G													
			Pressure Sensitive Tape	1.4.5	G													
			Coil Stock	1.4.5	G													
			SD-04 Samples															
			Roof Panels	2.1	G													
			Factory-applied Color Finish	1.4.5	G													

SUBMITTAL REGISTER

CONTRACT NO.
IFC SUBMITTAL

TITLE AND LOCATION
CENTRAL HEATING PLANT CONVERSION P224

CONTRACTOR

ACTIVITY NO	TRANSMITTAL NO	SPEC SECT	DESCRIPTION ITEM SUBMITTED	PARAGRAPH #	CLASSIFICATION	GOVT OR A/E REVWR	CONTRACTOR: SCHEDULE DATES			CONTRACTOR ACTION			APPROVING AUTHORITY					
							SUBMIT	APPROVAL NEEDED BY	MATERIAL NEEDED BY	ACTION CODE	DATE OF ACTION	DATE FWD TO APPR AUTH/ DATE RCD FROM CONTR	DATE FWD TO OTHER REVIEWER	DATE RCD FROM OTH REVIEWER	ACTION CODE	DATE OF ACTION	MAILED TO CONTR/ DATE RCD FRM APPR AUTH	REMARKS
(a)	(b)	(c)	(d)	(e)	(f)		(g)	(h)	(i)	(j)	(k)	(l)	(m)	(n)	(o)	(p)	(q)	(r)
		07 41 13	Accessories	2.4														
			Fasteners	1.4.5														
			Gaskets and Sealant/Insulating	1.4.5														
			Compounds															
			SD-05 Design Data															
			Wind Uplift Resistance	1.2.1.2	G													
			SD-06 Test Reports															
			Leakage Test Report	1.2.1.1	G													
			Wind Uplift Test Report	1.2.1.2	G													
			Factory Finish and Color	2.2	G													
			Performance Requirements															
			SD-07 Certificates															
			Roof Panels	2.1	G													
			Coil Stock Compatibility	1.4.5	G													
			Qualification of Manufacturer	1.4.1	G													
			Qualification of Applicator	1.4.2	G													
			SD-11 Closeout Submittals															
			Warranties	1.8	G													
		07 84 00	SD-02 Shop Drawings															
			Firestopping System	2.1	G													
			SD-03 Product Data															
			Firestopping Materials	2.2	G													
			SD-06 Test Reports															
			Inspection	3.3	G													
			SD-07 Certificates															
			Inspector Qualifications	1.5.2														

SUBMITTAL REGISTER

CONTRACT NO.
IFC SUBMITTAL

TITLE AND LOCATION
CENTRAL HEATING PLANT CONVERSION P224

CONTRACTOR

ACTIVITY NO	TRANSMITTAL NO	SPEC SECT	DESCRIPTION ITEM SUBMITTED	PARAGRAPH #	CLASSIFICATION	GOVT OR A/E REVWR	CONTRACTOR: SCHEDULE DATES			CONTRACTOR ACTION			APPROVING AUTHORITY					
							SUBMIT	APPROVAL NEEDED BY	MATERIAL NEEDED BY	ACTION CODE	DATE OF ACTION	DATE FWD TO APPR AUTH/ DATE RCD FROM CONTR	DATE FWD TO OTHER REVIEWER	DATE RCD FROM OTH REVIEWER	ACTION CODE	DATE OF ACTION	MAILED TO CONTR/ DATE RCD FRM APPR AUTH	REMARKS
(a)	(b)	(c)	(d)	(e)	(f)		(g)	(h)	(i)	(j)	(k)	(l)	(m)	(n)	(o)	(p)	(q)	(r)
		07 84 00	Firestopping Materials	2.2														
			Installer Qualifications	1.5.1	G													
		07 92 00	SD-03 Product Data															
			Sealants	2.1	G													
			Primers	2.2	G													
			Bond Breakers	2.3	G													
			Backstops	2.4	G													
			SD-06 Test Reports															
			Field Adhesion Test Report	3.1														
			SD-07 Certificates															
			Sealants	2.1	G													
		09 90 00	SD-02 Shop Drawings															
			Piping identification	3.10														
			stencil	3.10														
			SD-03 Product Data															
			Materials	2.1														
			Coating		G													
			Manufacturer's Technical Data	2.1														
			Sheets															
			Sealant	3.2.5														
			SD-07 Certificates															
			Applicator's Qualifications	1.3														
			Manufacturer's Material Safety	1.6.2														
			Data Sheets															
		23 07 00	SD-02 Shop Drawings															
			MICA Plates	3.2.2.4	G													

SUBMITTAL REGISTER

CONTRACT NO.
IFC SUBMITTAL

TITLE AND LOCATION
CENTRAL HEATING PLANT CONVERSION P224

CONTRACTOR

ACTIVITY NO	TRANSMITTAL NO	SPEC SECT	DESCRIPTION ITEM SUBMITTED	PARAGRAPH #	CLASSIFICATION	GOVT OR A/E REVWR	CONTRACTOR: SCHEDULE DATES			CONTRACTOR ACTION			APPROVING AUTHORITY					
							SUBMIT	APPROVAL NEEDED BY	MATERIAL NEEDED BY	ACTION CODE	DATE OF ACTION	DATE FWD TO APPR AUTH/ DATE RCD FROM CONTR	DATE FWD TO OTHER REVIEWER	DATE RCD FROM OTH REVIEWER	ACTION CODE	DATE OF ACTION	MAILED TO CONTR/ DATE RCD FRM APPR AUTH	REMARKS
(a)	(b)	(c)	(d)	(e)	(f)		(g)	(h)	(i)	(j)	(k)	(l)	(m)	(n)	(o)	(p)	(q)	(r)
		23 07 00	Pipe Insulation Systems	2.3														
			Pipe Insulation Systems	3.2														
			Duct Insulation Systems	3.3														
			Equipment Insulation Systems	3.4														
			SD-03 Product Data															
			Pipe Insulation Systems	2.3	G													
			Pipe Insulation Systems	3.2	G													
			Duct Insulation Systems	3.3	G													
			Equipment Insulation Systems	3.4	G													
			SD-08 Manufacturer's Instructions															
			Pipe Insulation Systems	2.3	G													
			Pipe Insulation Systems	3.2	G													
			Duct Insulation Systems	3.3	G													
			Equipment Insulation Systems	3.4	G													
		23 09 13	SD-03 Product Data															
			Equipment	2.1	G													
			Weathershields	2.2	G													
			Tubing	2.3	G													
			Wire And Cable	2.4	G													
			Sensors And Instrumentation	2.5	G													
			Indicating Devices	2.6	G													
			Output Devices	2.7	G													
			User Input Devices	2.8	G													
			SD-07 Certificates															
			Equipment	2.1	G													
			Sensors And Instrumentation	2.5	G													

SUBMITTAL REGISTER

CONTRACT NO.
IFC SUBMITTAL

TITLE AND LOCATION
CENTRAL HEATING PLANT CONVERSION P224

CONTRACTOR

ACTIVITY NO	TRANSMITTAL NO	SPEC SECT	DESCRIPTION ITEM SUBMITTED	PARAGRAPH #	CLASSIFICATION	GOVT OR A/E REVWR	CONTRACTOR: SCHEDULE DATES			CONTRACTOR ACTION			APPROVING AUTHORITY					
							SUBMIT	APPROVAL NEEDED BY	MATERIAL NEEDED BY	ACTION CODE	DATE OF ACTION	DATE FWD TO APPR AUTH/ DATE RCD FROM CONTR	DATE FWD TO OTHER REVIEWER	DATE RCD FROM OTH REVIEWER	ACTION CODE	DATE OF ACTION	MAILED TO CONTR/ DATE RCD FRM APPR AUTH	REMARKS
(a)	(b)	(c)	(d)	(e)	(f)		(g)	(h)	(i)	(j)	(k)	(l)	(m)	(n)	(o)	(p)	(q)	(r)
		23 09 13	Indicating Devices	2.6	G													
			Output Devices	2.7	G													
			User Input Devices	2.8	G													
		23 09 93.13	SD-02 Shop Drawings															
			P&ID Drawings	2.1.1	G													
			Loop Sheet Diagrams	2.1.1	G													
		23 31 13.00 40	SD-01 Preconstruction Submittals															
			Material, Equipment, and Fixture	Part 2	G													
			Lists															
			Records of Existing Conditions	2.1.1	G													
			SD-02 Shop Drawings															
			Connection Diagrams	2.1	G													
			Record Drawings	1.3	G													
			Offset Fitting Configurations	2.3.1	G													
			Offset Fitting Configurations	2.3.3	G													
			SD-03 Product Data															
			Equipment and Performance	2.1.1	G													
			Data															
			Galvanized Steel Ductwork	2.2.1	G													
			Materials															
			Brazing Materials	2.2.2	G													
			Mill-Rolled Reinforcing and	2.2.3	G													
			Supporting Materials															
			Round Sheet Metal Duct Fittings	2.3.1	G													
			Turning Vanes	2.3.4	G													
			Flexible Connectors	2.3.5	G													

SUBMITTAL REGISTER

CONTRACT NO.
IFC SUBMITTAL

TITLE AND LOCATION
CENTRAL HEATING PLANT CONVERSION P224

CONTRACTOR

ACTIVITY NO	TRANSMITTAL NO	SPEC SECT	DESCRIPTION ITEM SUBMITTED	PARAGRAPH #	CLASSIFICATION	GOVT OR A/E REVWR	CONTRACTOR: SCHEDULE DATES			CONTRACTOR ACTION			APPROVING AUTHORITY					
							SUBMIT	APPROVAL NEEDED BY	MATERIAL NEEDED BY	ACTION CODE	DATE OF ACTION	DATE FWD TO APPR AUTH/ DATE RCD FROM CONTR	DATE FWD TO OTHER REVIEWER	DATE RCD FROM OTH REVIEWER	ACTION CODE	DATE OF ACTION	MAILED TO CONTR/ DATE RCD FRM APPR AUTH	REMARKS
(a)	(b)	(c)	(d)	(e)	(f)		(g)	(h)	(i)	(j)	(k)	(l)	(m)	(n)	(o)	(p)	(q)	(r)
		23 31 13.00 40	SD-05 Design Data															
			Design Analysis and Calculations	2.1	G													
			Design Analysis and Calculations	2.1.1	G													
			SD-06 Test Reports															
			Ductwork Leakage Tests	3.4.1	G													
			SD-07 Certificates															
			Listing of Product Installations	3.2	G													
			Galvanized Steel Ductwork	2.2.1	G													
			Materials															
			Brazing Materials	2.2.2	G													
			Mill-Rolled Reinforcing and	2.2.3	G													
			Supporting Materials															
			Round Sheet Metal Duct Fittings	2.3.1	G													
			Turning Vanes	2.3.4	G													
			Flexible Connectors	2.3.5	G													
		23 52 33.03 20	SD-02 Shop Drawings															
			Boiler	1.2.2.1	G													
			Boiler	1.2.5.1	G													
			Boiler Room Auxiliary Equipment	1.2.2.2	G													
			Burners	1.2.2.3	G													
			Burner Valve Racks	1.2.2.3	G													
			Dampers, Stacks, Ductwork, and	1.2.2.4	G													
			Breechings															
			Fuel Oil Equipment	1.2.2.5	G													
			Piping and Specialty Items	1.2.2.6	G													
			Reproducible Drawings	1.2.2.7	G													

SUBMITTAL REGISTER

CONTRACT NO.
IFC SUBMITTAL

TITLE AND LOCATION
CENTRAL HEATING PLANT CONVERSION P224

CONTRACTOR

ACTIVITY NO	TRANSMITTAL NO	SPEC SECT	DESCRIPTION ITEM SUBMITTED	PARAGRAPH #	CLASSIFICATION	GOVT OR A/E REVWR	CONTRACTOR: SCHEDULE DATES			CONTRACTOR ACTION			APPROVING AUTHORITY					
							SUBMIT	APPROVAL NEEDED BY	MATERIAL NEEDED BY	ACTION CODE	DATE OF ACTION	DATE FWD TO APPR AUTH/ DATE RCD FROM CONTR	DATE FWD TO OTHER REVIEWER	DATE RCD FROM OTH REVIEWER	ACTION CODE	DATE OF ACTION	MAILED TO CONTR/ DATE RCD FRM APPR AUTH	REMARKS
(a)	(b)	(c)	(d)	(e)	(f)		(g)	(h)	(i)	(j)	(k)	(l)	(m)	(n)	(o)	(p)	(q)	(r)
		23 52 33.03 20	SD-03 Product Data															
			Insulation Types and Installation	2.9.12	G													
			Procedures															
			SD-05 Design Data															
			Engineering Calculations	1.2.3.1	G													
			SD-06 Test Reports															
			Boiler Predicted Performance	1.2.4	G													
			Economizer Performance	1.2.4	G													
			Variable Speed Motor Controller	2.13.1.1	G													
			Hydrostatic and Leak Tightness	3.2.1.2	G													
			Tests															
			Preliminary Operation	3.2.2	G													
			General Startup Requirements	3.2.3	G													
			Boilers and Auxiliaries Tests and	3.2.5	G													
			Inspections															
			SD-07 Certificates															
			Compatibility of Boiler	1.4.5.1	G													
			Components and Equipment															
			System and Equipment	1.4.5.2	G													
			Installation															
			Identical Equipment	2.2.1	G													
			SD-10 Operation and Maintenance															
			Data															
			Boiler	1.2.2.1	G													
			Boiler	1.2.5.1	G													
			SD-11 Closeout Submittals															

SUBMITTAL REGISTER

CONTRACT NO.
IFC SUBMITTAL

TITLE AND LOCATION
CENTRAL HEATING PLANT CONVERSION P224

CONTRACTOR

ACTIVITY NO	TRANSMITTAL NO	SPEC SECT	DESCRIPTION ITEM SUBMITTED	PARAGRAPH #	CLASSIFICATION	GOVT OR A/E REVWR	CONTRACTOR: SCHEDULE DATES			CONTRACTOR ACTION			APPROVING AUTHORITY					
							SUBMIT	APPROVAL NEEDED BY	MATERIAL NEEDED BY	ACTION CODE	DATE OF ACTION	DATE FWD TO APPR AUTH/ DATE RCD FROM CONTR	DATE FWD TO OTHER REVIEWER	DATE RCD FROM OTH REVIEWER	ACTION CODE	DATE OF ACTION	MAILED TO CONTR/ DATE RCD FRM APPR AUTH	REMARKS
(a)	(b)	(c)	(d)	(e)	(f)		(g)	(h)	(i)	(j)	(k)	(l)	(m)	(n)	(o)	(p)	(q)	(r)
		23 52 33.03 20	Energy Efficient Equipment for	2.1.1	G													
			Boilers															
			Contractor Drawing Markups	3.3	G													
		26 20 00	SD-02 Shop Drawings															
			Wireways	2.25	G													
			SD-03 Product Data															
			Receptacles	2.10	G													
			Circuit breakers	2.11.2	G													
			Switches	2.8	G													
			Enclosed circuit breakers	2.12	G													
			Motor controllers	2.15	G													
			Combination motor controllers		G													
			Manual motor starters	2.16	G													
			SD-06 Test Reports															
			600-volt wiring test	3.5.2														
			Grounding system test															
			Ground-fault receptacle test	3.5.3														
			SD-07 Certificates															
			Fuses	2.9														
		26 24 13	SD-02 Shop Drawings															
			Switchboard Drawings	1.4.2	G													
			SD-03 Product Data															
			Protective Device	2.2.1	G													
			SD-06 Test Reports															
			Acceptance Checks and Tests	3.4.1														
		26 29 23	SD-02 Shop Drawings															

SUBMITTAL REGISTER

CONTRACT NO.
IFC SUBMITTAL

TITLE AND LOCATION
CENTRAL HEATING PLANT CONVERSION P224

CONTRACTOR

ACTIVITY NO	TRANSMITTAL NO	SPEC SECT	DESCRIPTION ITEM SUBMITTED	PARAGRAPH #	CLASSIFICATION	GOVT OR A/E REVWR	CONTRACTOR: SCHEDULE DATES			CONTRACTOR ACTION			APPROVING AUTHORITY				MAILED TO CONTR/ DATE RCD FRM APPR AUTH	REMARKS
							SUBMIT	APPROVAL NEEDED BY	MATERIAL NEEDED BY	ACTION CODE	DATE OF ACTION	DATE FWD TO APPR AUTH/ DATE RCD FROM CONTR	DATE FWD TO OTHER REVIEWER	DATE RCD FROM OTH REVIEWER	ACTION CODE	DATE OF ACTION		
(a)	(b)	(c)	(d)	(e)	(f)		(g)	(h)	(i)	(j)	(k)	(l)	(m)	(n)	(o)	(p)	(q)	(r)
		26 29 23	Schematic diagrams	1.5.1	G													
			Interconnecting diagrams	1.5.2	G													
			Installation drawings	1.5.3	G													
			SD-03 Product Data															
			Variable frequency drives	2.1	G													
			Wires and cables	2.3														
			Equipment schedule	1.5.4														
			SD-06 Test Reports															
			VFD Test	3.2.1														
			Performance Verification Tests	3.2.2														
			Endurance Test	3.2.3														
			SD-08 Manufacturer’s Instructions															
			Installation instructions	1.5.5														
			SD-09 Manufacturer’s Field															
			Reports															
			VFD Factory Test Plan	2.5.1	G													
			Factory test results	1.5.6														
			SD-10 Operation and Maintenance															
			Data															
			Variable frequency drives	2.1														
		26 56 00	SD-01 Preconstruction Submittals															
			Photometric Plan	1.4.2	G													
			LED Luminaire Warranty	1.6.1	G													
			SD-02 Shop Drawings															
			Luminaire drawings	1.4.1.1	G													
			Poles	1.4.1.2	G													

SUBMITTAL REGISTER

CONTRACT NO.
IFC SUBMITTAL

TITLE AND LOCATION
CENTRAL HEATING PLANT CONVERSION P224

CONTRACTOR

ACTIVITY NO	TRANSMITTAL NO	SPEC SECT	DESCRIPTION ITEM SUBMITTED	PARAGRAPH #	CLASSIFICATION	GOVT OR A/E REVWR	CONTRACTOR: SCHEDULE DATES			CONTRACTOR ACTION			APPROVING AUTHORITY					
							SUBMIT	APPROVAL NEEDED BY	MATERIAL NEEDED BY	ACTION CODE	DATE OF ACTION	DATE FWD TO APPR AUTH/ DATE RCD FROM CONTR	DATE FWD TO OTHER REVIEWER	DATE RCD FROM OTH REVIEWER	ACTION CODE	DATE OF ACTION	MAILED TO CONTR/ DATE RCD FRM APPR AUTH	REMARKS
(a)	(b)	(c)	(d)	(e)	(f)		(g)	(h)	(i)	(j)	(k)	(l)	(m)	(n)	(o)	(p)	(q)	(r)
		26 56 00	SD-03 Product Data															
			LED Luminaires	2.2	G													
			Luminaire Light Sources	2.2.2	G													
			Luminaire Power Supply Units	2.2.3	G													
			(Drivers)															
			Motion Sensor	2.3.2	G													
			Photocell	2.3.1	G													
			Aluminum poles	2.4.1	G													
			Brackets	2.5														
			SD-05 Design Data															
			Design Data for luminaires	1.4.3	G													
			Operating test	3.2														
			SD-07 Certificates															
			Luminaire Useful Life Certificate	1.6.1														
			SD-10 Operation and Maintenance															
			Data															
			LED Luminaire Warranty	1.6.1														
		27 21 01.00 20	SD-02 Shop Drawings															
			Video Intercommunication		G													
			System															
			Component Enclosure		G													
			Pedestal		G													
			SD-03 Product Data															
			video intercommunications	1.3.1	G													
			system															
			Cables and raceways	2.2														

SUBMITTAL REGISTER

CONTRACT NO.
IFC SUBMITTAL

TITLE AND LOCATION
CENTRAL HEATING PLANT CONVERSION P224

CONTRACTOR

ACTIVITY NO	TRANSMITTAL NO	SPEC SECT	DESCRIPTION ITEM SUBMITTED	PARAGRAPH #	CLASSIFICATION	GOVT OR A/E REVWR	CONTRACTOR: SCHEDULE DATES			CONTRACTOR ACTION			APPROVING AUTHORITY					
							SUBMIT	APPROVAL NEEDED BY	MATERIAL NEEDED BY	ACTION CODE	DATE OF ACTION	DATE FWD TO APPR AUTH/ DATE RCD FROM CONTR	DATE FWD TO OTHER REVIEWER	DATE RCD FROM OTH REVIEWER	ACTION CODE	DATE OF ACTION	MAILED TO CONTR/ DATE RCD FRM APPR AUTH	REMARKS
(a)	(b)	(c)	(d)	(e)	(f)		(g)	(h)	(i)	(j)	(k)	(l)	(m)	(n)	(o)	(p)	(q)	(r)
		27 21 01.00 20	Surge protection	2.3														
			Component Enclosure		G													
			Pedestal		G													
			SD-10 Operation and Maintenance															
			Data															
			Video Intercommunication															
			System															
		28 31 76.00 22	SD-01 Preconstruction Submittals															
			Qualifications for Fire Alarm	1.5.1.1	G													
			System Subcontractor															
			On Staff Fire Alarm System	1.5.1.1.1	G													
			Designer(s)															
			Supervising Fire Alarm	1.5.1.1.2	G													
			Technician															
			Installing Technicians	1.5.1.1.3	G													
			Testing Personnel	1.5.1.1.4	G													
			SD-02 Shop Drawings															
			Wiring Diagrams	3.1.1	G													
			System Layout	1.3.1	G													
			System Operation	2.10	G													
			As-Built Drawings	3.5.2	G													
			SD-03 Product Data															
			Technical Data And Computer	1.3.2	G													
			Software															
			Wiring	2.3	G													
			Surge protection		G													

SUBMITTAL REGISTER

CONTRACT NO.
IFC SUBMITTAL

TITLE AND LOCATION
CENTRAL HEATING PLANT CONVERSION P224

CONTRACTOR

ACTIVITY NO	TRANSMITTAL NO	SPEC SECT	DESCRIPTION ITEM SUBMITTED	PARAGRAPH #	CLASSIFICATION	GOVT OR A/E REVWR	CONTRACTOR: SCHEDULE DATES			CONTRACTOR ACTION			APPROVING AUTHORITY					
							SUBMIT	APPROVAL NEEDED BY	MATERIAL NEEDED BY	ACTION CODE	DATE OF ACTION	DATE FWD TO APPR AUTH/ DATE RCD FROM CONTR	DATE FWD TO OTHER REVIEWER	DATE RCD FROM OTH REVIEWER	ACTION CODE	DATE OF ACTION	MAILED TO CONTR/ DATE RCD FRM APPR AUTH	REMARKS
(a)	(b)	(c)	(d)	(e)	(f)		(g)	(h)	(i)	(j)	(k)	(l)	(m)	(n)	(o)	(p)	(q)	(r)
		28 31 76.00 22	Ceiling bridges	2.4	G													
			Back boxes and conduit	2.5	G													
			Terminal cabinets	3.1.2	G													
			Addressable monitor module	2.6	G													
			Addressable control/relay module	2.7	G													
			Isolation module	2.8	G													
			Multi Criteria Fire/Carbon		G													
			monoxide detector															
			Manufacturer's installation and	1.7	G													
			maintenance manuals															
			SD-05 Design Data															
			System Operation	2.10	G													
			Battery power		G													
			SD-06 Test Reports															
			Field Quality Control	3.5	G													
			Testing Procedures	3.5.1	G													
			Carbon monoxide detector testing	2.9.1	G													
			SD-09 Manufacturer’s Field															
			Reports															
			Combination emergency		G													
			communications system panel															
			SD-10 Operation and Maintenance															
			Data															
			Operation and Maintenance	1.7	G													
			(O&M) Instructions															

SUBMITTAL REGISTER

CONTRACT NO.
IFC SUBMITTAL

TITLE AND LOCATION
CENTRAL HEATING PLANT CONVERSION P224

CONTRACTOR

ACTIVITY NO	TRANSMITTAL NO	SPEC SECT	DESCRIPTION ITEM SUBMITTED	PARAGRAPH #	CLASSIFICATION	GOVT OR A/E REVWR	CONTRACTOR: SCHEDULE DATES			CONTRACTOR ACTION			APPROVING AUTHORITY					
							SUBMIT	APPROVAL NEEDED BY	MATERIAL NEEDED BY	ACTION CODE	DATE OF ACTION	DATE FWD TO APPR AUTH/ DATE RCD FROM CONTR	DATE FWD TO OTHER REVIEWER	DATE RCD FROM OTH REVIEWER	ACTION CODE	DATE OF ACTION	MAILED TO CONTR/ DATE RCD FRM APPR AUTH	REMARKS
(a)	(b)	(c)	(d)	(e)	(f)		(g)	(h)	(i)	(j)	(k)	(l)	(m)	(n)	(o)	(p)	(q)	(r)
		28 31 76.00 22	Instruction of Government	3.6	G													
			Employees															
		31 32 11	SD-03 Product Data															
			Geotextile Fabrics	2.3	G													
			SD-06 Test Reports															
			Geotextile Fabrics	2.3														
			SD-07 Certificates															
			Geotextile Fabrics	2.3														
		32 16 13	SD-03 Product Data															
			Concrete	2.1	G													
			SD-06 Test Reports															
			Field Quality Control	3.5	G													
		32 17 23.00 20	SD-03 Product Data															
			Paints for roads and streets	2.1.1	G													
		32 31 13.53	SD-02 Shop Drawings															
			Fence Installation	1.3.2	G													
			Fence Installation	3.1	G													
			Installation Drawings	1.3.2	G													
			Location of gate, corner, end, and	1.3.2	G													
			pull posts															
			Gate Assembly	1.3.2	G													
			Gate Assembly	2.7.1	G													
			Gate Hardware and Accessories	1.3.2	G													
			Gate Hardware and Accessories	2.7.3	G													
			SD-03 Product Data															
			Fence Installation	1.3.2	G													

SUBMITTAL REGISTER

CONTRACT NO.
IFC SUBMITTAL

TITLE AND LOCATION
CENTRAL HEATING PLANT CONVERSION P224

CONTRACTOR

ACTIVITY NO	TRANSMITTAL NO	SPEC SECT	DESCRIPTION ITEM SUBMITTED	PARAGRAPH #	CLASSIFICATION	GOVT OR A/E REVWR	CONTRACTOR: SCHEDULE DATES			CONTRACTOR ACTION			APPROVING AUTHORITY					
							SUBMIT	APPROVAL NEEDED BY	MATERIAL NEEDED BY	ACTION CODE	DATE OF ACTION	DATE FWD TO APPR AUTH/ DATE RCD FROM CONTR	DATE FWD TO OTHER REVIEWER	DATE RCD FROM OTH REVIEWER	ACTION CODE	DATE OF ACTION	MAILED TO CONTR/ DATE RCD FRM APPR AUTH	REMARKS
(a)	(b)	(c)	(d)	(e)	(f)		(g)	(h)	(i)	(j)	(k)	(l)	(m)	(n)	(o)	(p)	(q)	(r)
		32 31 13.53	Fence Installation	3.1	G													
			Gate Assembly	1.3.2	G													
			Gate Assembly	2.7.1	G													
			Gate Hardware and Accessories	1.3.2	G													
			Gate Hardware and Accessories	2.7.3	G													
			SD-04 Samples															
			Sleeves															
			Barbed Tape	2.5														
			Wire Ties	2.4.1														
			SD-07 Certificates															
			Chain Link Fence	2.2.1														
			Reports	1.3.1														
			Reports	1.3.1														
			Zinc Coating	1.3.1														
			aluminum alloy coating	1.3.1														
			Fabric	2.1.1														
			Barbed Wire	2.4.2														
			Stretcher Bars	2.1.1														
			Gate Hardware and Accessories	1.3.2														
			Gate Hardware and Accessories	2.7.3														
			Concrete	2.6														
			Gate Operator	2.8														
			SD-08 Manufacturer’s Instructions															
			Fence Installation	1.3.2														
			Fence Installation	3.1														
			Gate Assembly	1.3.2														

SUBMITTAL REGISTER

CONTRACT NO.
IFC SUBMITTAL

TITLE AND LOCATION
CENTRAL HEATING PLANT CONVERSION P224

CONTRACTOR

ACTIVITY NO	TRANSMITTAL NO	SPEC SECT	DESCRIPTION ITEM SUBMITTED	PARAGRAPH #	CLASSIFICATION	GOVT OR A/E REVWR	CONTRACTOR: SCHEDULE DATES			CONTRACTOR ACTION			APPROVING AUTHORITY					
							SUBMIT	APPROVAL NEEDED BY	MATERIAL NEEDED BY	ACTION CODE	DATE OF ACTION	DATE FWD TO APPR AUTH/ DATE RCD FROM CONTR	DATE FWD TO OTHER REVIEWER	DATE RCD FROM OTH REVIEWER	ACTION CODE	DATE OF ACTION	MAILED TO CONTR/ DATE RCD FRM APPR AUTH	REMARKS
(a)	(b)	(c)	(d)	(e)	(f)		(g)	(h)	(i)	(j)	(k)	(l)	(m)	(n)	(o)	(p)	(q)	(r)
		32 31 13.53	Gate Assembly	2.7.1														
			Hardware Assembly	3.6														
			Accessories	1.3.1														
			SD-10 Operation and Maintenance															
			Data															
			Electro-Mechanical Locks	2.9														
			Gate Operator	2.8														
			operating and maintenance	3.6														
			instructions															
		32 92 23	SD-03 Product Data															
			Fertilizer	2.4														
			SD-06 Test Reports															
			Topsoil composition tests	2.2.2	G													
			SD-07 Certificates															
			sods	2.1	G													
		33 40 00	SD-07 Certificates															
			Pipeline Testing	3.8														
			Determination of Density	3.7.5														
			Frame and Cover for Gratings	2.3.5														
		33 51 15	SD-02 Shop Drawings															
			Pipe, Fittings, and Associated	2.1	G													
			Materials															
			Gas Line Profile Drawings	1.4.2.3														
			SD-03 Product Data															
			Materials and Equipment	2.1	G													
			Spare Parts	1.6	G													

SUBMITTAL REGISTER

CONTRACT NO.
IFC SUBMITTAL

TITLE AND LOCATION
CENTRAL HEATING PLANT CONVERSION P224

CONTRACTOR

ACTIVITY NO	TRANSMITTAL NO	SPEC SECT	DESCRIPTION ITEM SUBMITTED	PARAGRAPH #	CLASSIFICATION	GOVT OR A/E REVWR	CONTRACTOR: SCHEDULE DATES			CONTRACTOR ACTION			APPROVING AUTHORITY					
							SUBMIT	APPROVAL NEEDED BY	MATERIAL NEEDED BY	ACTION CODE	DATE OF ACTION	DATE FWD TO APPR AUTH/ DATE RCD FROM CONTR	DATE FWD TO OTHER REVIEWER	DATE RCD FROM OTH REVIEWER	ACTION CODE	DATE OF ACTION	MAILED TO CONTR/ DATE RCD FRM APPR AUTH	REMARKS
(a)	(b)	(c)	(d)	(e)	(f)		(g)	(h)	(i)	(j)	(k)	(l)	(m)	(n)	(o)	(p)	(q)	(r)
		33 51 15	Pipe and Accessory Coatings	2.1	G													
			SD-05 Design Data															
			Connections to Existing Lines	3.10	G													
			SD-06 Test Reports															
			Pressure and Leak Tests	3.12.1														
			Test Pit Investigation Report	3.12.2														
			SD-07 Certificates															
			Welder's training, qualifications	1.4.1.1														
			and procedures															
			Utility Work	3.10.1														
			SD-10 Operation and Maintenance															
			Data															
			Gas Distribution System and	3.13.1	G													
			Equipment Operation															
			Gas Distribution Equipment	3.13.2	G													
			Maintenance															
		33 71 02	SD-03 Product Data															
			Composite/fiberglass handholes	2.8.1	G													
		40 17 26.00 20	SD-02 Shop Drawings															
			Welding pressure piping	1.5.1														
			SD-07 Certificates															
			Welding procedures qualification	1.5.3														
			Nondestructive examination	1.5.2														
			(NDE) procedures															
			NDE personnel certification	1.5.6.2														
			procedures															

SUBMITTAL REGISTER

CONTRACT NO.
IFC SUBMITTAL

TITLE AND LOCATION
CENTRAL HEATING PLANT CONVERSION P224

CONTRACTOR

ACTIVITY NO	TRANSMITTAL NO	SPEC SECT	DESCRIPTION ITEM SUBMITTED	PARAGRAPH #	CLASSIFICATION	GOVT OR A/E REVWR	CONTRACTOR: SCHEDULE DATES			CONTRACTOR ACTION			APPROVING AUTHORITY				MAILED TO CONTR/ DATE RCD FRM APPR AUTH	REMARKS
							SUBMIT	APPROVAL NEEDED BY	MATERIAL NEEDED BY	ACTION CODE	DATE OF ACTION	DATE FWD TO APPR AUTH/ DATE RCD FROM CONTR	DATE FWD TO OTHER REVIEWER	DATE RCD FROM OTH REVIEWER	ACTION CODE	DATE OF ACTION		
(a)	(b)	(c)	(d)	(e)	(f)		(g)	(h)	(i)	(j)	(k)	(l)	(m)	(n)	(o)	(p)	(q)	(r)
		40 17 26.00 20	Inspector certification	1.5.6.1														
			SD-11 Closeout Submittals															
			Weld identifications	1.5.7.1														
		40 95 00	SD-02 Shop Drawings															
			Installation G															
			Wiring G															
			SD-03 Product Data															
			Control Drawings	3.5														
			Sensors and Meters	2.4.2														
			Performance Verification Test	3.6.2														
			(PVT)															
			SD-06 Test Reports															
			Performance Verification	3.6.2														
			Test(PVT)															
			SD-10 Operation and Maintenance															
			Data															
			Training Manual	3.8	G													
			Instrumentation and Control	2.1	G													
			System															

THIS PAGE HAS BEEN INTENTIONALLY LEFT BLANK

SECTION 01 35 26

GOVERNMENTAL SAFETY REQUIREMENTS
09/15

PART 1 GENERAL

1.1 REFERENCES

The publications listed below form a part of this specification to the extent referenced. The publications are referred to within the text by the basic designation only.

AMERICAN SOCIETY OF SAFETY ENGINEERS (ASSE/SAFE)

ASSE/SAFE A10.32	(2012) Fall Protection
ASSE/SAFE A10.34	(2001; R 2012) Protection of the Public on or Adjacent to Construction Sites
ASSE/SAFE Z359.1	(2007) Safety Requirements for Personal Fall Arrest Systems, Subsystems and Components

ASME INTERNATIONAL (ASME)

ASME B30.22	(2010) Articulating Boom Cranes
ASME B30.3	(2012) Tower Cranes
ASME B30.5	(2014) Mobile and Locomotive Cranes
ASME B30.8	(2010) Floating Cranes and Floating Derricks

ASTM INTERNATIONAL (ASTM)

ASTM F855	(2015) Standard Specifications for Temporary Protective Grounds to Be Used on De-energized Electric Power Lines and Equipment

INSTITUTE OF ELECTRICAL AND ELECTRONICS ENGINEERS (IEEE)

IEEE 1048	(2003) Guide for Protective Grounding of Power Lines
IEEE C2	(2012; Errata 2012; INT 1-4 2012; INT 5-7 2013; INT 8 2014) National Electrical Safety Code

INTERNATIONAL SAFETY EQUIPMENT ASSOCIATION (ISEA)

ANSI/ISEA Z87.1	(2010) Occupational and Educational Personal Eye and Face Protection Devices

NATIONAL FIRE PROTECTION ASSOCIATION (NFPA)

NFPA 1	(2015; ERTA 2015) Fire Code
NFPA 10	(2013) Standard for Portable Fire Extinguishers
NFPA 241	(2013) Standard for Safeguarding Construction,Alteration, and Demolition Operations
NFPA 306	(2014) Standard for Control of Gas Hazards on Vessels
NFPA 51B	(2014) Standard for Fire Prevention During Welding, Cutting, and Other Hot Work
NFPA 70	(2014; AMD 1 2013; Errata 1 2013; AMD 2 2013; Errata 2 2013; AMD 3 2014; Errata 3-4 2014; AMD 4-6 2014) National Electrical Code
NFPA 70E	(2015; ERTA 1 2015) Standard for Electrical Safety in the Workplace

U.S. ARMY CORPS OF ENGINEERS (USACE)

EM 385-1-1	(2014) Safety and Health Requirements Manual

U.S. FEDERAL HIGHWAY ADMINISTRATION (FHWA)

MUTCD	(2009) Manual on Uniform Traffic Control Devices

U.S. NATIONAL ARCHIVES AND RECORDS ADMINISTRATION (NARA)

29 CFR 1910	Occupational Safety and Health Standards
29 CFR 1910.146	Permit-required Confined Spaces
29 CFR 1910.147	Control of Hazardous Energy (Lock Out/Tag Out)
29 CFR 1915	Confined and Enclosed Spaces and Other Dangerous Atmospheres in Shipyard Employment
29 CFR 1926	Safety and Health Regulations for Construction
29 CFR 1926.1400	Cranes & Derricks in Construction
29 CFR 1926.16	Rules of Construction
29 CFR 1926.500	Fall Protection
CPL 2.100	(1995) Application of the Permit-Required Confined Spaces (PRCS) Standards, 29 CFR

1910.146

U.S. NAVAL FACILITIES ENGINEERING COMMAND (NAVFAC)

NAVFAC P-307	(2009; Change 1 Mar 2011; Change 2 Aug 2011)Management of Weight Handling Equipment
ND OPNAVINST 5100.23	(2005; Rev G) Navy Occupational Safety and Health (NAVOSH) Program Manual

1.2 DEFINITIONS

a. Competent Person for Fall Protection. A person who is capable of identifying hazardous or dangerous conditions in the personal fall arrest system or any component thereof, as well as their application and use with related equipment, and has the authority to take prompt corrective measures to eliminate the hazards of falling.

b. High Visibility Accident. Any mishap which may generate publicity or high visibility.

c. Medical Treatment. Treatment administered by a physician or by registered professional personnel under the standing orders of a physician. Medical treatment does not include first aid treatment even though provided by a physician or registered personnel.

d. Operating Envelope. The area surrounding any crane. Inside this "envelope" is the crane, the operator, riggers and crane walkers, rigging gear between the hook and the load, the load and the crane's supporting structure (ground, rail, etc.).

e. Recordable Injuries or Illnesses. Any work-related injury or illness that results in:

(1) Death, regardless of the time between the injury and death, or the length of the illness;

(2) Days away from work (any time lost after day of injury/illness onset);

(3) Restricted work;

(4) Transfer to another job;

(5) Medical treatment beyond first aid;

(6) Loss of consciousness; or

(7) A significant injury or illness diagnosed by a physician or other licensed health care professional, even if it did not result in (1) through (6) above.

f. "USACE" property and equipment specified in USACE EM 385-1-1 should be interpreted as Government property and equipment.

g. Weight Handling Equipment (WHE) Accident. A WHE accident occurs when any one or more of the eight elements in the operating envelope fails to perform correctly during operation, including operation during

maintenance or testing resulting in personnel injury or death; material or equipment damage; dropped load; derailment; two-blocking; overload; or collision, including unplanned contact between the load, crane, or other objects. A dropped load, derailment, two-blocking, overload and collision are considered accidents even though no material damage or injury occurs. A component failure (e.g., motor burnout, gear tooth failure, bearing failure) is not considered an accident solely due to material or equipment damage unless the component failure results in damage to other components (e.g., dropped boom, dropped load, roll over, etc.) Any mishap meeting the criteria described above shall be documented in both the Contractor Significant Incident Report (CSIR) and using the NAVFAC prescribed Navy Crane Center (NCC) form submitted within five days both as provided by the Contracting Officer. Comply with additional requirements and procedures for accidents in accordance with NAVFAC P-307, Section 12.

h. Internal Traffic Control Plan (ITCP). Strategies to control the flow of construction workers, vehicles and equipment inside the work zone.

1.3 SUBMITTALS

Government approval is required for submittals with a "G" designation; submittals not having a "G" designation are for Contractor Quality Control approval. Submit the following in accordance with Section 01 33 00 SUBMITTAL PROCEDURES:

Government acceptance is required for submittals with a "G" designation.

SD-01 Preconstruction Submittals

Accident Prevention Plan (APP); G
Activity Hazard Analysis (AHA); G
Crane Critical Lift Plan; G
Proof of qualification for Crane Operators; G
Traffic Control Plan; G
Standard Hand Signals; G

SD-06 Test Reports

Notifications and Reports

Submit reports as their incidence occurs, in accordance with the requirements of the paragraph entitled, "Notifications and Reports."

Accident Reports
Crane Reports
Arc Flash Risk/Hazard Analysis; G

SD-07 Certificates

Confined Space Entry Permit
Hot work permit
Arc Flash Risk/Hazard Analysis Qualifications; G
Contractor Electrical Energized Work Permit; G
Contractor Safety Self-Evaluation Checklist; G
Certificate of Compliance (Crane)

Submit one copy of each permit/certificate attached to each

Daily Quality Control Report.

1.4 CONTRACTOR SAFETY SELF-EVALUATION CHECKLIST

Contracting Officer will provide a "Contractor Safety Self-Evaluation checklist" to the Contractor at the pre-construction conference. Complete the checklist monthly and submit with each request for payment voucher. An acceptable score of 90 or greater is required. Failure to submit the completed safety self-evaluation checklist or achieve a score of at least 90 may result in retention of up to 10 percent of the voucher. Additionally, provide a Monthly Exposure Report and attach to the monthly billing request. This report is a compilation of employee-hours worked each month for all site workers, both prime and subcontractor. Failure to submit the report may result in retention of up to 10 percent of the voucher. The Contracting Officer will submit a copy of the Contractor Safety Self-Evaluation and Monthly Exposure Report to the local safety and occupational health office.

1.5 REGULATORY REQUIREMENTS

In addition to the detailed requirements included in the provisions of this contract, comply with the most recent edition of USACE EM 385-1-1, NFPA 70E, IEEE C2 and federal, state, and local, laws, ordinances, criteria, rules and regulations. Submit matters of interpretation of standards to the appropriate administrative agency for resolution before starting work. Where the requirements of this specification, applicable laws, criteria, ordinances, regulations, and referenced documents vary, the most stringent requirements govern.

1.6 SITE QUALIFICATIONS, DUTIES AND MEETINGS

1.6.1 Personnel Qualifications

1.6.1.1 Site Safety and Health Officer (SSHO)

The SSHO must meet the requirements of EM 385-1-1 section 1 and ensure that the requirements of 29 CFR 1926.16 are met for the project. Provide a Safety oversight team that includes a minimum of one (1) person at each project site to function as the Site Safety and Health Officer (SSHO). The SSHO or an equally-qualified Designated Representative/alternate shall be at the work site at all times to implement and administer the Contractor's safety program and government-accepted Accident Prevention Plan. The SSHO's training, experience, and qualifications shall be as required by EM 385-1-1 paragraph 01.A.17, entitled SITE SAFETY AND HEALTH OFFICER (SSHO), and all associated sub-paragraphs.

A Competent Person shall be provided for all of the hazards identified in the Contractor's Safety and Health Program in accordance with the accepted Accident Prevention Plan, and shall be on-site at all times when the work that presents the hazards associated with their professional expertise is being performed. Provide the credentials of the Competent Persons(s) to the the Contracting Officer for acceptance in consultation with the Safety Office.

1.6.1.1.1 Contractor Quality Control (QC) Person

The Contractor Quality Control Person cannot be the SSHO on this project, even though the QC has safety inspection responsibilities as part of the QC duties.

1.6.1.2 Competent Person for Confined Space Entry

Provide a competent person for confined space meeting the definition and requirements of EM 385-1-1. If work involves marine operations that handle combustible or hazardous materials, this person shall have the ability to understand and follow through on the air sampling, PPE, and instructions of a Marine Chemist, Coast Guard authorized persons, or Certified Industrial Hygienist. All confined and enclosed space work shall comply with NFPA 306 or as applicable, 29 CFR 1910.147 for general industry.

1.6.1.3 Crane Operators

Meet the crane operators requirements in USACE EM 385-1-1, Section 16 and Appendix I. In addition, for mobile cranes, designate crane operators as qualified by a source that qualifies crane operators (i.e., union, a government agency, or and organization that tests and qualifies crane operators). Provide proof of current qualification. In addition, the Contractor shall comply with Contractor Operated Crane Requirements included in the latest revision of document NAVFAC P-307 Section 1.7.2 "Contractor Operated Cranes," and Appendix P, Figure P-1 and with 29 CFR 1926, Subpart CC.

1.6.2 Personnel Duties

1.6.2.1 Site Safety and Health Officer (SSHO)

The SSHO shall:

a. Conduct daily safety and health inspections and maintain a written log which includes area/operation inspected, date of inspection, identified hazards, recommended corrective actions, estimated and actual dates of corrections. Attach safety inspection logs to the Contractors' daily quality control report.

b. Conduct mishap investigations and complete required reports. Maintain the OSHA Form 300 and Daily Production reports for prime and sub-contractors.

c. Maintain applicable safety reference material on the job site.

d. Attend the pre-construction conference, pre-work meetings including preparatory inspection meeting, and periodic in-progress meetings.

e. Implement and enforce accepted APPS and AHAs.

f. Maintain a safety and health deficiency tracking system that monitors outstanding deficiencies until resolution. Post a list of unresolved safety and health deficiencies on the safety bulletin board.

g. Ensure sub-contractor compliance with safety and health requirements.

h. Ensure an approved "Contractor Electrical Energized Work Permit" prior to starting any activity on energized electrical systems.

i. Maintain a list of hazardous chemicals on site and their material safety data sheets.

Failure to perform the above duties will result in dismissal of the

superintendent, QC Manager, and/or SSHO, and a project work stoppage. The project work stoppage will remain in effect pending approval of a suitable replacement.

1.6.3 Meetings

1.6.3.1 Preconstruction Conference

a. Contractor representatives who have a responsibility or significant role in accident prevention on the project shall attend the preconstruction conference. This includes the project superintendent, site safety and health officer, quality control supervisor, or any other assigned safety and health professionals who participated in the development of the APP (including the Activity Hazard Analyses (AHAs) and special plans, program and procedures associated with it).

b. Discuss the details of the submitted APP to include incorporated plans, programs, procedures and a listing of anticipated AHAs that will be developed and implemented during the performance of the contract. This list of proposed AHAs will be reviewed at the conference and an agreement will be reached between the Contractor and the Contracting Officer's representative as to which phases will require an analysis. In addition, establish a schedule for the preparation, submittal, review, and acceptance of AHAs to preclude project delays.

c. Deficiencies in the submitted APP will be brought to the attention of the Contractor at the preconstruction conference, and the Contractor shall revise the plan to correct deficiencies and re-submit it for acceptance. Do not begin work until there is an accepted APP.

1.6.3.2 Safety Meetings

Conduct and document meetings as required by EM 385-1-1. Attach minutes showing contract title, signatures of attendees and a list of topics discussed to the Contractors' daily quality control report.

1.7 ACCIDENT PREVENTION PLAN (APP)

Use a qualified person to prepare the written site-specific APP. Prepare the APP in accordance with the format and requirements of USACE EM 385-1-1 and as supplemented herein. Cover all paragraph and subparagraph elements in USACE EM 385-1-1, Appendix A, "Minimum Basic Outline for Accident Prevention Plan". Specific requirements for some of the APP elements are described below. The APP shall be job-specific and address any unusual or unique aspects of the project or activity for which it is written. The APP shall interface with the Contractor's overall safety and health program. Include any portions of the Contractor's overall safety and health program referenced in the APP in the applicable APP element and made site-specific. The Government considers the Prime Contractor to be the "controlling authority" for all work site safety and health of the subcontractors. Contractors are responsible for informing their subcontractors of the safety provisions under the terms of the contract and the penalties for noncompliance, coordinating the work to prevent one craft from interfering with or creating hazardous working conditions for other crafts, and inspecting subcontractor operations to ensure that accident prevention responsibilities are being carried out. The APP shall be signed by the person and firm (senior person) preparing the APP, the Contractor, the on-site superintendent, the designated site safety and

health officer, the Contractor Quality Control Manager, and any designated CSP or CIH.

Submit the APP to the Contracting Officer 15 calendar days prior to the date of the preconstruction conference for acceptance. Work cannot proceed without an accepted APP.

Once accepted by the Contracting Officer, the APP and attachments will be enforced as part of the contract. Disregarding the provisions of this contract or the accepted APP will be cause for stopping of work, at the discretion of the Contracting Officer, until the matter has been rectified.

Once work begins, changes to the accepted APP shall be made with the knowledge and concurrence of the Contracting Officer, project superintendent, SSHO and quality control manager. Should any severe hazard exposure, i.e. imminent danger, become evident, stop work in the area, secure the area, and develop a plan to remove the exposure and control the hazard. Notify the Contracting Officer within 24 hours of discovery. Eliminate/remove the hazard. In the interim, take all necessary action to restore and maintain safe working conditions in order to safeguard onsite personnel, visitors, the public (as defined by ASSE/SAFE A10.34,) and the environment.

Copies of the accepted plan will be maintained at the Contracting Officer's office and at the job site. Continuously review and amend the APP, as necessary, throughout the life of the contract. Incorporate unusual or high-hazard activities not identified in the original APP as they are discovered.

1.7.1 EM 385-1-1 Contents

In addition to the requirements outlined in Appendix A of USACE EM 385-1-1, the following is required:

a. Names and qualifications (resumes including education, training, experience and certifications) of all site safety and health personnel designated to perform work on this project to include the designated site safety and health officer and other competent and qualified personnel to be used such as CSPs, CIHs, STSs, CHSTs. Specify the duties of each position.

b. Qualifications of competent and of qualified persons. As a minimum, designate and submit qualifications of competent persons for each of the following major areas: excavation; scaffolding; fall protection; hazardous energy; confined space; health hazard recognition, evaluation and control of chemical, physical and biological agents; personal protective equipment and clothing to include selection, use and maintenance.

c. Confined Space Entry Plan. Develop a confined and/or enclosed space entry plan in accordance with USACE EM 385-1-1, applicable OSHA standards 29 CFR 1910, 29 CFR 1915, and 29 CFR 1926, OSHA Directive CPL 2.100, and any other federal, state and local regulatory requirements identified in this contract. Identify the qualified person's name and qualifications, training, and experience. Delineate the qualified person's authority to direct work stoppage in the event of hazardous conditions. Include procedure for rescue by contractor personnel and the coordination with emergency responders. (If there is no confined space work, include a statement that no confined space

work exists and none will be created.)

d. Crane Critical Lift Plan. Prepare and sign weight handling critical lift plans for lifts over 75 percent of the capacity of the crane or hoist (or lifts over 50 percent of the capacity of a barge mounted mobile crane's hoists) at any radius of lift; lifts involving more than one crane or hoist; lifts of personnel; and lifts involving non-routine rigging or operation, sensitive equipment, or unusual safety risks. Submit 15 calendar days prior to on-site work and include the requirements of USACE EM 385-1-1, paragraph 16.H. and the following:

(1) For lifts of personnel, demonstrate compliance with the requirements of 29 CFR 1926.1400.

e. Fall Protection and Prevention (FP&P) Program Documentation. The program documentation shall be site specific and address all fall hazards in the work place and during different phases of construction. Address how to protect and prevent workers from falling to lower levels when they are exposed to fall hazards above 6 feet. A qualified person for fall protection shall prepare and sign the program documentation. Include fall protection and prevention systems, equipment and methods employed for every phase of work, responsibilities, assisted rescue, self-rescue and evacuation procedures, training requirements, and monitoring methods. Revise the Fall Protection and Prevention Program Documentation every six months for lengthy projects, reflecting any changes during the course of construction due to changes in personnel, equipment, systems or work habits. Keep and maintain the accepted Fall Protection and Prevention Program Documentation at the job site for the duration of the project. Include the Fall Protection and Prevention Program Documentation in the Accident Prevention Plan (APP).

The FP&P Plan shall include a Rescue and Evacuation Plan in accordance with USACE EM 385-1-1, Section 21.M. The plan shall include a detailed discussion of the following: methods of rescue; methods of self-rescue; equipment used; training requirement; specialized training for the rescuers; procedures for requesting rescue and medical assistance; and transportation routes to a medical facility. Include the Rescue and Evacuation Plan in the Fall Protection and Prevention (FP&P) Plan, and as part of the Accident Prevention Plan (APP).

f. Occupant Protection Plan. The safety and health aspects of lead-based paint removal, prepared in accordance with Section 02 82 33.13 20 REMOVAL/CONTROL AND DISPOSAL OF PAINT WITH LEAD.

g. Lead Compliance Plan. The safety and health aspects of lead work, prepared in accordance with Section 02 83 33.13 20 REMOVAL/CONTROL AND DISPOSAL OF PAINT WITH LEAD.

h. Asbestos Hazard Abatement Plan. The safety and health aspects of asbestos work, prepared in accordance with Section 02 82 16.00 20 ENGINEERING CONTROL OF ASBESTOS CONTAINING MATERIALS.

i. Site Safety and Health Plan. The safety and health aspects prepared in accordance with Section 01 35 26 GOVERNMENTAL SAFETY REQUIREMENTS.

j. Site Demolition Plan. The safety and health aspects prepared in

accordance with Section 02 41 00 DEMOLITION and referenced sources. Include engineering survey as applicable.

1.8 ACTIVITY HAZARD ANALYSIS (AHA)

The Activity Hazard Analysis (AHA) format shall be in accordance with USACE EM 385-1-1, Section 1. NAVFAC Midlant shall follow latest edition authorized by command. Submit the AHA for review at least 7 calendar days prior to the start of each phase. Format subsequent AHAs as amendments to the APP. The analysis should be used during daily inspections to ensure the implementation and effectiveness of the activity's safety and health controls.

The AHA list will be reviewed periodically (at least monthly) at the Contractor supervisory safety meeting and updated as necessary when procedures, scheduling, or hazards change.

Develop the activity hazard analyses using the project schedule as the basis for the activities performed. Any activities listed on the project schedule will require an AHA. The AHAs will be developed by the contractor, supplier or subcontractor and provided to the prime contractor for submittal to the Contracting Officer.

1.9 DISPLAY OF SAFETY INFORMATION

Within 1 calendar day after commencement of work, erect a safety bulletin board at the job site. Where size, duration, or logistics of project do not facilitate a bulletin board, an alternative method, acceptable to the Contracting Officer, that is accessible and includes all mandatory information for employee and visitor review, shall be deemed as meeting the requirement for a bulletin board. Include and maintain information on safety bulletin board as required by EM 385-1-1, section 01.A.06. Additional items required to be posted include:

a. Confined space entry permit.

b. Hot work permit.

c. Contractor Electrical Energized Work Permit.

1.10 SITE SAFETY REFERENCE MATERIALS

Maintain safety-related references applicable to the project, including those listed in the article "References." Maintain applicable equipment manufacturer's manuals.

1.11 EMERGENCY MEDICAL TREATMENT

Contractors will arrange for their own emergency medical treatment. Government has no responsibility to provide emergency medical treatment.

1.12 NOTIFICATIONS AND REPORTS

1.12.1 Accident Notification

Notify the Contracting Officer as soon as practical, but not later than four hours, after any accident meeting the definition of Recordable Injuries or Illnesses or High Visibility Accidents, property damage equal

to or greater than $2,000, or any weight handling equipment accident. Within notification include contractor name; contract title; type of contract; name of activity, installation or location where accident occurred; date and time of accident; names of personnel injured; extent of property damage, if any; extent of injury, if known, and brief description of accident (to include type of construction equipment used, PPE used, etc.). Preserve the conditions and evidence on the accident site until the Government investigation team arrives on-site and Government investigation is conducted.

1.12.2 Accident Reports

a. Conduct an accident investigation for recordable injuries and illnesses, for Medical Treatment defined in paragraph DEFINITIONS, property damage accidents resulting in at least $20,000 in damages, and near misses as defined in EM 385-1-1, to establish the root cause(s) of the accident. Complete the Contractor Incident Report (CIR), and electronically file the report in ESAMS within 5 calendar day(s) of the accident.

b. Near Misses: Complete the applicable documentation in NAVFAC Contractor Incident Reporting System (CIRS), and electronically submit via the NAVFAC Enterprise Safety Applications Management System (ESAMS).

c. Conduct an accident investigation for any weight handling equipment accident (including rigging gear accidents) to establish the root cause(s) of the accident, complete the WHE Accident Report (Crane and Rigging Gear) form and provide the report to the Contracting Officer within 30 calendar days of the accident. Do not proceed with crane operations until cause is determined and corrective actions have been implemented to the satisfaction of the contracting officer. The Contracting Officer will provide a blank copy of the accident report form.

1.12.3 Crane Reports

Submit crane inspection reports required in accordance with USACE EM 385-1-1, Appendix I and as specified herein with Daily Reports of Inspections.

1.12.4 Certificate of Compliance

Provide a Certificate of Compliance for each crane entering an activity under this contract (see Contracting Officer for a blank certificate). State within the certificate that the crane and rigging gear meet applicable OSHA regulations (with the Contractor citing which OSHA regulations are applicable, e.g., cranes used in construction, demolition, or maintenance comply with 29 CFR 1926 and USACE EM 385-1-1 Section 16 and Appendix I. Certify on the Certificate of Compliance that the crane operator(s) is qualified and trained in the operation of the crane to be used. Also certify that all of its crane operators working on the DOD activity have been trained in the proper use of all safety devices (e.g., anti-two block devices). Post certifications on the crane.

1.13 HOT WORK (Welding And Cutting, Etc.)

Hot work permits will only be issued to the Prime Contractor. Prime Contractor shall notify FEAD/ROICC office of issuance of hot work permits

and all renewals of hot work permits. Copies of all hot work permits and renewals shall be attached to daily quality control reports.

Submit and obtain a written permit prior to performing "Hot Work" (welding, cutting, etc.) or operating other flame-producing/spark producing devices, from the Fire Division. A permit is required from the Explosives Safety Office for work in and around where explosives are processed, stored, or handled. CONTRACTORS ARE REQUIRED TO MEET ALL CRITERIA BEFORE A PERMIT IS ISSUED. Provide at least two (2) twenty (20) pound 4A:20 BC rated extinguishers for normal "Hot Work". All extinguishers shall be current inspection tagged, approved safety pin and tamper resistant seal. It is also mandatory to have a designated FIRE WATCH for any "Hot Work" done at this activity. The Fire Watch shall be trained in accordance with NFPA 51B and remain on-site for a minimum of 30 minutes after completion of the task or as specified on the hot work permit.

When starting work in the facility, require personnel to familiarize themselves with the location of the nearest fire alarm boxes and place in memory the emergency Fire Division phone number. ANY FIRE, NO MATTER HOW SMALL, SHALL BE REPORTED TO THE RESPONSIBLE FIRE DIVISION IMMEDIATELY.

Obtain services from a NFPA Certified Marine Chemist for "HOT WORK" within or around flammable materials (such as fuel systems, welding/cutting on fuel pipes) or confined spaces (such as sewer wet wells, manholes, vaults, etc.) that have the potential for flammable or explosive atmospheres.

1.14 FACILITY OCCUPANCY CLOSURE

Streets, walks, and other facilities occupied and used by the Government shall not be closed or obstructed without written permission from the Contracting Officer.

1.15 SEVERE STORM PLAN

In the event of a severe storm warning, the Contractor must:

a. Secure outside equipment and materials and place materials that could be damaged in protected areas.

b. Check surrounding area, including roof, for loose material, equipment, debris, and other objects that could be blown away or against existing facilities.

c. Ensure that temporary erosion controls are adequate.

1.16 CONFINED SPACE ENTRY REQUIREMENTS.

Contractors entering and working in confined spaces performing general industry work are required to follow the requirements of OSHA 29 CFR 1910, 29 CFR 1910.146, and EM 385-1-1 Section 34 Confined Space Entry.

NAVFAC personnel entering and working in confined spaces performing non-maritime facility work are required to follow the requirements of ND OPNAVINST 5100.23 Chapter 27.

1.17 TRAFFIC CONTROL

The requirements contained in this paragraph are in addition to the

requirements contained in EM 385-1-1. In case of a conflict, the more stringent requirement applies. Traffic Control shall be accomplished in accordance with MUTCD.

1.17.1 Traffic Control Plan

Prior to the commencement of contract operations, the Contractor shall submit for acceptance the complete details of the proposed traffic control plan for the maintenance of traffic and access through the contract work area.

Include traffic control and traffic control signal systems in each Activity Hazard Analysis as applicable.

1.17.2 Signal Systems, Personnel And Procedures

Signal systems, personnel and procedures shall comply with EM 385-1-1 Section 08.B SIGNAL SYSTEMS, PERSONNEL AND PROCEDURES.

1.17.2.1 Standard Hand Signals

Standard hand signals shall be submitted for acceptance and shall be posted at the operator's position, signal control points and other points as necessary to inform those concerned.

1.17.3 Road Closings

Traffic control is extremely important on highways, in residential areas, and at construction sites. When traffic may pose a hazard to operations, public roads will be closed. Road closings shall be coordinated in writing with appropriate local agencies. Traffic controls and signage shall comply with MUTCD.

1.17.4 Operating Precautions

When a road cannot be closed, the following precautions shall be taken:

a. “FLAGGER” (MUTCD W-20-7) or “WORKERS AHEAD: (W21-1) or similar appropriate signs shall be placed along the roadway, 1,000 ft (304.8m) and 500 ft (30.5 m) before the work zone, on both sides of the work zone”.

b. Sufficient number of flag persons shall be used to control traffic within the work area.

c. Flag persons shall be used and shall receive instruction in flagging operations before being placed in traffic (training and certification by the National Safety Council (NSC) is recommended).

d. All flag persons shall wear high-visibility apparel in accordance with EM 385-1-1, paragraph 05.F, safety-toed footwear and hard hats.

e. "STOP/SLOW" paddles, preferably mounted on a 6 ft staff, will be used for traffic control.

f. Flag persons shall be able to communicate with each other and with the foreman, and effectively signal/direct the affected public.

g. Two-way radios shall be used whenever visual contact between flaggers

is not maintained.

1.17.5 Construction Vehicles

All construction vehicles and all vehicles exceeding 1-1/2 tons (1360.8 kg) shall have a signal person to assist in backing and maneuvering in residential and construction areas.

1.17.6 Internal Traffic Control Plans (ITCP)

Internal traffic control plans (ITCP) (written plans which address separation and safety of personnel and moving equipment) will be attached to all AHA's when interaction between personnel and moving equipment will occur or physical changes occur onsite which could affect personnel or moving equipment.

PART 2 PRODUCTS

2.1 CONFINED SPACE SIGNAGE

Provide permanent signs integral to or securely attached to access covers for new permit-required confined spaces. Signs wording: "DANGER--PERMIT-REQUIRED CONFINED SPACE - DO NOT ENTER -" in bold letters a minimum of one inch in height and constructed to be clearly legible with all paint removed. The signal word "DANGER" shall be red and readable from 5 feet.

PART 3 EXECUTION

3.1 CONSTRUCTION AND/OR OTHER WORK

Comply with USACE EM 385-1-1, NFPA 1, NFPA 70, NFPA 70E, NFPA 241, IEEE C2, the APP, the AHA, Federal and/or State OSHA regulations, and other related submittals and activity fire and safety regulations. The most stringent standard prevails.

PPE is required at all times, in accordance with EM 385-1-1, for all personnel who enters a construction site area. In addition to the requirements of EM 385-1-1, Safety Glasses ANSI/ISEA Z87.1 will be worn at all times on construction sites, unless the competent person identifies in the Contractor's accepted activity hazard analysis that an equal or greater hazard is presented in the mandatory wearing of safety glasses. Use personal hearing protection at all times in designated noise hazardous areas or when performing noise hazardous tasks.

Mandatory PPE on all construction sites includes:

a. Hard Hat

b. Safety Glasses

c. Safety-Toed Shoes or Boots

3.1.1 Hazardous Material Use

Each hazardous material must receive approval from the Contracting Officer or their designated representative prior to being brought onto the job site or prior to any other use in connection with this contract. Allow a minimum of 10 working days for processing of the request for use of a

hazardous material.

3.1.2 Hazardous Material Exclusions

Notwithstanding any other hazardous material used in this contract, radioactive materials or instruments capable of producing ionizing/non-ionizing radiation (with the exception of radioactive material and devices used in accordance with USACE EM 385-1-1 such as nuclear density meters for compaction testing and laboratory equipment with radioactive sources) as well as materials which contain asbestos, mercury or polychlorinated biphenyls, di-isocynates, lead-based paint are prohibited. The Contracting Officer, upon written request by the Contractor, may consider exceptions to the use of any of the above excluded materials. Low mercury lamps used within fluorescent lighting fixtures are allowed as an exception without further Contracting Officer approval. Notify the Radiation Safety Officer (RSO) prior to excepted items of radioactive material and devices being brought on base.

3.1.3 Unforeseen Hazardous Material

The design should have identified materials such as PCB, lead paint, and friable and non-friable asbestos, and other OSHA regulated chemicals (i.e. 29 CFR Part 1910.1000). If additional material, not indicated, that may be hazardous to human health upon disturbance during construction operations is encountered, stop that portion of work and notify the Contracting Officer immediately. Within 14 calendar days the Government will determine if the material is hazardous. If material is not hazardous or poses no danger, the Government will direct the Contractor to proceed without change. If material is hazardous and handling of the material is necessary to accomplish the work, the Government will issue a modification pursuant to "FAR 52.243-4, Changes" and "FAR 52.236-2, Differing Site Conditions."

3.2 PRE-OUTAGE COORDINATION MEETING

Apply for utility outages at least 15 days in advance. As a minimum, the request should include the location of the outage, utilities being affected, duration of outage and any necessary sketches. Special requirements for electrical outage requests are contained elsewhere in this specification section. Once approved, and prior to beginning work on the utility system requiring shut down, attend a pre-outage coordination meeting with the Contracting Officer to review the scope of work and the lock-out/tag-out procedures for worker protection. No work will be performed on energized electrical circuits unless proof is provided that no other means exist. For electrical work positive cable/circuit identification must be made prior to submitting any outage request. Arrangements are to be coordinated with the Contracting Officer and Station Utilities for identification. The Contracting Officer will not accept an outage request until the Contractor satisfactorily documents that the circuits have been clearly identified. Following the application of lockout/tag out devices to all hazardous energy sources, applicable AHA should outline equipment restart methods to ensure "zero energy" state has been accomplished.

3.3 CONTROL OF HAZARDOUS ENERGY (LOCKOUT/TAGOUT)

Ensure that each employee is familiar with and complies with these procedures and USACE EM 385-1-1, Section 12, Control of Hazardous Energy.

3.4 FALL HAZARD PROTECTION AND PREVENTION PROGRAM

Establish a fall protection and prevention program, for the protection of all employees exposed to fall hazards. Within the program include company policy, identify responsibilities, education and training requirements, fall hazard identification, prevention and control measures, inspection, storage, care and maintenance of fall protection equipment and rescue and evacuation procedures.

3.4.1 Training

Institute a fall protection training program. As part of the Fall Hazard Protection and Prevention Program, provide training for each employee who might be exposed to fall hazards. Provide training by a competent person for fall protection in accordance with USACE EM 385-1-1, Section 21.B.

3.4.2 Fall Protection Equipment and Systems

Enforce use of the fall protection equipment and systems designated for each specific work activity in the Fall Protection and Prevention Plan and/or AHA at all times when an employee is exposed to a fall hazard. Protect employees from fall hazards as specified in EM 385-1-1, Section 21. In addition to the required fall protection systems, safety skiff, personal floatation devices, life rings etc., are required when working above or next to water in accordance with USACE EM 385-1-1, Paragraphs 21.N through 21.N.04. Personal fall arrest systems are required when working from an articulating or extendible boom, swing stages, or suspended platform. In addition, personal fall arrest systems are required when operating other equipment such as scissor lifts if the work platform is capable of being positioned outside the wheelbase. The need for tying-off in such equipment is to prevent ejection of the employee from the equipment during raising, lowering, or travel. Fall protection must comply with 29 CFR 1926.500, Subpart M, USACE EM 385-1-1 and ASSE/SAFE A10.32.

3.4.2.1 Personal Fall Arrest Equipment

Personal fall arrest equipment, systems, subsystems, and components shall meet ASSE/SAFE Z359.1. Only a full-body harness with a shock-absorbing lanyard or self-retracting lanyard is an acceptable personal fall arrest body support device. Body belts may only be used as a positioning device system (for uses such as steel reinforcing assembly and in addition to an approved fall arrest system). Harnesses shall have a fall arrest attachment affixed to the body support (usually a Dorsal D-ring) and specifically designated for attachment to the rest of the system. Only locking snap hooks and carabiners shall be used. Webbing, straps, and ropes shall be made of synthetic fiber. The maximum free fall distance when using fall arrest equipment shall not exceed 6 feet. The total fall distance and any swinging of the worker (pendulum-like motion) that can occur during a fall shall always be taken into consideration when attaching a person to a fall arrest system.

3.4.3 Fall Protection for Roofing Work

Implement fall protection controls based on the type of roof being constructed and work being performed. Evaluate the roof area to be accessed for its structural integrity including weight-bearing capabilities for the projected loading.

a. Low Sloped Roofs:

(1) For work within 6 feet of an edge, on low-slope roofs, protect personnel from falling by use of personal fall arrest systems, guardrails, or safety nets. A safety monitoring system used by itself as the only form of fall protection system is not adequate fall protection and is not authorized.

(2) For work greater than 6 feet from an edge, erect and install warning lines in accordance with 29 CFR 1926.500 and USACE EM 385-1-1.

b. Steep-Sloped Roofs: Work on steep-sloped roofs requires a personal fall arrest system, guardrails with toe-boards, or safety nets. This requirement also includes residential or housing type construction.

3.4.4 Horizontal Lifelines

Design, install, certify and use under the supervision of a qualified person horizontal lifelines for fall protection as part of a complete fall arrest system which maintains a safety factor of 2 (29 CFR 1926.500).

3.4.5 Guardrails and Safety Nets

Design, install and use guardrails and safety nets in accordance with EM 385-1-1 and 29 CFR 1926 Subpart M.

3.4.6 Rescue and Evacuation Procedures

When personal fall arrest systems are used, the contractor must ensure that the mishap victim can self-rescue or can be rescued promptly should a fall occur. Prepare a Rescue and Evacuation Plan and include a detailed discussion of the following: methods of rescue; methods of self-rescue; equipment used; training requirement; specialized training for the rescuers; procedures for requesting rescue and medical assistance; and transportation routes to a medical facility. Include the Rescue and Evacuation Plan within the Activity Hazard Analysis (AHA) for the phase of work, in the Fall Protection and Prevention (FP&P) Plan, and the Accident Prevention Plan (APP).

3.5 SCAFFOLDING

Provide employees with a safe means of access to the work area on the scaffold. Climbing of any scaffold braces or supports not specifically designed for access is prohibited. Access scaffold platforms greater than 20 feet maximum in height by use of a scaffold stair system. Do not use vertical ladders commonly provided by scaffold system manufacturers for accessing scaffold platforms greater than 20 feet maximum in height. The use of an adequate gate is required. Ensure that employees are qualified to perform scaffold erection and dismantling. Do not use scaffold without the capability of supporting at least four times the maximum intended load or without appropriate fall protection as delineated in the accepted fall protection and prevention plan. Stationary scaffolds must be attached to structural building components to safeguard against tipping forward or backward. Give special care to ensure scaffold systems are not overloaded. Side brackets used to extend scaffold platforms on self-supported scaffold systems for the storage of material is prohibited. The first tie-in shall be at the height equal to 4 times the width of the smallest dimension of the scaffold base. Place work platforms

on mud sills. Scaffold or work platform erectors shall have fall protection during the erection and dismantling of scaffolding or work platforms that are more than six feet. Delineate fall protection requirements when working above six feet or above dangerous operations in the Fall Protection and Prevention (FP&P) Plan and Activity Hazard Analysis (AHA) for the phase of work.

3.6 EQUIPMENT

3.6.1 Material Handling Equipment

a. Material handling equipment such as forklifts shall not be modified with work platform attachments for supporting employees unless specifically delineated in the manufacturer's printed operating instructions.

b. The use of hooks on equipment for lifting of material must be in accordance with manufacturer's printed instructions. Additionally, when material handling equipment is used as a crane it must meet NAVFAC P-307 requirements in Sections 1.7.2, "Contractor Operated Cranes," and 12, "Investigation and Reporting of Crane and Rigging Gear Accidents."

c. Operators of forklifts or power industrial trucks shall be licensed in accordance with OSHA. Proof of qualifications for operator shall be kept on the project site and addressed as part of the AHA.

3.6.2 Weight Handling Equipment

a. Equip cranes and derricks as specified in EM 385-1-1, section 16.

b. Notify the Contracting Officer 15 days in advance of any cranes entering the activity so that necessary quality assurance spot checks can be coordinated. Prior to cranes entering federal activities, a Crane Access Permit must be obtained from the Contracting Officer. Acopy of the permitting process will be provided at the Preconstruction Conference. Contractor's operator shall remain with the crane during the spot check.

c. Comply with the crane manufacturer's specifications and limitations for erection and operation of cranes and hoists used in support of the work. Perform erection under the supervision of a designated person (as defined in ASME B30.5). Perform all testing in accordance with the manufacturer's recommended procedures.

d. Comply with ASME B30.5 for mobile and locomotive cranes, ASME B30.22 for articulating boom cranes, ASME B30.3 for construction tower cranes, and ASME B30.8 for floating cranes and floating derricks.

e. Under no circumstance shall a Contractor make a lift at or above 90 percent of the crane's rated capacity in any configuration.

f. When operating in the vicinity of overhead transmission lines, operators and riggers shall be alert to this special hazard and follow the requirements of USACE EM 385-1-1 Section 11, NAVFAC P-307 Figure 10-3 and ASME B30.5 or ASME B30.22 as applicable.

g. Do not use crane suspended personnel work platforms (baskets) unless the Contractor proves that using any other access to the work location

would provide a greater hazard to the workers or is impossible. Do not lift personnel with a line hoist or friction crane.

h. Inspect, maintain, and recharge portable fire extinguishers as specified in NFPA 10, Standard for Portable Fire Extinguishers.

i. All employees must keep clear of loads about to be lifted and of suspended loads.

j. Use cribbing when performing lifts on outriggers.

k. The crane hook/block must be positioned directly over the load. Side loading of the crane is prohibited.

l. A physical barricade must be positioned to prevent personnel from entering the counterweight swing (tail swing) area of the crane.

m. Certification records which include the date of inspection, signature of the person performing the inspection, and the serial number or other identifier of the crane that was inspected shall always be available for review by Contracting Officer personnel.

n. Written reports listing the load test procedures used along with any repairs or alterations performed on the crane shall be available for review by Contracting Officer personnel.

o. Certify that all crane operators have been trained in proper use of all safety devices (e.g. anti-two block devices).

p. Take steps to ensure that wind speed does not contribute to loss of control of the load during lifting operations. Prior to conducting lifting operations set a maximum wind speed at which a crane can be safely operated based on the equipment being used, the load being lifted, experience of operators and riggers, and hazards on the work site. This maximum wind speed determination shall be included as part of the activity hazard analysis plan for that operation.

3.6.3 Machinery and Mechanized Equipment

a. Proof of qualifications for operator shall be kept on the project site for review.

b. Manufacturer specifications or owner's manual for the equipment shall be on-site and reviewed for additional safety precautions or requirements that are sometimes not identified by OSHA or USACE EM 385-1-1. Incorporate such additional safety precautions or requirements into the AHAs.

c. Machinery & Mechanized Equipment are subject to additional Navy proof of certification. A certification form for acceptance by the Contracting Officer prior to being placed into use may be required.

3.6.4 USE OF EXPLOSIVES

Explosives shall not be used or brought to the project site without prior written approval from the Contracting Officer. Such approval shall not relieve the Contractor of responsibility for injury to persons or for damage to property due to blasting operations.

3.7 EXCAVATIONS

Soil classification must be performed by a competent person in accordance with 29 CFR 1926 and EM 385-1-1. A competent person for excavation must be on site during all excavation work.

3.7.1 Utility Locations

All underground utilities in the work area must be positively identified by a third party, independent, private utility locating company in addition to any station locating service and coordinated with the station utility department. Any markings made during the utility investigation must be maintained throughout the contract.

3.7.2 Utility Location Verification

Physically verify underground utility locations, including utility depth, by hand digging using wood or fiberglass handled tools when any adjacent construction work is expected to come within three feet of the underground system.

3.7.3 Utilities Within and Under Concrete, Bituminous Asphalt, and Other Impervious Surfaces

Utilities located within and under concrete slabs or pier structures, bridges, parking areas, and the like, are extremely difficult to identify. Whenever contract work involves chipping, saw cutting, or core drilling through concrete, bituminous asphalt or other impervious surfaces, the existing utility location must be coordinated with station utility departments in addition to location and depth verification by a third party, independent, private locating company. The third party, independent, private locating company shall locate utility depth by use of Ground Penetrating Radar (GPR), X-ray, bore scope, or ultrasound prior to the start of demolition and construction. Outages to isolate utility systems must be used in circumstances where utilities are unable to be positively identified. The use of historical drawings does not alleviate the contractor from meeting this requirement.

3.7.4 Location of Underground Utilities

Location and Protection of underground utilities shall be the responsibility of the Contractor. Where existing-to-remain piping, utilities, and underground obstructions of any type are indicated in locations to be traversed by new piping, ducts, and other evacuations, the elevations of the existing utilities and obstructions shall be determined before the new work is completed.

a. In addition, the Contractor shall be responsible for obtaining the services of a professional utility locator prior to digging. Contractor shall provide documentation that the site has been surveyed and checked for underground utilities. All utilities shall be located, including but not limited to power, water, sewer, storm drains, fiber optics, T.V. cable, telephone, and intrusion detection wiring. A set of known utility drawings will be available in the OICC office for review to assist the locator.

b. It is mandatory that the Contractor also contact the Base Telephone Office at (910) 451-2531 prior to accomplishing any digging at Camp Lejeune. A telephone office representative will assist in locating

telephone lines.

c. It is mandatory that the Contractor also contact Charter Communications, cable TV service prior to accomplishing any digging at Camp Lejeune, to ensure that all buried cable lines are identified. Contact Mr. Olin Criswell at (910) 353-8677 for assistance.

d. It is mandatory that the Contractor also contact the North Carolina One-Call Center to coordinate the location of underground natural gas infrastructure. North Carolina 811, Inc. can be reached at 811 on a touch-tone phone in the state of North Carolina or toll-free at 1-800-632-4949 if calling from out of state. Work request may also be submitted online at www.nc811.org.

3.7.4.1 The Locations of Underground Utilities

The locations of underground utilities shown are only approximate and the information provided may be incomplete. Contractor shall attempt to ascertain locations of existing underground utilities prior to and during digging operations.

3.7.4.2 Damage to Underground Utilities

Immediate notice shall be delivered to the Contracting Officer of any damage. The Contractor shall make temporary repairs immediately and shall provide permanent repairs as soon as practicable.

3.8 ELECTRICAL

3.8.1 Conduct of Electrical Work

As delineated in EM 385-1-1 electrical work is to be conducted in a de-energized state unless there is no alternative method for accomplishing the work. In those cases an energized work permit shall be obtained from the contracting officer. The energized work permit application shall be accompanied by the AHA and a summary of why the equipment/circuit needs to be worked energized. Underground electrical spaces must be certified safe for entry before entering to conduct work. Cables that will be cut must be positively identified and de-energized prior to performing each cut. Attachment of temporary grounds shall be in accordance with ASTM F855 and IEEE 1048. Perform all high voltage cable cutting remotely using hydraulic cutting tool. When racking in or live switching of circuit breakers, no additional person other than the switch operator will be allowed in the space during the actual operation. Plan so that work near energized parts is minimized to the fullest extent possible. Use of electrical outages clear of any energized electrical sources is the preferred method. When working in energized substations, only qualified electrical workers shall be permitted to enter. When work requires Contractor to work near energized circuits as defined by the NFPA 70, high voltage personnel must use personal protective equipment that includes, as a minimum, electrical hard hat, safety shoes, insulating gloves and electrical arc flash protection for personnel as required by NFPA 70E. Insulating blankets, hearing protection, and switching suits may also be required, depending on the specific job and as delineated in the Contractor's AHA. Contractor shall ensure that each employee is familiar with and complies with these procedures and 29 CFR 1910.147.

3.8.2 Arc Flash Risk/Hazard Analysis

Contractor shall provide an Arc Flash Risk/Hazard Analysis in accordance with NFPA 70E for all locations where workers may be exposed to arc flash hazard (work on energized electrical equipment). The Arc Flash Risk/Hazard Analysis shall be sealed and signed by a qualified professional engineer.

In addition to Arc Flash Risk/Hazard Analysis required for safety during construction, provide an Arc Flash Risk/Hazard Analysis for the entire electrical distribution system as constructed. Provide equipment labels as required by NFPA 70E.

3.8.3 Arc Flash Risk/Hazard Analysis Qualifications

Contractor shall engage the services of a qualified organization to provide Arc Flash Risk/Hazard Analysis of the electrical distribution system. Organization shall be independent of the supplier, manufacturer, and installer of the equipment. The organization shall be a first tier subcontractor. This work shall not be performed by a second tier subcontractor.

a. Submit name and qualifications of organization. Organization shall have been regularly engaged in providing Arc Flash Risk/Hazard Analysis for a minimum of 5 years.

b. Submit name and qualifications of the professional engineer performing the analysis. Include a list of three comparable jobs performed by the engineer with specific names and telephone numbers for reference.

3.8.4 Contractor Electrical Energized Work Permit

All work on energized electrical systems must have an approved/signed Contractor Electrical Energized Work Permit. The results of the Arc Flash Risk/Hazard Analysis shall be included in the "Contractor Electrical Energized Work Permit" request. Flame-resistant (FR) clothing and personal protective equipment (PPE) shall be rated for a minimum of 8 calories per square centimeter even if the flash hazard analysis indicates a lower value. A blank copy of the permit request is attached. An editable version may be obtained from the Contracting Officer.

3.8.5 Portable Extension Cords

Size portable extension cords in accordance with manufacturer ratings for the tool to be powered and protected from damage. Immediately remove from service all damaged extension cords. Portable extension cords shall meet the requirements of EM 385-1-1, NFPA 70E and OSHA electrical standards.

3.9 WORK IN CONFINED SPACES

Comply with the requirements in Section 34 of USACE EM 385-1-1, OSHA 29 CFR 1910, OSHA 29 CFR 1910.146, OSHA Directive CPL 2.100 and OSHA 29 CFR 1926. Any potential for a hazard in the confined space requires a permit system to be used.

a. Entry Procedures. Prohibit entry into a confined space by personnel for any purpose, including hot work, until the qualified person has conducted appropriate tests to ensure the confined or enclosed space is safe for the work intended and that all potential hazards are

controlled or eliminated and documented. (See Section 34 of USACE EM 385-1-1 for entry procedures.) All hazards pertaining to the space shall be reviewed with each employee during review of the AHA.

b. Forced air ventilation is required for all confined space entry operations and the minimum air exchange requirements must be maintained to ensure exposure to any hazardous atmosphere is kept below its' action level.

c. Sewer wet wells require continuous atmosphere monitoring with audible alarm for toxic gas detection in addition to continuous forced air ventilation regardless of space classification.

-- End of Section --

THIS PAGE HAS BEEN INTENTIONALLY LEFT BLANK

SECTION 01 42 00

SOURCES FOR REFERENCE PUBLICATIONS
11/14

PART 1 GENERAL

1.1 REFERENCES

Various publications are referenced in other sections of the specifications to establish requirements for the work. These references are identified in each section by document number, date and title. The document number used in the citation is the number assigned by the standards producing organization (e.g. ASTM B564 Standard Specification for Nickel Alloy Forgings). However, when the standards producing organization has not assigned a number to a document, an identifying number has been assigned for reference purposes.

1.2 ORDERING INFORMATION

The addresses of the standards publishing organizations whose documents are referenced in other sections of these specifications are listed below, and if the source of the publications is different from the address of the sponsoring organization, that information is also provided.

ACOUSTICAL SOCIETY OF AMERICA (ASA)
1305 Walt Whitman Road, Suite 300
Melville, NY 11747-4300
Ph: 516-576-2360
Fax: 631-923-2875
E-mail: asa@aip.org
Internet: http://asa.aip.org

ALUMINUM ASSOCIATION (AA)
National Headquarters
1525 Wilson Boulevard, Suite 600
Arlington, VA 22209
Ph: 703-358-2960
E-Mail: info@aluminum.org
Internet: http://www.aluminum.org

AMERICAN ASSOCIATION OF STATE HIGHWAY AND TRANSPORTATION OFFICIALS (AASHTO)
444 North Capital Street, NW, Suite 249
Washington, DC 20001
Ph: 202-624-5800
Fax: 202-624-5806
E-Mail: info@aashto.org
Internet: http://www.aashto.org

AMERICAN BOILER MANUFACTURERS ASSOCIATION (ABMA/BOIL)
8221 Old Courthouse Road, Suite 202
Vienna, VA 22182
Ph: 703-356-7172
Internet: http://www.abma.com

AMERICAN CONCRETE INSTITUTE INTERNATIONAL (ACI)
38800 Country Club Drive
Farmington Hills, MI 48331-3439
Ph: 248-848-3700
Fax: 248-848-3701
E-mail: bkstore@concrete.org
Internet: http://www.concrete.org

AMERICAN CONFERENCE OF GOVERNMENTAL INDUSTRIAL HYGIENISTS (ACGIH)
1330 Kemper Meadow Drive
Cincinnati, OH 45240
Ph: 513-742-2020 or 513-742-6163
Fax: 513-742-3355
E-mail: mail@acgih.org
Internet: http://www.acgih.org

AMERICAN GAS ASSOCIATION (AGA)
400 North Capitol Street N.W.
Suite 450
Washington, D.C. 20001
Ph: 202-824-7000
Internet: http://www.aga.org

AMERICAN HARDBOARD ASSOCIATION (AHA)
1210 West Northwest Highway
Palatine, IL 60067
Ph: 847-934-8800
Fax: 847-934-8803
E-mail: aha@hardboard.org
Internet: http://domensino.com/AHA/

AMERICAN INDUSTRIAL HYGIENE ASSOCIATION (AIHA)
3141 Fairview Park Dr, Suite 777
Falls Church, VA 22042
Tel: 703-849-8888
Fax: 703-207-3561
E-mail: infonet@aiha.org
Internet http://www.aiha.org

AMERICAN INSTITUTE OF STEEL CONSTRUCTION (AISC)
One East Wacker Drive, Suite 700
Chicago, IL 60601-1802
Ph: 312-670-2400
Fax: 312-670-5403
Bookstore: 800-644-2400
E-mail: aisc@ware-pak.com
Internet: http://www.aisc.org

AMERICAN IRON AND STEEL INSTITUTE (AISI)
25 Massachusetts Avenue, NW Suite 800
Washington, DC 20001
Ph: 202-452-7100
Internet: http://www.steel.org

AMERICAN PETROLEUM INSTITUTE (API)
Internet: http://www.api.org

AMERICAN SOCIETY FOR NONDESTRUCTIVE TESTING (ASNT)
P.O. Box 28518

1711 Arlingate Lane
Columbus, OH 43228-0518
Ph: 800-222-2768; 614-274-6003
Fax: 614-274-6899
E-mail: tjones@asnt.org
Internet: http://www.asnt.org

AMERICAN SOCIETY OF CIVIL ENGINEERS (ASCE)
1801 Alexander Bell Drive
Reston, VA 20191
Ph: 703-295-6300; 800-548-2723
E-mail: member@asce.org
Internet: http://www.asce.org

AMERICAN SOCIETY OF HEATING, REFRIGERATING AND AIR-CONDITIONING ENGINEERS (ASHRAE)
1791 Tullie Circle, NE
Atlanta, GA 30329
Ph: 800-527-4723 or 404-636-8400
Fax: 404-321-5478
E-mail: ashrae@ashrae.org
Internet: http://www.ashrae.org

AMERICAN SOCIETY OF SAFETY ENGINEERS (ASSE/SAFE)
1800 East Oakton Street
Des Plaines, IL 60018
Ph: 847-699-2929
Internet: http://www.asse.org

AMERICAN SOCIETY OF SANITARY ENGINEERING (ASSE)
18927 Hickory Creek Drive, Suite 220
Mokena, IL 60448
Ph: 708-995-3019
Fax: 708-479-6139
E-mail: staffengineer@asse-plumbing.org
Internet: http://www.asse-plumbing.org

AMERICAN WATER WORKS ASSOCIATION (AWWA)
6666 West Quincy Avenue
Denver, CO 80235-3098
Ph: 303-794-7711
E-mail: distribution@awwa.org
Internet: http://www.awwa.org

AMERICAN WELDING SOCIETY (AWS)
13301 NW 47 Ave
Miami, FL 33054

Ph: 888-WELDING, 305-824-1177, 305-826-6192
Fax: 305-826-6195
E-mail: customer.service@awspubs.com
Internet: http://www.aws.org

AMERICAN WOOD PROTECTION ASSOCIATION (AWPA)
P.O. Box 361784
Birmingham, AL 35236-1784
Ph: 205-733-4077
Fax: 205-733-4075
Internet: http://www.awpa.com

ASME INTERNATIONAL (ASME)
Two Park Avenue, M/S 10E
New York, NY 10016-5990
Ph: 800-843-2763
Fax: 973-882-1717
E-mail: customercare@asme.org
Internet: http://www.asme.org

ASSOCIATED AIR BALANCE COUNCIL (AABC)
1518 K Street, NW
Washington, DC 20005
Ph: 202-737-0202
Fax: 202-638-4833
E-mail: info@aabc.com
Internet: http://www.aabc.com/

ASTM INTERNATIONAL (ASTM)
100 Barr Harbor Drive, P.O. Box C700
West Conshohocken, PA 19428-2959
Ph: 877-909-2786
Internet: http://www.astm.org

CONCRETE REINFORCING STEEL INSTITUTE (CRSI)
933 North Plum Grove Road
Schaumburg, IL 60173-4758
Ph: 847-517-1200
Fax: 847-517-1206
Internet: http://www.crsi.org/

FM GLOBAL (FM)
270 Central Avenue
P.O. Box 7500
Johnston, RI 02919-4923
Ph: 877-364-6726
Fax: 401-275-3029
E-mail: servicedesk.myrisk@fmglobal.com
Internet: http://www.fmglobal.com

GREEN SEAL (GS)
1001 Connecticut Avenue, NW
Suite 827
Washington, DC 20036-5525
Ph: 202-872-6400
Fax: 202-872-4324
Internet: http://www.greenseal.org

ILLUMINATING ENGINEERING SOCIETY (IES)
120 Wall Street, 17th Floor
New York, NY 10005-4001
Ph: 212-248-5000
Fax: 212-248-5018
E-mail: IES@IES.org
Internet: http://www.IES.org

INSTITUTE OF ELECTRICAL AND ELECTRONICS ENGINEERS (IEEE)
445 and 501 Hoes Lane
Piscataway, NJ 08854-4141
Ph: 732-981-0060 or 800-701-4333

Fax: 732-562-9667
E-mail: onlinesupport@ieee.org
Internet: http://www.ieee.org

INSULATED CABLE ENGINEERS ASSOCIATION (ICEA)
P.O. Box 1568
Carrollton, GA 30112
E-mail:
http://www.icea.net/Public_Pages/Contact/Email_Contact.html
Internet: http://www.icea.net

INTERNATIONAL CODE COUNCIL (ICC)
500 New Jersey Avenue, NW
6th Floor, Washington, DC 20001
Ph: 800-786-4452 or 888-422-7233
E-mail: order@iccsafe.org
Internet: www.iccsafe.org

INTERNATIONAL CONCRETE REPAIR INSTITUTE (ICRI)
10600 West Higgins Road, Suite 607
Rosemont, IL 60018
Ph: 847-827-0830
Fax: 847-827-0832
Internet: http://www.icri.org

INTERNATIONAL ELECTRICAL TESTING ASSOCIATION (NETA)
3050 Old Centre Ave. Suite 102
Portage, MI 49024
Ph: 269-488-6382
Internet: http://www.netaworld.org

INTERNATIONAL ELECTROTECHNICAL COMMISSION (IEC)
3, rue de Varembe
P.O. Box 131
CH-1211 Geneva 20, Switzerland
Ph: 41-22-919-02-11
Fax: 41-22-919-03-00
Internet: http://www.iec.ch

INTERNATIONAL ORGANIZATION FOR STANDARDIZATION (ISO)
1, ch. de la Voie-Creuse
Case Postale 56
CP 56 - CH-1211 Geneva 20
Switzerland
Ph: 41-22-749-01-11
Fax: 41-22-733-34-30
E-mail: central@iso.ch
Internet: http://www.iso.org

INTERNATIONAL SAFETY EQUIPMENT ASSOCIATION (ISEA)
1901 North Moore Street
Arlington, VA 22209-1762
Ph: 703-525-1695
Fax: 703-528-2148
Internet: http://www.safetyequipment.org/

MANUFACTURERS STANDARDIZATION SOCIETY OF THE VALVE AND FITTINGS INDUSTRY (MSS)
127 Park Street, NE

Vienna, VA 22180-4602
Ph: 703-281-6613
E-mail: info@mss-hq.com
Internet: http://mss-hq.org/Store/index.cfm

MASTER PAINTERS INSTITUTE (MPI)
2800 Ingleton Avenue
Burnaby, BC CANADA V5C 6G7
Ph: 1-888-674-8937
Fax: 1-888-211-8708
E-mail: info@paintinfo.com or techservices@mpi.net
Internet: http://www.mpi.net/

METAL BUILDING MANUFACTURERS ASSOCIATION (MBMA)
1300 Sumner Avenue
Cleveland, OH 44115-2851
Ph: 216-241-7333
Fax: 216-241-0105
E-mail: mbma@mbma.com
Internet: http://www.mbma.com

MIDWEST INSULATION CONTRACTORS ASSOCIATION (MICA)
16712 Elm Circle
Omaha, NE 68130
Ph: 800-747-6422
Fax: 402-330-9702
Internet: http://www.micainsulation.org

NACE INTERNATIONAL (NACE)
Houston, TX 77084-4906
Ph: 281-228-6223
Fax: 281-228-6300
E-mail: firstservice@nace.org
Internet: http://www.nace.org

NATIONAL ASSOCIATION OF ARCHITECTURAL METAL MANUFACTURERS (NAAMM)
800 Roosevelt Road, Bldg C, Suite 312
Glen Ellyn, IL 60137
Ph: 630-942-6591
Fax: 630-790-3095
E-mail: wlewis7@cox.net(Wes Lewis,technical consultant)
Internet: http://www.naamm.org

NATIONAL ELECTRICAL CONTRACTORS ASSOCIATION (NECA)
3 Bethesda Metro Center, Suite 1100
Bethesda, MD 20814
Ph: 301-657-3110
Fax: 301-215-4500
Internet: http://www.necanet.org/

NATIONAL ELECTRICAL MANUFACTURERS ASSOCIATION (NEMA)
1300 North 17th Street, Suite 900
Arlington, VA 22209
Ph: 703-841-3200
Internet: http://www.nema.org/

NATIONAL ENVIRONMENTAL BALANCING BUREAU (NEBB)
8575 Grovemont Circle
Gaithersburg, MD 20877

Ph: 301-977-3698
Fax: 301-977-9589
Internet: http://www.nebb.org

NATIONAL FIRE PROTECTION ASSOCIATION (NFPA)
1 Batterymarch Park
Quincy, MA 02169-7471
Ph: 617-770-3000
Fax: 617-770-0700
Internet: http://www.nfpa.org

NATIONAL INSTITUTE OF STANDARDS AND TECHNOLOGY (NIST)
100 Bureau Drive
Stop 1070
Gaithersburg, MD 20899-1070
Ph: 301-975-NIST (6478)
E-mail: inquiries@nist.gov
Internet: http://www.nist.gov

NATIONAL ROOFING CONTRACTORS ASSOCIATION (NRCA)
10255 West Higgins Road, Suite 600
Rosemont, IL 60018-5607
Ph: 866-275-6722 (866-ASK-NRCA)
Fax: 847-299-1183
E-mail: info@nrca.net
Internet: http://www.nrca.net

SCIENTIFIC CERTIFICATION SYSTEMS (SCS)
2000 Powell Street, Suite 600
Emeryville, CA 94608
Ph: 800-326-3228
E-mail: info@SCSglobal services.com
Internet: http://www.scsglobalservices.com/

SHEET METAL AND AIR CONDITIONING CONTRACTORS' NATIONAL ASSOCIATION (SMACNA)
4201 Lafayette Center Drive
Chantilly, VA 20151-1219
Ph: 703-803-2980
Fax: 703-803-3732
Internet: http://www.smacna.org

SOCIETY FOR PROTECTIVE COATINGS (SSPC)
40 24th Street, 6th Floor
Pittsburgh, PA 15222
Ph: 412-281-2331
Fax: 412-281-9992
E-mail: info@sspc.org
Internet: http://www.sspc.org

SOCIETY OF AUTOMOTIVE ENGINEERS INTERNATIONAL (SAE)
400 Commonwealth Drive
Warrendale, PA 15096
Ph: 724-776-4970
Fax: 877-606-7323
E-mail: customerservice@sae.org
Internet: http://www.sae.org

SOCIETY OF CABLE TELECOMMUNICATIONS ENGINEERS (SCTE)
140 Philips Road
Exton, PA 19341-1318
Ph: 800-542-5040 or 610-363-6888
Fax: 610-363-5898
E-Mail: information@scte.org
http://www.scte.org

TELECOMMUNICATIONS INDUSTRY ASSOCIATION (TIA)
1320 N. Courthouse Rd., Suite 200
Arlington, VA 22201
Ph: 703-907-7700
Fax: 703-907-7727
Internet: http://www.tiaonline.org

THE MASONRY SOCIETY (TMS)
105 South Sunset Street, Suite Q
Longmont, CO 80501-9215
Ph: 303-939-9700
Fax: 303-541-9215
E-mail: info@masonrysociety.org
http://www.masonrysociety.org

TURFGRASS PRODUCERS INTERNATIONAL (TPI)
2 East Main Street
East Dundee, IL 60118
Ph: 847-649-5555
Fax: 847-649-5678
E-mail: info@turfgrasssod.org
Internet: http://www.turfgrasssod.org

U.S. ARMY CORPS OF ENGINEERS (USACE)
CRD-C DOCUMENTS available on Internet:
http://www.wbdg.org/ccb/browse_cat.php?c=68
Order Other Documents from:
USACE Publications Depot
Attn: CEHEC-IM-PD
2803 52nd Avenue
Hyattsville, MD 20781-1102
Ph: 301-394-0081
Fax: 301-394-0084
E-mail: pubs-army@usace.army.mil
Internet: http://www.publications.usace.army.mil/
or
http://www.hnc.usace.army.mil/Missions/Engineering/TECHINFO.aspx

U.S. DEFENSE LOGISTICS AGENCY (DLA)

Fort Belvoir, VA

Internet: http://www.dla.mil

U.S. DEPARTMENT OF AGRICULTURE (USDA)
Order AMS Publications from:
AGRICULTURAL MARKETING SERVICE (AMS)
Seed Regulatory and Testing Branch
801 Summit Crossing Place, Suite C
Gastonia, NC 28054-2193
Ph: 704-810-8871

Fax: 704-852-4189
E-mail: seed.ams@usda.gov
Internet: http://www.ams.usda.gov/lsg/seed.htm
Order Other Publications from:
U.S. Department of Agriculture, Rural Utilities Program
USDA Rural Development, Room 4051-S
Mail Stop 1510
1400 Independence Avenue SW
Washington, DC 20250-1510
Phone: (202) 720-9540
TTY: (800) 877-8339 (Federal Relay Service)
Fax: (202) 720-1725
Internet: http://www.rurdev.usda.gov/utilities_lp.html

U.S. DEPARTMENT OF DEFENSE (DOD)
Order DOD Documents from:
Room 3A750-The Pentagon
1400 Defense Pentagon
Washington, DC 20301-1400
Ph: 703-571-3343
FAX: 215-697-1462
E-mail: customerservice@ntis.gov
Internet: http://www.ntis.gov
Obtain Military Specifications, Standards and Related Publications from:
Acquisition Streamlining and Standardization Information System (ASSIST)
Department of Defense Single Stock Point (DODSSP)
Document Automation and Production Service (DAPS)
Building 4/D
700 Robbins Avenue
Philadelphia, PA 19111-5094
Ph: 215-697-6396 - for account/password issues
Internet: http://assist.daps.dla.mil/online/start/; account registration required
Obtain Unified Facilities Criteria (UFC) from:
Whole Building Design Guide (WBDG)
National Institute of Building Sciences (NIBS)
1090 Vermont Avenue NW, Suite 700
Washington, CD 20005
Ph: 202-289-7800
Fax: 202-289-1092
Internet: http://www.wbdg.org/references/docs_refs.php

U.S. DEPARTMENT OF HOUSING AND URBAN DEVELOPMENT (HUD)
HUD User
P.O. Box 23268
Washington, DC 20026-3268
Ph: 800-245-2691 or 202-708-3178
TDD: 800-927-7589
Fax: 202-708-9981
Internet: http://www.huduser.org

U.S. ENVIRONMENTAL PROTECTION AGENCY (EPA)
Ariel Rios Building
1200 Pennsylvania Avenue, N.W.
Washington, DC 20004
Ph: 202-272-0167
Internet: http://www2.epa.gov/libraries

--- Some EPA documents are available only from:
National Technical Information Service (NTIS)
5301 Shawnee Road
Alexandria, VA 22312
Ph: 703-605-6050 or 1-688-584-8332
Fax: 703-605-6900
E-mail: info@ntis.gov
Internet: http://www.ntis.gov

U.S. FEDERAL HIGHWAY ADMINISTRATION (FHWA)
FHWA, Office of Safety
1200 New Jersey Ave., SE
Washington, DC 20590
Ph: 202-366-4000
Internet: http://www.fhwa.dot.gov
Order from:
Superintendent of Documents
U. S. Government Printing Office (GPO)
710 North Capitol Street, NW
Washington, DC 20401
Ph: 202-512-1800
Fax: 202-512-2104
E-mail: contactcenter@gpo.gov
Internet: http://www.gpoaccess.gov

U.S. GENERAL SERVICES ADMINISTRATION (GSA)
General Services Administration
1275 First St. NE
Washington, DC 20417
Ph: 202-501-1231
Internet: http://www.gsaelibrary.gsa.gov/ElibMain/home.do
Obtain documents from:
Acquisition Streamlining and Standardization Information System (ASSIST)
Internet: https://assist.dla.mil/online/start/; account registration required

U. S. GREEN BUILDING COUNCIL (USGBC)
2101 L St NW, Suite 500
Washington, D.C. 20037
Ph: 800-795-1747
Internet: http://www.usgbc.org

U.S. NATIONAL ARCHIVES AND RECORDS ADMINISTRATION (NARA)
8601 Adelphi Road
College Park, MD 20740-6001
Ph: 866-272-6272
Fax: 301-837-0483
Internet: http://www.archives.gov
Order documents from:
Superintendent of Documents
U.S.Government Printing Office (GPO)
710 North Capitol Street, NW
Washington, DC 20401
Ph: 202-512-1800
Fax: 202-512-2104
E-mail: contactcenter@gpo.gov
Internet: http://www.gpoaccess.gov

U.S. NAVAL FACILITIES ENGINEERING COMMAND (NAVFAC)
1322 Patterson Ave. SE, Suite 1000
Washington Navy Yard, DC 20374-5065
Ph: 202-685-9387
Internet: http://www.navfac.navy.mil

UNDERWRITERS LABORATORIES (UL)
2600 N.W. Lake Road
Camas, WA 98607-8542
Ph: 877-854-3577
E-mail: CEC.us@us.ul.com
Internet: http://www.ul.com/
UL Directories available through IHS at http://www.ihs.com

PART 2 PRODUCTS

Not used

PART 3 EXECUTION

Not used

-- End of Section --

CONTRACTOR ELECTRICAL ENERGIZED WORK PERMIT

PART I: TO BE COMPLETED BY THE REQUESTER: CONTRACT NUMBER: _____

JO/DO NUMBER_____ DATE OF REQUEST: _____

ANTICIPATED DATE WORK IS TO BE PERFORMED: _____.

(1) Description of circuit/equipment/job location:_____

_____

(2) Description of work to be done: _____

_____

(3) Justification of why the circuit/equipment cannot be de-energized or the work deferred until the next scheduled outage:

_____

_____

NOTE: ATTACHED COPY OF OUTAGE REQUESTS INCLUDING REASONS FOR DENIAL

_____ _____

Requester/Title Date

PART II: TO BE COMPLETED BY THE ELECTRICALLY QUALIFIED PERSONS DOING THE WORK:

	Check when Complete
(1) Detailed job description procedure to be used in performing the above detailed work: _____	☐
(2) Description of the Safe Work Practices to be employed: _____	☐
(3) Results of the Shock Hazard Analysis: _____	☐
(4) Determination of the Shock Protection Boundaries: _____	☐
(5) Results of the Arc Flash Hazard Analysis: _____	☐
Determination of the Arc Flash Protection Boundary: _____	☐
(6) Necessary personnel protective equipment to safely perform the assigned task:_____	☐
(7) Means employed to restrict the access of unqualified persons from the work area:_____	☐
(8) Evidence of completion of a Job Briefing including discussion of any job – related hazards:_____	☐

(10) Do you agree the above described work can be done safely? ☐ Yes ☐ No (If no, return to requester)

PART III: RECOMMEND APPROVAL(S) TO PERFORM THE WORK WHILE ELECTRICALLY ENERGIZED:

_____ _____ _____

OICC SIGNATURE **CI SIGNATURE** **OPS SIGNATURE**

_____

NAVFAC MIDLANT CONTRUCTION SAFETY MANAGER

PART IV: FINAL APPROVAL:

_____

NAVFAC MILANT COMMANDING OFFICER

NOTE: COMPLETED FORM WILL BE KEPT ON FILE BY MIDLANT CONSTRUCTION SAFETY MANAGER

CONTRACTOR ELECTRICAL ENERGIZED WORK PERMIT

1. Detailed job description procedure to be used in performing the above detailed work:

2. Description of the Safe Work Practices to be employed

THIS PAGE HAS BEEN INTENTIONALLY LEFT BLANK

SECTION 01 45 00.00 20

QUALITY CONTROL
09/15

PART 1 GENERAL

1.1 REFERENCES

The publications listed below form a part of this specification to the extent referenced. The publications are referred to in the text by the basic designation only.

AMERICAN SOCIETY OF HEATING, REFRIGERATING AND AIR-CONDITIONING ENGINEERS (ASHRAE)

ASHRAE 52.2	(2012; Errata 2013; INT 1 2014; ADD A, B, AND D SUPP 2015; INT 3 2015) Method of Testing General Ventilation Air-Cleaning Devices for Removal Efficiency by Particle Size

ASTM INTERNATIONAL (ASTM)

ASTM D6245	(2012) Using Indoor Carbon Dioxide Concentrations to Evaluate Indoor Air Quality and Ventilation
ASTM D6345	(2010) Selection of Methods for Active, Integrative Sampling of Volatile Organic Compounds in Air

INTERNATIONAL CODE COUNCIL (ICC)

ICC IBC	(2012) International Building Code

SHEET METAL AND AIR CONDITIONING CONTRACTORS' NATIONAL ASSOCIATION (SMACNA)

ANSI/SMACNA 008	(2007) IAQ Guidelines for Occupied Buildings Under Construction, 2nd Edition

U.S. ARMY CORPS OF ENGINEERS (USACE)

EM 385-1-1	(2014) Safety and Health Requirements Manual

U.S. GREEN BUILDING COUNCIL (USGBC)

LEED GBDC Ref Guide	(2009; R 2010) LEED Reference Guide for Green Building Design, Construction and Major Renovations of Commercial and Institutional Buildings including Core & Shell and K-12 Projects

1.2 SUBMITTALS

Government approval is required for submittals with a "G" designation;

submittals not having a "G" designation are for Contractor Quality Control approval. Submit the following in accordance with Section 01 33 00 SUBMITTAL PROCEDURES:

SD-01 Preconstruction Submittals

Construction Quality Control (QC) Plan; G. Submit prior to start of construction.
Indoor Air Quality (IAQ) Management Plan; G
Basis of Design and Design Intent

SD-06 Test Reports

Acceptance Testing of Critical Systems Checklist; G

SD-07 Certificates

ICC IBC Special Inspections Certification; G
CA Resume

1.3 INFORMATION FOR THE CONTRACTING OFFICER

Prior to commencing work on construction, the Contractor can obtain a single copy set of the current report forms from the Contracting Officer. The report forms will consist of the Contractor Production Report, Contractor Production Report (Continuation Sheet), Contractor Quality Control (CQC) Report, (CQC) Report (Continuation Sheet), Preparatory Phase Checklist, Initial Phase Checklist, Rework Items List, and Testing Plan and Log.

Deliver the following to the Contracting Officer during Construction:

a. CQC Report: Mail or hand-carry the original (wet signatures) and one copy by 10:00 AM the next working day after each day that work is performed and for every seven consecutive calendar days of no-work.

b. Contractor Production Report: Mail or hand-carry the original (wet signatures) and one copy by 10:00 AM the next working day after each day that work is performed and for every seven consecutive calendar days of no-work, attached to the CQC Report.

c. Preparatory Phase Checklist: Original attached to the original CQC Report and one copy attached to each QC Report copy.

d. Initial Phase Checklist: Original attached to the original CQC Report and one copy attached to each QC Report copy.

f. Field Test Reports: Mail or hand-carry the original within two working days after the test is performed, attached to the original CQC Report and one copy attached to each QC Report copy.

g. Monthly Summary Report of Tests: Mail or hand-carry the original attached to the last QC Report of the month.

h. Testing Plan and Log: Mail or hand-carry the original attached to the last CQC Report of each month and one copy attached to each CQC Report copy. A copy of the final Testing Plan and Log shall be provided to the OMSI preparer for inclusion into the OMSI documentation.

i. Rework Items List: Mail or hand-carry the original attached to the last CQC Report of each month and one copy attached to each CQC Report copy.

j. CQC Meeting Minutes: Mail or hand-carry the original within two working days after the meeting is held, attached to the original CQC Report and one copy attached to each CQC Report copy.

k. QC Certifications: As required by the paragraph entitled "QC Certifications."

1.4 QC PROGRAM REQUIREMENTS

Establish and maintain a QC program as described in this section. This QC program is a key element in meeting the objectives of NAVFAC Commissioning. The QC program consists of a QC Organization, QC Plan, QC Plan Meeting(s), a Coordination and Mutual Understanding Meeting, QC meetings, three phases of control, submittal review and approval, testing, completion inspections, and QC certifications and documentation necessary to provide materials, equipment, workmanship, fabrication, construction and operations which comply with the requirements of this Contract. The QC program must cover on-site and off-site work and be keyed to the work sequence. No construction work or testing may be performed unless the QC Manager is on the work site. The QC Manager must report to an officer of the firm and not be subordinate to the Project Superintendent or the Project Manager. The QC Manager, Project Superintendent and Project Manager must work together effectively. Although the QC Manager is the primary individual responsible for quality control, all individuals will be held responsible for the quality of work on the job.

1.4.1 Commissioning

Commissioning (Cx) is a systematic process of ensuring that all building systems meet the requirements and perform interactively according to the Contract. The QC Program is a key to this process by coordinating, verifying and documenting measures to achieve the following objectives:

a. Commissioning Plan (Prepared by the CxA): Verify that the Plan includes systems to be tested, test to be performed, testing schedule, and action plan for issues resolution.

b. Verify and document that the applicable equipment and systems are installed in accordance with the design intent as expressed through the Contract and according to the manufacturer's recommendations and industry accepted minimum standards.

c. Verify and document that equipment and systems receive complete operational checkout by the installing contractors.

d. Verify and document proper performance of equipment and systems.

e. Verify that Operation and Maintenance (O&M) documentation is complete.

f. Verify the Training Plan and training materials are accurate and provide correct instruction and documentation on the critical elements of the products, materials, and systems in the constructed facility. Verify that all identified Government operating personnel are trained.

g. Provide acceptance testing for critical systems as identified by

NAVFAC Engineering & Construction Bulletin ECB issue 2008-03 dated 9/25/2008, attached. Provide the requirements identified under the "Ktr" column for all applicable project elements. The requirements identified are minimum requirements and do not reduce the requirements contained in the technical sections. Provide Acceptance Testing of Critical Systems Checklist showing compliance for all applicable elements for approval by the Contracting Officer.

1.4.2 Acceptance of the Construction Quality Control (QC) Plan

Acceptance of the QC Plan is required prior to the start of construction. The Contracting Officer reserves the right to require changes in the QC Plan and operations as necessary, including removal of personnel, to ensure the specified quality of work. The Contracting Officer reserves the right to interview any member of the QC organization at any time in order to verify the submitted qualifications. All QC organization personnel are subject to acceptance by the Contracting Officer. The Contracting Officer may require the removal of any individual for non-compliance with quality requirements specified in the Contract.

1.4.3 Preliminary Construction Work Authorized Prior to Acceptance

The only construction work that is authorized to proceed prior to the acceptance of the QC Plan is mobilization of storage and office trailers, temporary utilities, and surveying.

1.4.4 Notification of Changes

Notify the Contracting Officer, in writing, of any proposed changes in the QC Plan or changes to the QC organization personnel, a minimum of 10 work days prior to a proposed change. Proposed changes are subject to acceptance by the Contracting Officer.

1.5 QC ORGANIZATION

1.5.1 QC Manager

1.5.1.1 Duties

Provide a QC Manager at the work site to implement and manage the QC program. The QC Manager is required to attend the partnering meetings, QC Plan Meetings, Coordination and Mutual Understanding Meeting, conduct the QC meetings, perform the three phases of control , perform submittal review and approval, ensure testing is performed and provide QC certifications and documentation required in this Contract. The QC Manager is responsible for managing and coordinating the three phases of control and documentation performed by testing laboratory personnel and any other inspection and testing personnel required by this Contract. The QC Manager is the manager of all QC activities.

1.5.1.2 Qualifications

An individual with a minimum of 10 years combined experience in the following positions: Project Superintendent, QC Manager, Project Manager, Project Engineer or Construction Manager on similar size and type construction contracts which included the major trades that are part of this Contract. The individual must have at least two years experience as a QC Manager. The individual must be familiar with the requirements of EM 385-1-1, and have experience in the areas of hazard identification,

safety compliance, and sustainability.

1.5.2 Construction Quality Management Training

In addition to the above experience and education requirements, the QC Manager must have completed the course entitled "Construction Quality Management (CQM) for Contractors." If the QC Manager does not have a current certification, they must obtain the CQM for Contractors course certification within 90 days of award. This course is periodically offered by the Naval Facilities Engineering Command and the Army Corps of Engineers. Contact the Contracting Officer for information on the next scheduled class.

1.5.3 Alternate QC Manager Duties and Qualifications

Designate an alternate for the QC Manager at the work site to serve in the event of the designated QC Manager's absence. The period of absence may not exceed two weeks at one time, and not more than 30 workdays during a calendar year. The qualification requirements for the Alternate QC Manager must be the same as for the QC Manager.

1.6 QUALITY CONTROL (QC) PLAN

1.6.1 Construction Quality Control (QC) Plan

1.6.1.1 Requirements

Provide, for acceptance by the Contracting Officer, a Construction QC Plan submitted in a three-ring binder that includes a table of contents, with major sections identified with tabs, with pages numbered sequentially, and that documents the proposed methods and responsibilities for accomplishing commissioning activities during the construction of the project:

a. QC ORGANIZATION: A chart showing the QC organizational structure.

b. NAMES AND QUALIFICATIONS: Names and qualifications, in resume format, for each person in the QC organization. Include the CQM for Contractors course certifications for the QC Manager and Alternate QC Manager as required by the paragraphs entitled "Construction Quality Management Training" and "Alternate QC Manager Duties and Qualifications".

c. DUTIES, RESPONSIBILITY AND AUTHORITY OF QC PERSONNEL: Duties, responsibilities, and authorities of each person in the QC organization.

d. OUTSIDE ORGANIZATIONS: A listing of outside organizations, such as architectural and consulting engineering firms, that will be employed by the Contractor and a description of the services these firms will provide.

e. APPOINTMENT LETTERS: Letters signed by an officer of the firm appointing the QC Manager and Alternate QC Manager and stating that they are responsible for implementing and managing the QC program as described in this Contract. Include in this letter the responsibility of the QC Manager and Alternate QC Manager to implement and manage the three phases of control, and their authority to stop work which is not in compliance with the Contract. Letters of direction are to be issued by the QC Manager to all other QC Specialists outlining their

duties, authorities, and responsibilities. Include copies of the letters in the QC Plan.

f. SUBMITTAL PROCEDURES AND INITIAL SUBMITTAL REGISTER: Procedures for reviewing, approving, and managing submittals. Provide the name(s) of the person(s) in the QC organization authorized to review and certify submittals prior to approval. Provide the initial submittal of the Submittal Register as specified in Section 01 33 00 SUBMITTAL PROCEDURES.

g. TESTING LABORATORY INFORMATION: Testing laboratory information required by the paragraphs entitled "Accreditation Requirements", as applicable.

h. TESTING PLAN AND LOG: A Testing Plan and Log that includes the tests required, referenced by the specification paragraph number requiring the test, the frequency, and the person responsible for each test. Use Government forms to log and track tests.

i. PROCEDURES TO COMPLETE REWORK ITEMS: Procedures to identify, record, track, and complete rework items. Use Government forms to record and track rework items.

j. DOCUMENTATION PROCEDURES: Use Government form.

k. LIST OF DEFINABLE FEATURES: A Definable Feature of Work (DFOW) is a task that is separate and distinct from other tasks and has control requirements and work crews unique to that task. A DFOW is identified by different trades or disciplines and is an item or activity on the construction schedule. Include in the list of DFOWs, but not be limited to, all critical path activities on the NAS. Include all activities for which this specification requires QC Specialists or specialty inspection personnel. Provide separate DFOWs in the Network Analysis Schedule for each design development stage and submittal package.

l. PROCEDURES FOR PERFORMING THE THREE PHASES OF CONTROL: Identify procedures used to ensure the three phases of control to manage the quality on this project. For each DFOW, a Preparatory and Initial phase checklist will be filled out during the Preparatory and Initial phase meetings. Conduct the Preparatory and Initial Phases and meetings with a view towards obtaining quality construction by planning ahead and identifying potential problems for each DFOW.

m. PERSONNEL MATRIX: Not Applicable.

n. PROCEDURES FOR COMPLETION INSPECTION: Not Applicable.

o. TRAINING PROCEDURES AND TRAINING LOG: Procedures for coordinating and documenting the training of personnel required by the Contract.

p. ORGANIZATION AND PERSONNEL CERTIFICATIONS LOG: Procedures for coordinating, tracking and documenting all certifications on subcontractors, testing laboratories, suppliers, personnel, etc. QC Manager will ensure that certifications are current, appropriate for the work being performed, and will not lapse during any period of the contract that the work is being performed.

1.7 QC PLAN MEETINGS

Prior to submission of the QC Plan, the QC Manager will meet with the Contracting Officer to discuss the QC Plan requirements of this Contract. The purpose of this meeting is to develop a mutual understanding of the QC Plan requirements prior to plan development and submission and to agree on the Contractor's list of DFOWs.

1.8 COORDINATION AND MUTUAL UNDERSTANDING MEETING

After submission of the QC Plan, and prior to the start of construction, the QC Manager will meet with the Contracting Officer to present the QC program required by this Contract. When a new QC Manager is appointed, the coordination and mutual understanding meeting shall be repeated.

1.8.1 Purpose

The purpose of this meeting is to develop a mutual understanding of the QC details, including documentation, administration for on-site and off-site work, design intent, Cx, environmental requirements and procedures, coordination of activities to be performed, and the coordination of the Contractor's management, production, and QC personnel. At the meeting, the Contractor will be required to explain in detail how three phases of control will be implemented for each DFOW, as well as how each DFOW will be affected by each management plan or requirement as listed below:

a. Waste Management Plan.

b. IAQ Management Plan.

c. Procedures for noise and acoustics management.

d. Environmental Protection Plan.

e. Environmental regulatory requirements.

f. Cx Plan.

1.8.2 Coordination of Activities

Coordinate activities included in various sections to assure efficient and orderly installation of each component. Coordinate operations included under different sections that are dependent on each other for proper installation and operation. Schedule construction operations with consideration for indoor air quality as specified in the IAQ Management Plan. Coordinate prefunctional tests and startup testing with Cx.

1.8.3 Attendees

As a minimum, the Contractor's personnel required to attend include an officer of the firm, the Project Manager, Project Superintendent, QC Manager, Alternate QC Manager, A/E, CA, Environmental Manager, and subcontractor representatives. Each subcontractor who will be assigned QC responsibilities shall have a principal of the firm at the meeting. Minutes of the meeting will be prepared by the QC Manager and signed by the Contractor and the Contracting Officer. Provide a copy of the signed minutes to all attendees.

1.9 QC MEETINGS

After the start of construction, conduct QC meetings once every two weeks by the QC Manager at the work site with the Project Superintendent, the CA, and the foremen who are performing the work of the DFOWs. The QC Manager is to prepare the minutes of the meeting and provide a copy to the Contracting Officer within two working days after the meeting. The Contracting Officer may attend these meetings. As a minimum, accomplish the following at each meeting:

a. Review the minutes of the previous meeting.

b. Review the schedule and the status of work and rework.

c. Review the status of submittals.

d. Review the work to be accomplished in the next two weeks and documentation required.

e. Resolve QC and production problems (RFI, etc.).

f. Address items that may require revising the QC Plan.

g. Review Accident Prevention Plan (APP).

h. Review environmental requirements and procedures.

i. Review Waste Management Plan.

j. Review IAQ Management Plan.

k. Review Environmental Management Plan.

l. Review the status of training completion.

m. Review Cx Plan and progress.

1.10 DESIGN REVIEW AND DOCUMENTATION

1.10.1 Basis of Design and Design Intent

Review the basis of design received from the Contracting Officer.

1.10.2 Contract Document Review

Review the Contract documents to verify that Cx is adequately specified, and that each commissioned system is likely to meet the design intent relative to functionality, energy performance, water performance, maintainability, sustainability, system cost, indoor environmental quality, and local environmental impacts.

1.11 THREE PHASES OF CONTROL

Adequately cover both on-site and off-site work with the Three Phases of Control and include the following for each DFOW.

1.11.1 Preparatory Phase

Notify the Contracting Officer at least two work days in advance of each

preparatory phase meeting. The meeting will be conducted by the QC Manager and attended by the Project Superintendent, the CA, and the foreman responsible for the DFOW. When the DFOW will be accomplished by a subcontractor, that subcontractor's foreman shall attend the preparatory phase meeting. Document the results of the preparatory phase actions in the Preparatory Phase Checklist. Perform the following prior to beginning work on each DFOW:

a. Review each paragraph of the applicable specification sections.

b. Review the Contract drawings.

c. Verify that field measurements are as indicated on construction and/or shop drawings before confirming product orders, in order to minimize waste due to excessive materials.

d. Verify that appropriate shop drawings and submittals for materials and equipment have been submitted and approved. Verify receipt of approved factory test results, when required.

e. Review the testing plan and ensure that provisions have been made to provide the required QC testing.

f. Examine the work area to ensure that the required preliminary work has been completed.

g. Coordinate the schedule of product delivery to designated prepared areas in order to minimize site storage time and potential damage to stored materials.

h. Arrange for the return of shipping/packaging materials, such as wood pallets, where economically feasible.

i. Examine the required materials, equipment and sample work to ensure that they are on hand and conform to the approved shop drawings and submitted data.

j. Discuss specific controls used and construction methods, construction tolerances, workmanship standards, and the approach that will be used to provide quality construction by planning ahead and identifying potential problems for each DFOW.

k. Review the APP and appropriate Activity Hazard Analysis (AHA) to ensure that applicable safety requirements are met, and that required Material Safety Data Sheets (MSDS) are submitted.

l. Review the Cx Plan and ensure all preliminary work items have been completed and documented.

1.11.2 Initial Phase

Notify the Contracting Officer at least two work days in advance of each initial phase. When construction crews are ready to start work on a DFOW, conduct the initial phase with the Project Superintendent, and the foreman responsible for that DFOW. Observe the initial segment of the DFOW to ensure that the work complies with Contract requirements. Document the results of the initial phase in the Initial Phase Checklist. Repeat the initial phase for each new crew to work on-site, or when acceptable levels of specified quality are not being met. Perform the following for each

DFOW:

a. Establish the quality of workmanship required.

b. Resolve conflicts.

c. Ensure that testing is performed by the approved laboratory.

d. Check work procedures for compliance with the APP and the appropriate AHA to ensure that applicable safety requirements are met.

e. Review the Cx Plan and ensure all preparatory work items have been completed and documented.

1.11.3 Follow-Up Phase

Perform the following for on-going work daily, or more frequently as necessary, until the completion of each DFOW and document in the daily CQC Report:

a. Ensure the work is in compliance with Contract requirements.

b. Maintain the quality of workmanship required.

c. Ensure that testing is performed by the approved laboratory.

d. Ensure that rework items are being corrected.

e. Assure manufacturers representatives have performed necessary inspections if required and perform safety inspections.

f. Review the Cx Plan and ensure all work items, testing, and documentation has been completed.

1.11.4 Additional Preparatory and Initial Phases

Conduct additional preparatory and initial phases on the same DFOW if the quality of on-going work is unacceptable, if there are changes in the applicable QC organization, if there are changes in the on-site production supervision or work crew, if work on a DFOW is resumed after substantial period of inactivity, or if other problems develop.

1.11.5 Notification of Three Phases of Control for Off-Site Work

Notify the Contracting Officer at least two weeks prior to the start of the preparatory and initial phases.

1.12 SUBMITTAL REVIEW AND APPROVAL

Procedures for submission, review and approval of submittals are described in Section 01 33 00 SUBMITTAL PROCEDURES.

1.13 TESTING

Except as stated otherwise in the specification sections, perform sampling and testing required under this Contract.

1.13.1 Accreditation Requirements

Construction materials testing laboratories must be accredited by a laboratory accreditation authority and will be required to submit a copy of the Certificate of Accreditation and Scope of Accreditation. The laboratory's scope of accreditation must include the appropriate ASTM standards (E 329, C 1077, D 3666, D 3740, A 880, E 543) listed in the technical sections of the specifications. Laboratories engaged in Hazardous Materials Testing shall meet the requirements of OSHA and EPA. The policy applies to the specific laboratory performing the actual testing, not just the Corporate Office.

1.13.2 Laboratory Accreditation Authorities

Laboratory Accreditation Authorities include the National Voluntary Laboratory Accreditation Program (NVLAP) administered by the National Institute of Standards and Technology at http://ts.nist.gov/ts/htdocs/210/214/214.htm , the American Association of State Highway and Transportation Officials (AASHTO) program at http://www.transportation.org/aashto/home.nsf/frontpage , International Accreditation Services, Inc. (IAS) at http://www.iasonline.org, U. S. Army Corps of Engineers Materials Testing Center (MTC)at http://www.wes.army.mil/SL/MTC/, the American Association for Laboratory Accreditation (A2LA) program at http://www.a2la.org/, the Washington Association of Building Officials (WABO) at http://www.wabo.org/ (Approval authority for WABO is limited to projects within Washington State), and the Washington Area Council of Engineering Laboratories (WACEL) at http://www.wacel.org/labaccred.html (Approval authority by WACEL is limited to projects within Facilities Engineering Command (FEC) Washington geographical area).

1.13.3 Capability Check

The Contracting Officer retains the right to check laboratory equipment in the proposed laboratory and the laboratory technician's testing procedures, techniques, and other items pertinent to testing, for compliance with the standards set forth in this Contract.

1.13.4 Test Results

Cite applicable Contract requirements, tests or analytical procedures used. Provide actual results and include a statement that the item tested or analyzed conforms or fails to conform to specified requirements. If the item fails to conform, notify the Contracting Officer immediately. Conspicuously stamp the cover sheet for each report in large red letters "CONFORMS" or "DOES NOT CONFORM" to the specification requirements, whichever is applicable. Test results must be signed by a testing laboratory representative authorized to sign certified test reports. Furnish the signed reports, certifications, and other documentation to the Contracting Officer via the QC Manager. Furnish a summary report of field tests at the end of each month, per the paragraph entitled "INFORMATION FOR THE CONTRACTING OFFICER".

1.13.5 Test Reports and Monthly Summary Report of Tests

Furnish the signed reports, certifications, and a summary report of field tests at the end of each month to the Contracting Officer. Attach a copy of the summary report to the last daily Contractor Quality Control Report of each month. Provide a copy of the signed test reports and

certifications to the OMSI preparer for inclusion into the OMSI documentation.

1.14 QC CERTIFICATIONS

1.14.1 CQC Report Certification

Contain the following statement within the CQC Report: "On behalf of the Contractor, I certify that this report is complete and correct and equipment and material used and work performed during this reporting period is in compliance with the contract drawings and specifications to the best of my knowledge, except as noted in this report."

1.14.2 Invoice Certification

Furnish a certificate to the Contracting Officer with each payment request, signed by the QC Manager, attesting that as-built drawings are current, coordinated and attesting that the work for which payment is requested, including stored material, is in compliance with Contract requirements.

1.14.3 Completion Certification

Upon completion of work under this Contract, the QC Manager shall furnish a certificate to the Contracting Officer attesting that "the work has been completed, inspected, tested and is in compliance with the Contract." Provide a copy of this final QC Certification for completion to the OMSI preparer for inclusion into the OMSI documentation.

1.15 COMPLETION INSPECTIONS

1.15.1 Punch-Out Inspection

Near the completion of all work or any increment thereof, established by a completion time stated in the Contract Clause entitled "Commencement, Prosecution, and Completion of Work," or stated elsewhere in the specifications, the QC Manager and the CA must conduct an inspection of the work and develop a "punch list" of items which do not conform to the approved drawings, specifications and Contract. Include in the punch list any remaining items on the "Rework Items List", which were not corrected prior to the Punch-Out Inspection. Include within the punch list the estimated date by which the deficiencies will be corrected. Provide a copy of the punch list to the Contracting Officer. The QC Manager, or staff, must make follow-on inspections to ascertain that all deficiencies have been corrected. Once this is accomplished, notify the Government that the facility is ready for the Government "Pre-Final Inspection".

1.15.2 Pre-Final Inspection

The Government and QCM will perform this inspection to verify that the facility is complete and ready to be occupied. A Government "Pre-Final Punch List" will be documented by the CQM as a result of this inspection. The QC Manager will ensure that all items on this list are corrected prior to notifying the Government that a "Final" inspection with the Client can be scheduled. Any items noted on the "Pre-Final" inspection must be corrected in a timely manner and be accomplished before the contract completion date for the work,or any particular increment thereof, if the project is divided into increments by separate completion dates.

1.15.3 Final Acceptance Inspection

Notify the Contracting Officer at least 14 calendar days prior to the date a final acceptance inspection can be held. State within the notice that all items previously identified on the pre-final punch list will be corrected and acceptable, along with any other unfinished Contract work, by the date of the final acceptance inspection. The Contractor must be represented by the QC Manager, the Project Superintendent, the CA, and others deemed necessary. Attendees for the Government will include the Contracting Officer, other FEAD/ROICC personnel, and personnel representing the Client. Failure of the Contractor to have all contract work acceptably complete for this inspection will be cause for the Contracting Officer to bill the Contractor for the Government's additional inspection cost in accordance with the Contract Clause entitled "Inspection of Construction."

1.16 DOCUMENTATION

Maintain current and complete records of on-site and off-site QC program operations and activities.

1.16.1 Construction Documentation

Reports are required for each day that work is performed and must be attached to the Contractor Quality Control Report prepared for the same day. Maintain current and complete records of on-site and off-site QC program operations and activities. The forms identified under the paragraph "INFORMATION FOR THE CONTRACTING OFFICER" will be used. Reports are required for each day work is performed. Account for each calendar day throughout the life of the Contract. Every space on the forms must be filled in. Use N/A if nothing can be reported in one of the spaces. The Project Superintendent and the QC Manager must prepare and sign the Contractor Production and CQC Reports, respectively. The reporting of work must be identified by terminology consistent with the construction schedule. In the "remarks" sections of the reports, enter pertinent information including directions received, problems encountered during construction, work progress and delays, conflicts or errors in the drawings or specifications, field changes, safety hazards encountered, instructions given and corrective actions taken, delays encountered and a record of visitors to the work site, quality control problem areas, deviations from the QC Plan, construction deficiencies encountered, meetings held. For each entry in the report(s), identify the Schedule Activity No. that is associated with the entered remark.

1.16.2 Quality Control Validation

Establish and maintain the following in a series of three ring binders. Binders shall be divided and tabbed as shown below. These binders must be readily available to the Contracting Officer during all business hours.

a. All completed Preparatory and Initial Phase Checklists, arranged by specification section.

b. All milestone inspections, arranged by Activity Number.

c. An up-to-date copy of the Testing Plan and Log with supporting field test reports, arranged by specification section.

d. Copies of all contract modifications, arranged in numerical order.

Also include documentation that modified work was accomplished.

e. An up-to-date copy of the Rework Items List.

f. Maintain up-to-date copies of all punch lists issued by the QC staff to the Contractor and Sub-Contractors and all punch lists issued by the Government.

g. Commissioning documentation including Cx checklists, schedules, tests, and reports.

1.16.3 Testing Plan and Log

As tests are performed, the CA will record on the "Testing Plan and Log" the date the test was performed and the date the test results were forwarded to the Contracting Officer. Attach a copy of the updated "Testing Plan and Log" to the last daily CQC Report of each month, per the paragraph "INFORMATION FOR THE CONTRACTING OFFICER". Provide a copy of the final "Testing Plan and Log" to the OMSI preparer for inclusion into the OMSI documentation.

1.16.4 Rework Items List

The QC Manager must maintain a list of work that does not comply with the Contract, identifying what items need to be reworked, the date the item was originally discovered, the date the item will be corrected by, and the date the item was corrected. There is no requirement to report a rework item that is corrected the same day it is discovered. Attach a copy of the "Rework Items List" to the last daily CQC Report of each month. The Contractor is responsible for including those items identified by the Contracting Officer.

1.16.5 As-Built Drawings

The QC Manager is required to ensure the as-built drawings are kept current on a daily basis and marked to show deviations which have been made from the Contract drawings. Ensure each deviation has been identified with the appropriate modifying documentation (e.g. PC No., Modification No., Request for Information No., etc.). The QC Manager must initial each revision. Upon completion of work, the QC Manager will furnish a certificate attesting to the accuracy of the as-built drawings prior to submission to the Contracting Officer.

1.17 NOTIFICATION ON NON-COMPLIANCE

The Contracting Officer will notify the Contractor of any detected non-compliance with the Contract. Take immediate corrective action after receipt of such notice. Such notice, when delivered to the Contractor at the work site, shall be deemed sufficient for the purpose of notification. If the Contractor fails or refuses to comply promptly, the Contracting Officer may issue an order stopping all or part of the work until satisfactory corrective action has been taken. No part of the time lost due to such stop orders will be made the subject of claim for extension of time for excess costs or damages by the Contractor.

1.18 CONSTRUCTION INDOOR AIR QUALITY (IAQ) MANAGEMENT PLAN

Submit an IAQ Management Plan within 15 days after notice to proceed and not less than 10 days before the preconstruction meeting. Revise and

resubmit Plan as required by the Contracting Officer. Make copies of the final plan available to all workers on site. Include provisions in the Plan to meet the requirements specified below and to ensure safe, healthy air for construction workers and building occupants.

1.18.1 Requirements During Construction

Provide for evaluation of indoor Carbon Dioxide concentrations in accordance with ASTM D6245. Provide for evaluation of volatile organic compounds (VOCs) in indoor air in accordance with ASTM D6345. Use filters with a Minimum Efficiency Reporting Value (MERV) of 8 in permanently installed air handlers during construction.

1.18.1.1 Control Measures

Meet or exceed the requirements of ANSI/SMACNA 008, Chapter 3, to help minimize contamination of the building from construction activities. The five requirements of this manual which must be adhered to are described below:

a. HVAC protection: Isolate return side of HVAC system from surrounding environment to prevent construction dust and debris from entering the duct work and spaces.

b. Source control: Use low emitting paints and other finishes, sealants, adhesives, and other materials as specified. When available, cleaning products shall have a low VOC content and be non-toxic to minimize building contamination. Utilize cleaning techniques that minimize dust generation. Cycle equipment off when not needed. Prohibit idling motor vehicles where emissions could be drawn into building. Designate receiving/storage areas for incoming material that minimize IAQ impacts.

c. Pathway interruption: When pollutants are generated use strategies such as 100 percent outside air ventilation or erection of physical barriers between work and non-work areas to prevent contamination.

d. Housekeeping: Clean frequently to remove construction dust and debris. Promptly clean up spills. Remove accumulated water and keep work areas dry to discourage the growth of mold and bacteria. Take extra measures when hazardous materials are involved.

e. Scheduling: Control the sequence of construction to minimize the absorption of VOCs by other building materials.

1.18.1.2 Moisture Contamination

a. Remove accumulated water and keep work dry.

b. Use dehumidification to remove moist, humid air from a work area.

c. Do not use combustion heaters or generators inside the building.

d. Protect porous materials from exposure to moisture.

e. Remove and replace items which remain damp for more than a few hours.

1.18.2 Requirements after Construction

After construction ends and prior to occupancy, conduct a building flush-out or test the indoor air contaminant levels. Flush-out must be a minimum two-weeks with MERV-13 filtration media as determined by ASHRAE 52.2at 100 percent outside air, or in accordance with LEED GBDC Ref Guide. Air contamination testing must be consistent with EPA's current Compendium of Methods for the Determination of Air Pollutants in Indoor Air, and with the LEED GBDC Ref Guide. After building flush-out or testing and prior to occupancy, replace filtration media. Filtration media must have a MERV of 13 as determined by ASHRAE 52.2.

PART 2 PRODUCTS

Not Used.

PART 3 EXECUTION

3.1 PREPARATION

Designate receiving/storage areas for incoming material to be delivered according to installation schedule and to be placed convenient to work area in order to minimize waste due to excessive materials handling and misapplication. Store and handle materials in a manner as to prevent loss from weather and other damage. Keep materials, products, and accessories covered and off the ground, and store in a dry, secure area. Prevent contact with material that may cause corrosion, discoloration, or staining. Protect all materials and installations from damage by the activities of other trades.

-- End of Section --

Performance Assessment Plan
MONTHLY EVALUATION

MONTH: _____YEAR:_____

Evaluation Factor	Yes	No	N/A	Comments
Experience of Personnel 1. Did the team identified in the proposal actively participate in the project? 2. If personnel substitutions were needed, was the degree of technical competence maintained?				
Working Relationships 1. Did the Construction team participate in the design process (i.e. attend meetings, provide insight, etc.)? Were the coordination meetings between Construction and Design team personnel documented? 2. Did the Design team participate in the construction process (i.e. attend CQC meetings, perform field oversight, etc.)? Were coordination meetings between Construction and Design team personnel documented? 3. Did the collaboration between the Construction and Design Team deliver a high value innovative facility? - Were Total Operating Cost minimized - What LEED points can be obtained - Was energy efficiency optimized, and the energy goals exceeded. 4. Was the budget management process clear; was an estimate submitted on time with each design submittal. Was the estimate updated to reflect the changes in the design submittal? 5. Did the Contractor's team effectively manage the project budget and the User's requirements to meet the customer's needs? Was project budget and emphasis in cost control exhibited in the estimate? (Contractor to document in comments block				

materials/systems innovations and provision of higher quality than required in the RFP Part 4) *Additional factors to be developed during Partnering.*				
Quality Control 1. Were re-submittals of design deliverables or construction rework required this month? 2. Were as built redlines updated this month? *Additional factors to be developed during Partnering.*				
Timely Performance 1. Is the Contractor on schedule? 2. Is the Contractor maintaining the schedule? (Can the Government confirm the project is on schedule?) 3. Is the Contractor following his schedule? *Additional factors to be developed during Partnering.*				
Effectiveness of Management 1. Did the Government need to intercede in resolving a subcontractor issue? *Additional factors to be developed during Partnering.*				
Compliance with Labor Standards 1. Did payrolls have to be resubmitted this month due to inaccuracies or errors? *Additional factors to be developed during Partnering.*				
Compliance with Safety Standards 1. Were there any lost time accidents this month?				

Additional factors to be developed during Partnering.				

GENERAL PERFORMANCE COMMENTS THIS MONTH:

Concurrence:

CM/ROICC Representative _____Date_____.

Project Manager _____Date_____.

Contractor Representative _____Date_____.

THIS PAGE HAS BEEN INTENTIONALLY LEFT BLANK

SECTION 01 50 00

TEMPORARY CONSTRUCTION FACILITIES AND CONTROLS
09/15

PART 1 GENERAL

1.1 SUMMARY

Requirements of this Section apply to, and are a component of, each section of the specifications.

1.2 REFERENCES

The publications listed below form a part of this specification to the extent referenced. The publications are referred to within the text by the basic designation only.

NATIONAL FIRE PROTECTION ASSOCIATION (NFPA)

NFPA 241	(2013) Standard for Safeguarding Construction,Alteration, and Demolition Operations
NFPA 70	(2014; AMD 1 2013; Errata 1 2013; AMD 2 2013; Errata 2 2013; AMD 3 2014; Errata 3-4 2014; AMD 4-6 2014) National Electrical Code

U.S. FEDERAL HIGHWAY ADMINISTRATION (FHWA)

MUTCD	(2009) Manual on Uniform Traffic Control Devices

1.3 SUBMITTALS

Government approval is required for submittals with a "G" designation; submittals not having a "G" designation are for Contractor Quality Control approval. Submit the following in accordance with Section 01 33 00 SUBMITTAL PROCEDURES:

SD-01 Preconstruction Submittals

Traffic Control Plan; G
Construction Site Plan; G
Temporary Boiler Site Plan; G

SD-03 Product Data

Temporary Boilers; G
Temporary Steam Piping; G
Temporary Wiring; G

SD-06 Test Reports

Temporary Boiler Test Results

1.4 CONSTRUCTION SITE PLAN

Prior to the start of work, submit a site plan showing the locations and dimensions of temporary facilities (including layouts and details, equipment and material storage area (onsite and offsite), and access and haul routes, avenues of ingress/egress to the fenced area and details of the fence installation. Identify any areas which may have to be graveled to prevent the tracking of mud. Indicate if the use of a supplemental or other staging area is desired. Show locations of safety and construction fences, site trailers, construction entrances, trash dumpsters, temporary sanitary facilities, and worker parking areas.

1.5 TEMPORARY BOILER SITE PLAN

Prior to the start of work, submit a site plan showing the locations and dimensions of temporary boiler facilities (including layouts and details of equipment area, routing of pipe and conduits connecting the temporary boilers to the plant, avenues of ingress and egress to the fenced area around the temporary boilers and details of the fence installation. Identify any areas which have to be graveled to prevent tracking mud. Indicate if the use of supplemental or other staging area is desired. Show locations of safety fences and fence entrances.

1.5.1 Temporary Steam System Connection Points

Contractor shall install connection points to the existing plant systems for one or more temporary boilers regardless of whether temporary boilers are used on this Project. The specific connection systems and sizes are:

1.5.1.1 High Pressure Steam

The connection point is in the 14 inch steam header between PRV-3 and PRV-4, located inside the plant building on the west side of the operating floor. See drawings for location and detail. Provide a permanent tee and flanged gate valve at the point of connection to the permanent plant piping system. The boiler connection will be a 10 inch line with a flanged gate valve and blind flange attached to the new tee in the steam header.

1.5.1.2 Feedwater

The connection point is on the west side of the building, above platform at 50-feet, 8 inches, as shown on drawings. This is a 6-inch flanged spool that will be replaced by a permanent blind flange on one side of the remaining piping and a gate valve on the other side. A new permanent 6 inch flanged spool is to be installed in what was the bypass line around this station.

1.5.1.3 Blowdown

The drain from the blowdown separator is to be connected to the Intermittent Blowdown (IBD) header in the basement of Boilers 1&2, near the center of this space. The blowdown line is expected to be 2-1/2 inches, schedule 40 carbon steel. Provide a permanent tee and flanged gate valve at the point of connection to the permanent plant piping system.

1.5.1.4 Natural Gas

The connection point to the new gas header will be located in the basement

of boilers 1 and 2, on the west side of the building. This connection point will be a 6 inch flange with a ball type block valve.

1.5.1.5 Fuel Oil

The connection point to the new fuel oil header will be located in the basement of boilers 1 and 2, on the west side of the building. This connection point will be a 1-1/2 inch flange with a ball type block valve.

1.5.1.6 Electric Power

Electric power for the temporary boilers is available by installing new breakers in SWBD A, located in the north end of the basement.

1.5.1.7 Controls

Alarm wiring from each temporary boiler is to be connected to the terminal strips in Boiler #3 control panel.

1.6 HURRICANE CONDITIONS OF READINESS

Unless otherwise directed, comply with:

a. Condition FOUR (Sustained winds of 50 knots or greater expected within 72 hours): Normal daily jobsite cleanup and good housekeeping practices. Collect and store in piles or containers scrap lumber, waste material, and rubbish for removal and disposal at the close of each work day. Maintain the construction site including storage areas, free of accumulation of debris. Stack form lumber in neat piles less than 4 feet high. Remove all debris, trash, or objects that could become missile hazards. Contact Contracting Officer for Condition of Readiness (COR) updates and completion of required actions.

b. Condition THREE (Sustained winds of 50 knots or greater expected within 48 hours): Maintain "Condition FOUR" requirements and commence securing operations necessary for "Condition ONE" which cannot be completed within 18 hours. Cease all routine activities which might interfere with securing operations. Commence securing and stow all gear and portable equipment. Make preparations for securing buildings. Review requirements pertaining to "Condition TWO" and continue action as necessary to attain "Condition THREE" readiness. Contact Contracting Officer for weather and COR updates and completion of required actions.

c. Condition TWO (Sustained winds of 50 knots or greater expected within 24 hours): Curtail or cease routine activities until securing operation is complete. Reinforce or remove form work and scaffolding. Secure machinery, tools, equipment, materials, or remove from the jobsite. Expend every effort to clear all missile hazards and loose equipment from general base areas. Contact Contracting Officer for weather and Condition of Readiness (COR) updates and completion of required actions.

d. Condition ONE. (Sustained winds of 50 knots or greater expected within 12 hours): Secure the jobsite, and leave Government premises.

PART 2 PRODUCTS

2.1 TEMPORARY TRAFFIC CONTROL

2.1.1 Barricades

Erect and maintain temporary barricades to limit public access to hazardous areas. Whenever safe public access to paved areas such as roads, parking areas or sidewalks is prevented by construction activities or as otherwise necessary to ensure the safety of both pedestrian and vehicular traffic barricades will be required. Securely place barricades clearly visible with adequate illumination to provide sufficient visual warning of the hazard during both day and night.

2.1.2 Fencing

a. Provide fencing along the construction site at all open excavations and tunnels to control access by unauthorized people. Fencing must be installed to be able to restrain a force of at least 250 pounds against it.

b. In addition, prior to the start of work, enclose the construction site with a temporary safety fence. The safety fence shall be bright orange, shall be made of high density polyethylene grid or approved equal or plastic fence from recovered materials containing 60-100 percent recovered content level plastic, a minimum of 42 inches high, supported and tightly secured to steel posts located on minimum 10 foot centers. Remove the fence from the work site upon completion of the contract.

c. If temporary boilers are used, enclose boilers with temporary chain link fencing.

2.1.3 Temporary Wiring

Provide temporary wiring in accordance with NFPA 241 and NFPA 70, Article 305-6(b), Assured Equipment Grounding Conductor Program. Include frequent inspection of all equipment and apparatus.

2.2 TEMPORARY STEAM SYSTEM EQUIPMENT

2.2.1 Temporary Boilers

Each temporary boiler is expected to have a capacity of 75,000 pounds per hour at 160 psig, measured at the outlet flange. Each boiler is to have a dual fuel capable, modulating burner capable of delivering a constant steam pressure at flows from 15,000 lbm/hour to full load. The burner is to be capable of accepting natural gas at a delivery pressure of at least 35 psig. The burner is to be capable of steam atomization of fuel oil and have its own fuel oil pump and pressure regulation system.

Each temporary boiler will be provided with a full fully instrumented combustion control system with automatic shutdowns for low water, high pressure, loss of flame, loss of draft and any others required by the Authority Having Jurisdiction. The combustion control system shall modulate the air flow and fuel flow to maintain minimum emissions and maximum combustion efficiency while producing a constant steam pressure across the load range. All piping connections to the temporary boiler are to be flanged.

Each temporary boiler is to be provided with at least 2 safety relief valves, a flanged non-return valve and a flanged gate valve on the steam exit nozzle.

Each temporary boiler is to have at least one manual blowdown combination valve.

Each temporary boiler is to be provided with an automatically actuated feedwater valve and drum level controller capable of maintaining the drum water level setpoint at all steaming rates.

Each temporary boiler is to be skid or trailer mounted and capable of being lifted or positioned by a crane with a spreader beam.

Each temporary boiler is to have a combination (fused or circuit breaker) starter for each motor installed plus a control power transformer for all control functions. The only power circuit to be required is 480v 3phase, with only one connection point per temporary boiler.

Each temporary boiler is to be furnished with a current inspection document from the state boiler inspector in its state of registration. Further, each temporary boiler is subject to inspection by the NAVFAC inspector for acceptance at the site.

Provide Temporary Boiler Test Results to Contracting Officer.

2.2.2 Steam Muffler

A temporary steam muffler capable of passing 75,000 lbm/hr at 150 psig, at no more than 90db at ground level, is to be provided. This device will be used for testing each temporary boiler for capacity on each fuel and for commissioning the new burners on each boiler. The muffler is to have a flanged entrance of 8-inch, 150 pound rating. The contractor is to provide a
temporary flanged gate valve and flanged globe valve for to manually control the admission of steam to the muffler.

2.2.3 Blowdown Separator

A temporary blowdown separator tank is to be provided whenever a temporary boiler is on site. All boiler blowdown and drain fluids are to be directed to this device. The water drain from this device is to be directed to the plant drain acceptable to the site as directed by the COR. A drain cooler is required if the selected drain requires water temperatures below an environmentally acceptable threshold, as directed by the COR.

2.3 TEMPORARY STEAM SYSTEM CONNECTION EQUIPMENT

2.3.1 Temporary Steam Piping

Provide temporary steam piping to each temporary boiler installed during the project in accordance with ASME B31.1 requirements and the requirements of Section 23 52 33.03 20. The temporary steam header is to be 10 inch schedule 40 pipe, grade A53 or A106, carbon steel with buttweld fittings and flanged valves. Boiler connections are expected to be 8 inch. Valves are to have 300 lb flanges or to match temporary boiler equipment interface flanges.

A permanent tie-in point is to be installed in the steam header, consisting of new flanges welded to the existing steam header; a flanged, welded 14 by 10 inch tee assembly; a new 10 inch flanged gate valve and a 10 inch blind flange. This assembly is to remain part of the permanent plant to allow for future temporary connections to the main steam header. At the conclusion of the project, the blind flange will be reinstalled on the block valve downstream face to form a sealed connection.

The temporary piping will begin at the flange of the new gate valve away from the main steam header and continue to the temporary muffler and each temporary boiler connected to the the steam system.

2.3.2 Temporary Feedwater Piping

Provide temporary feedwater piping to each temporary boiler installed during the project in accordance with ASME B31.1 requirements and the requirements of Section 23 52 33.03 20. The temporary feedwater piping is to be 6 inch schedule 40 pipe, grade A53 or A106, carbon steel. with buttweld fittings and flanged valves. Boiler connections are expected to be 4 inch. Valves are to have 300 lb flanges or to match temporary boiler equipment interface flanges.

A permanent tie-in point is to be installed in the feedwater system, on the 50ft elevation inside the west side of the boiler 1 and 2 building. This tie-in assembly will consist of a new 6 inch flanged gate valve, relocating two blind flanges, and a new flanged spool piece. This equipment will remain as part of the permanent plant at the end of the project. At the conclusion of the project, the blind flange will be reinstalled on the block valve downstream face to form a sealed connection.

The temporary feedwater piping will connect to the permanent plant feedwater piping at the downstream flange of the new gate valve installed at the permanent feedwater tie-in point and continue to the feedwater inlet flange on each temporary boiler.

2.3.3 Temporary Blowdown Line

Provide temporary blowdown lines from each temporary boiler to the temporary blowdown separator tank located in the temporary boiler area and a temporary drain line from the temporary blowdown separator to the boiler 1&2 blowdown header (2-1/2 inch) located in the boiler 1 and 2 basement, in accordance with ASME B31.3 requirements and the requirements of Specification 23 52 33.03 20. The temporary blowdown line will be schedule 40 pipe, grade A53 or A106, carbon steel with buttweld fittings and flanged valves.

2.3.4 Temporary Natural Gas Piping

Provide temporary feedwater piping to each temporary boiler installed during the project in accordance with ASME B31.3 requirements and the requirements of Section 23 52 33.03 20.

The temporary gas line will connect to the plant natural gas header at a single point inside the basement of boilers 1 and 2, using the block valve designated for this purpose. The temporary natural gas line will exit the building through the window on the west side of the building, behind the boiler #1 fresh air duct. A pressure regulator is to be installed in the line outside the building to provide proper pressure and flow to the connected temporary boilers. Downstream of the pressure regulator, the gas

piping will branch to each temporary boiler. A ball type block valve will be installed in the line at each temporary boiler.

2.3.5 Temporary Fuel Oil Piping

Provide temporary fuel oil piping to each temporary boiler installed during the project in accordance with ASME B31.3 requirements and the requirements of Section 23 52 33.03 20.

The temporary fuel oil line will connect to the plant Fuel Oil Supply header at a single point inside the basement of boilers 1 and 2, to the block valve designated for this purpose. The temporary fuel oil line will exit the building through the window on the west side of the building, behind the boiler #1 fresh air duct. Outside the building, the fuel oil line will branch to each temporary boiler. The expected flow to each boiler is about 14 gpm.

2.3.6 Temporary Wiring

Provide temporary wiring in accordance with NFPA 241 and NFPA 70. Include frequent inspection of all equipment and apparatus. Wiring will include new molded case circuit breakers (400 amp frame or larger) to be installed in Switchboard A. Each breaker is to power one temporary boiler. Conduit and cable is to be installed from Switchboard A to local disconnect switches mounted on the exterior of the building, within line of sight of the temporary boiler which it is serving.

At the end of construction, the temporary wiring may be demolished or abandoned in place and turned over to the Government.

PART 3 EXECUTION

3.1 EMPLOYEE PARKING

Contractor employees will park privately owned vehicles in an area designated by the Contracting Officer. This area will be within reasonable walking distance of the construction site. Contractor employee parking must not interfere with existing and established parking requirements of the Government installation.

3.2 CONTRACTOR UTILITIES

Contractor shall provide and pay for utilities.

3.2.1 Utilities at Special Locations

Reasonable amounts of utilities will be made available to the Contractor at the prevailing Government rates. These rates may be obtained upon application to the Commanding Officer, by way of the Contracting Officer. A $300.00 deposit will be required before connecting electricity. The Contractor will be responsible for making connections, providing transformers and meters, (THE CONTRACTOR MUST CERTIFY THAT ALL TRANSFORMERS INSTALLED FOR TEMPORARY POWER DURING THIS CONTRACT ARE PCB FREE), and making disconnections; and for providing backflow preventer devices on connections to domestic water lines. Under no circumstances will taps to base fire hydrants be allowed for obtaining domestic water. Neither potable water nor sanitary facilities will be available at the main Contractor laydown area at Marine Corps Air Station (MCAS), Cherry Point, NC.

3.2.2 Fuel sources for Boilers

Contractor is not responsible for fuel costs associated with the operation of existing, renovated or temporary boilers. Payment and delivery of coal, fuel oil and natural gas will be the responsibility of the government.

Contractor is responsible for all costs associated with fuel spills occuring during connecting or disconnection of new or existing equipment or piping as part of this project.

3.2.3 Temporary Sanitary Facilities

Provide adequate sanitary conveniences of a type approved for the use of persons employed on the work, properly secluded from public observation, and maintained in such a manner as required and approved by the Contracting Officer. Maintain these conveniences at all times without nuisance. Upon completion of the work, remove the conveniences from the premises, leaving the premises clean and free from nuisance. Dispose of sewage through connection to a municipal, district sanitary sewage system. Where such systems are not available, use chemical toilets or comparably effective units, and periodically empty wastes into a municipal, district sanitary sewage system, or remove waste to a commercial facility. Obtain approval from the system owner prior to discharge into any municipal, district, or commercial sanitary sewer system. Any penalties and/or fines associated with improper discharge shall be the responsibility of the Contractor.

3.2.4 Fire Protection

Provide temporary fire protection equipment for the protection of personnel and property during construction. Remove debris and flammable materials daily to minimize potential hazards.

3.3 TEMPORARY BOILERS

The expected location of the temporary boilers is on the railroad on the west side of the plant, south of the fan tower for boilers 3&4. The temporary boilers are to be installed only after all coal train operations have been completed. Contractor to provide any necessary cribbing to properly support the temporary boilers on the rails or railroad bed, ensuring the steam drum is level both longitudinally and radially.

3.3.1 Temporary Piping

Contractor shall provide adequate supports for each of the temporary piping systems listed, including any necessary expansion loops to reduce pipe stresses from thermal expansion.

3.3.2 Restoration After Temporary Piping

At the end of the project, temporary piping systems shall be removed to the block valve at the permanent plant system connection point. The block valve from the permanent plant system to the temporary system is to remain and be sealed with a blind flange. Supports for the temporary piping are to be removed, windows used for system access are to be restored and grounds are to be returned to prior condition.

3.4 TRAFFIC PROVISIONS

3.4.1 Maintenance of Traffic

a. Conduct operations in a manner that will not close any thoroughfare or interfere in any way with traffic on railways or highways except with written permission of the Contracting Officer at least 15 calendar days prior to the proposed modification date, and provide a Traffic Control Plan detailing the proposed controls to traffic movement for approval. The plan must be in accordance with State and local regulations and the MUTCD, Part VI. Make all notifications and obtain any permits required for modification to traffic movements outside Station's jurisdiction. Contractor may move oversized and slow-moving vehicles to the worksite provided requirements of the highway authority have been met.

b. Conduct work so as to minimize obstruction of traffic, and maintain traffic on at least half of the roadway width at all times. Obtain approval from the Contracting Officer prior to starting any activity that will obstruct traffic.

c. Provide, erect, and maintain, at contractors expense, lights, barriers, signals, passageways, detours, and other items, that may be required by the Life Safety Signage, overhead protection authority having jurisdiction.

3.4.2 Protection of Traffic

Maintain and protect traffic on all affected roads during the construction period except as otherwise specifically directed by the Contracting Officer. Measures for the protection and diversion of traffic, including the provision of watchmen and flagmen, erection of barricades, placing of lights around and in front of equipment the work, and the erection and maintenance of adequate warning, danger, and direction signs, will be as required by the State and local authorities having jurisdiction. Protect the traveling public from damage to person and property. Minimize the interference with public traffic on roads selected for hauling material to and from the site. Investigate the adequacy of existing roads and their allowable load limit. Contractor is responsible for the repair of any damage to roads caused by construction operations.

3.4.3 Rush Hour Restrictions

Do not interfere with the peak traffic flows preceding and during normal operations for MCAS Cherry Point without notification to and approval by the Contracting Officer.

3.4.4 Dust Control

Dust control methods and procedures must be approved by the Contracting Officer. Treat dust abatement on access roads with applications of calcium chloride, water sprinklers, or similar methods or treatment.

3.5 CONTRACTOR'S TEMPORARY FACILITIES

Trailers or storage buildings will be permitted, where space is available, subject to the approval of the Contracting Officer. The trailers or buildings shall be in good condition, free from visible damage, rust and

deterioration, and meet all applicable safety requirements. Trailers shall be roadworthy and comply with all appropriate state and local vehicle requirements. Failure to maintain storage trailers or buildings to these standards shall result in the removal of non-complying units at the Contractor's expense. A sign not smaller than 24 x 24 inches shall be conspicuously placed on the trailer depicting the company name, business phone number, and emergency phone number. Trailers shall be anchored to resist high winds and must meet applicable state and local standards for anchoring mobile trailers. A laydown site will be provided as indicated for trailers, storage buildings, and/or bulk storage within five miles of the construction site. All trailers or storage buildings shall be suitably painted, kept in a good state of repairs, and clearly identified with the Contractor's name and telephone number. All laydown sites, staging areas, and construction sites shall be kept free of debris and trash, fences properly maintained, and all vegetation trimmed. Failure of the Contractor to maintain his trailers or storage buildings in good condition will be considered sufficient reason to require their removal from the job site. Trailers shall be anchored to resist high winds and must meet applicable state or local standards for anchoring mobile trailers.

If required, a laydown site will be provided within five miles of the construction site and will be identified at the preconstruction conference. If a material storage trailer is used at the laydown site, it shall be anchored to resist high winds and must meet applicable state or local standards for anchoring mobile trailers. All trailers and storage buildings shall be suitably painted, kept in a good state of repair, and clearly identified with the Contractor's name and telephone number. Space for an office trailer will not be provided at the construction site. A staging area will be provided immediately adjacent to the construction site. The staging area will be the minimum amount of area necessary for maneuverability of equipment and temporary placement of materials intended for immediate incorporation into the work. All laydown sites, staging area, and construction sites shall be kept free of debris and trash, fences maintained, and all vegetation trimmed.

3.5.1 Safety

Protect the integrity of any installed safety systems or personnel safety devices. If entrance into systems serving safety devices is required, the Contractor must obtain prior approval from the Contracting Officer. If it is temporarily necessary to remove or disable personnel safety devices in order to accomplish contract requirements, provide alternative means of protection prior to removing or disabling any permanently installed safety devices or equipment and obtain approval from the Contracting Officer.

3.5.2 Appearance of Trailers

a. Trailers utilized by the Contractor for administrative or material storage purposes must present a clean and neat exterior appearance and be in a state of good repair. Trailers which, in the opinion of the Contracting Officer, require exterior painting or maintenance will not be allowed on installation property.

b. Paint using suitable paint materials and maintain the temporary facilities. Failure to do so will be sufficient reason to require their removal.

3.5.3 Weather Protection of Temporary Facilities and Stored Materials

Take necessary precautions to ensure that roof openings and other critical openings in the building are monitored carefully. Take immediate actions required to seal off such openings when rain or other detrimental weather is imminent, and at the end of each workday. Ensure that the openings are completely sealed off to protect materials and equipment in the building from damage.

3.5.3.1 Building and Site Storm Protection

When a warning of gale force winds is issued, take precautions to minimize danger to persons, and protect the work and nearby Government property. Precautions must include, but are not limited to, closing openings; removing loose materials, tools and equipment from exposed locations; and removing or securing scaffolding and other temporary work. Close openings in the work when storms of lesser intensity pose a threat to the work or any nearby Government property.

3.6 CLEANUP

Remove construction debris, waste materials, packaging material and the like from the work site daily. Any dirt or mud which is tracked onto paved or surfaced roadways must be cleaned away. Store within the fenced area described above or at the supplemental storage area any materials resulting from demolition activities which are salvageable. Neatly stacked stored materials not in trailers, whether new or salvaged.

3.7 RESTORATION OF STORAGE AREA

Upon completion of the project remove the bulletinboard, signs, barricades, haulroads, and any other temporary products from the site. After removal of trailers, materials, and equipment from within the fenced area, remove the fence that will become the property of the Contractor. Restore to the original or better condition, areas used by the Contractor for the storage of equipment or material, or other use. Gravel used to traverse grassed areas must be removed and the area restored to its original condition, including top soil and seeding as necessary.

-- End of Section --

THIS PAGE HAS BEEN INTENTIONALLY LEFT BLANK

SECTION 01 57 19.01 20

SUPPLEMENTAL TEMPORARY ENVIRONMENTAL CONTROLS
05/16

PART 1 GENERAL

1.1 MID-ATLANTIC

Comply with the following state, regional, and local requirements.

1.1.1 North Carolina

1.1.1.1 MCAS Cherry Point

1.1.1.1.1 Removal of Waste

Remove and dispose of rubbish and debris from Government property.

a. Provide 24-hour advance written notice to the Contracting Office of Contractor's intention to dispose of off base.

b. Disposal at sites or landfills not holding a valid state of North Carolina permit is specifically prohibited. The prohibition also applies to sites where a permit my have been applied for but not yet obtained.

c. Off-base disposal of construction debris outside the parameters of this paragraph at site without State permits and/or not in accordance with regulatory requirements will require the Contractor at his own expense to remove, transport and relocate the debris to a State approved site. The Contractor will also be required to pay any fines, penalties, or fees related to the illegal disposal of construction debris.

1.1.1.1.2 Recycling Construction Debris

a. The Contractor shall provide collection bins on site to facilitate effective waste management and recycling. The Contractor shall instruct their sub-contractors and workers that select material is to be separated from other construction debris for recycling. When the site collection bins are full the Contractor shall deliver the material to the Material Recovery Facility, (MRF). Only those materials currently accepted by the Material Recovery Facility shall be left in their collection bins - any material refused by the Recycling Center shall be removed from the base by the General Contractor and legally disposed of in an authorized North Carolina landfill.

b. The following materials are currently being accepted for recycling at the MRF; (the list of materials being accepted may change, check with the MRF; see item c. below):

PET Plastic, (for example water bottles)
HDPE Plastic, (for example, buckets and milk jugs)
Aluminum cans
Glass
Corrugated Cardboard

Paper

c. The Material Recovery Facility (MRF) is located at Building 4638, next to EAD on Access Road. Point of Contact: Dave Cooke, (252) 466-2864; dave.l.cooke@usmc.mil

d. All scrap metal, (other than aluminum cans, which shall be delivered to the MRF as mentioned above), may be recycled at the DLA Disposition Services facility located at Building 154D on Cleveland Street.

1.1.1.1.3 Requirements For Off Site Soil

Do not furnish or transport soils onto MCAS Cherry Point or outlying fields when such act would violate the Comprehensive Environmental Response Compensation and Liability Act (CERCLA) or the General Statutes of North Carolina.

The contractor shall provide documentation certifying that all soil furnished under the contract contains no petroleum or hazardous or toxic materials as stated in DoD Instruction 4715.6, which implements 10 U.S.C. 2692. This documentation shall include the Soil Authorization Form (SAF) showing the volume of soil needed, analytical test data to support the environmental condition of the soil, and a copy of the State-issued "mining permit" for the borrow pit source. The MCAS Cherry Point Environmental Affairs Department (EAD) will review these documents before off site soil is considered approved for use.

The following methods shall be used to determine if soil meets the requirements for off site soil (RFOSS).

If the total amount of soil to be brought onto MCAS Cherry Point for a single contract is less than 200 cubic yards, the contractor shall certify the soil meets the RFOSS by inspecting for "apparent contamination" as determined by visual or other indications of contamination including abnormal or unnatural color, chemical or petroleum odors, or saturation with a chemical or petroleum. If the soil shows no apparent contamination, the contractor shall provide to EAD a signed SAF certifying the soil contains no apparent contamination. Soil showing apparent contamination shall not be utilized aboard MCAS Cherry Point or outlying fields.

If the total amount of soil to be brought aboard MCAS Cherry Point for a single contract is equal to or greater than 200 cubic yards, the soil shall be analyzed by a North Carolina certified laboratory. The laboratory must be certified by North Carolina in the specific tests to be performed. Sampling must be conducted by qualified personnel following proper field sampling methodology and proper chain-of-custody protocol must be followed. Otherwise, the sampling will be considered invalid. Consult with the selected laboratory about the specific sample handling procedures required by the analytical methods. Sample containers, sample volumes, and timeframes differ depending on the analytical method.

Sampling requirements are summarized below and are for a single soil source only.

a. One representative sample for soil volumes of 200 cubic yards to 1,000 cubic yards needed.

b. For soil volumes greater than 1,000 cubic yards, one additional

representative sample is required for each additional 2,000 cubic yards or portion thereof.

A representative sample is achieved by collecting multiple samples in a defined area (e.g. soil stockpile or borrow pit) and directing the laboratory to combine them into a "composite sample" for analysis. The composite or representative sample is intended to represent the soil source as a whole.

Samples shall be collected by qualified personnel following proper field sampling methodology. For each representative sample, 3 "primary samples" from each of 2 soil borings (or excavation pits) shall be obtained for a total of 6 primary samples. The 3 primary samples collected from each boring/pit shall be obtained at even intervals throughout the soil column (i.e. upper, middle, lower) and placed into individual sampling containers. Samples shall not be combined in the field. The 6 primary samples shall be sent to the NC certified laboratory where they will be combined into one "composite sample" for analysis.

Soil sample(s) shall be analyzed for Gasoline Range Organics (GRO), Diesel Range Organics (DRO), Oil and Grease (O&G), and eight Metals (Arsenic; Barium; Cadmium; Chromium; Lead; Mercury; Selenium; and Silver). The laboratory method detection limits must be set below the State action levels or the testing will be considered invalid. All units are to be reported in milligrams per kilograms (mg/kg).

a. Gasoline Range Organics - use Standard Method 5030

b. Diesel Range Organics - use Standard Method 5030

c. Oil & Grease - use EPA Method 9071 with a silica gel wash

d. Total Metals - use EPA 6010 (Arsenic, Barium, Cadmium, Chromium, Lead, Selenium, and Silver)

e. Total Metals - use EPA 7471 (Mercury only)

If test results are greater than the allowed detection limits for petroleum constituents (GRO, DRO, O&G) or the standards for the eight metals (as provided by the EPA), the soil from which the sample was taken shall not be approved for use.

1.1.1.2 Inadvertent Discovery of Petroleum Contaminated Soil or Hazardous Wastes

If petroleum contaminated soil or suspected hazardous waste is found during construction that was not identified in the contract documents, the Contractor shall immediately notify the Contracting Officer. The Contractor shall not disturb this material until authorized by the Contracting Officer.

PART 2 PRODUCTS

Not Used

PART 3 EXECUTION

Not Used

-- End of Section --

SECTION 01 57 19

TEMPORARY ENVIRONMENTAL CONTROLS
11/15

PART 1 GENERAL

1.1 REFERENCES

The publications listed below form a part of this specification to the extent referenced. The publications are referred to within the text by the basic designation only.

U.S. ENVIRONMENTAL PROTECTION AGENCY (EPA)

EPA SW-846	(Third Edition; Update IV) Test Methods for Evaluating Solid Waste: Physical/Chemical Methods

U.S. NATIONAL ARCHIVES AND RECORDS ADMINISTRATION (NARA)

29 CFR 1910.120	Hazardous Waste Operations and Emergency Response
40 CFR 112	Oil Pollution Prevention
40 CFR 122.26	Storm Water Discharges (Applicable to State NPDES Programs, see section 123.25)
40 CFR 241	Guidelines for Disposal of Solid Waste
40 CFR 243	Guidelines for the Storage and Collection of Residential, Commercial, and Institutional Solid Waste
40 CFR 258	Subtitle D Landfill Requirements
40 CFR 260	Hazardous Waste Management System: General
40 CFR 261	Identification and Listing of Hazardous Waste
40 CFR 261.7	Residues of Hazardous Waste in Empty Containers
40 CFR 262	Standards Applicable to Generators of Hazardous Waste
40 CFR 262.31	Standards Applicable to Generators of Hazardous Waste-Labeling
40 CFR 262.34	Standards Applicable to Generators of Hazardous Waste-Accumulation Time
40 CFR 263	Standards Applicable to Transporters of Hazardous Waste

40 CFR 264	Standards for Owners and Operators of Hazardous Waste Treatment, Storage, and Disposal Facilities
40 CFR 265	Interim Status Standards for Owners and Operators of Hazardous Waste Treatment, Storage, and Disposal Facilities
40 CFR 266	Standards for the Management of Specific Hazardous Wastes and Specific Types of Hazardous Waste Management Facilities
40 CFR 268	Land Disposal Restrictions
40 CFR 273	Standards For Universal Waste Management
40 CFR 273.2	Standards for Universal Waste Management - Batteries
40 CFR 273.4	Standards for Universal Waste Management - Mercury Containing Equipment
40 CFR 273.5	Standards for Universal Waste Management - Lamps
40 CFR 279	Standards for the Management of Used Oil
40 CFR 300	National Oil and Hazardous Substances Pollution Contingency Plan
40 CFR 300.125	National Oil and Hazardous Substances Pollution Contingency Plan - Notification and Communications
40 CFR 355	Emergency Planning and Notification
40 CFR 403	General Pretreatment Regulations for Existing and New Sources of Pollution
40 CFR 50	National Primary and Secondary Ambient Air Quality Standards
40 CFR 60	Standards of Performance for New Stationary Sources
40 CFR 61	National Emission Standards for Hazardous Air Pollutants
40 CFR 63	National Emission Standards for Hazardous Air Pollutants for Source Categories
40 CFR 64	Compliance Assurance Monitoring
40 CFR 745	Lead-Based Paint Poisoning Prevention in Certain Residential Structures
40 CFR 761	Polychlorinated Biphenyls (PCBs) Manufacturing, Processing, Distribution in Commerce, and Use Prohibitions

49 CFR 171	General Information, Regulations, and Definitions
49 CFR 172	Hazardous Materials Table, Special Provisions, Hazardous Materials Communications, Emergency Response Information, and Training Requirements
49 CFR 178	Specifications for Packagings

DEFINITIONS

1.2 Class I and II Ozone Depleting Substance (ODS)

Class I ODS is defined in Section 602(a) of The Clean Air Act. A list of Class I ODS can be found on the EPA website at the following weblink. http://www.epa.gov/ozone/science/ods/classone.html.

Class II ODS is defined in Section 602(s) of The Clean Air Act. A list of Class II ODS can be found on the EPA website at the following weblink. http://www.epa.gov/ozone/science/ods/classtwo.html.

1.3 Contractor Generated Hazardous Waste

Contractor generated hazardous waste is materials that, if abandoned or disposed of, may meet the definition of a hazardous waste. These waste streams would typically consist of material brought on site by the Contractor to execute work, but are not fully consumed during the course of construction. Examples include, but are not limited to, excess paint thinners (i.e. methyl ethyl ketone, toluene), waste thinners, excess paints, excess solvents, waste solvents, excess pesticides, and contaminated pesticide equipment rinse water.

1.4 Electronics Waste

Electronics waste is discarded electronic devices intended for salvage, recycling, or disposal.

1.5 Environmental Pollution and Damage

Environmental pollution and damage is the presence of chemical, physical, or biological elements or agents which adversely affect human health or welfare; unfavorably alter ecological balances of importance to human life; affect other species of importance to humankind; or degrade the environment aesthetically, culturally or historically.

1.6 Environmental Protection

Environmental protection is the prevention/control of pollution and habitat disruption that may occur to the environment during construction. The control of environmental pollution and damage requires consideration of land, water, and air; biological and cultural resources; and includes management of visual aesthetics; noise; solid, chemical, gaseous, and liquid waste; radiant energy and radioactive material as well as other pollutants.

1.7 Hazardous Debris

As defined in paragraph SOLID WASTE, debris that contains listed hazardous waste (either on the debris surface, or in its interstices, such as pore structure) in accordance with 40 CFR 261. Hazardous debris also includes debris that exhibits a characteristic of hazardous waste in accordance with 40 CFR 261.

1.8 Hazardous Materials

Hazardous materials as defined in 49 CFR 171 and listed in 49 CFR 172.

Hazardous material is any material that: Is regulated as a hazardous material in accordance with 49 CFR 173; or requires a Safety Data Sheet (SDS) in accordance with 29 CFR 1910.120; or during end use, treatment, handling, packaging, storage, transportation, or disposal meets or has components that meet or have potential to meet the definition of a hazardous waste as defined by 40 CFR 261 Subparts A, B, C, or D. Designation of a material by this definition, when separately regulated or controlled by other sections or directives, does not eliminate the need for adherence to that hazard-specific guidance which takes precedence over this section for "control" purposes. Such material includes ammunition, weapons, explosive actuated devices, propellants, pyrotechnics, chemical and biological warfare materials, medical and pharmaceutical supplies, medical waste and infectious materials, bulk fuels, radioactive materials, and other materials such as asbestos, mercury, and polychlorinated biphenyls (PCBs).

1.9 Hazardous Waste

Hazardous Waste is any material that meets the definition of a solid waste and exhibit a hazardous characteristic (ignitability, corrosivity, reactivity, or toxicity) as specified in 40 CFR 261, Subpart C, or contains a listed hazardous waste as identified in 40 CFR 261, Subpart D.

1.10 Land Application

Land Application means spreading or spraying discharge water at a rate that allows the water to percolate into the soil. No sheeting action, soil erosion, discharge into storm sewers, discharge into defined drainage areas, or discharge into the "waters of the United States" must occur. Comply with federal, state, and local laws and regulations.

1.11 Municipal Separate Storm Sewer System (MS4) Permit

MS4 permits are those held by installations to obtain NPDES permit coverage for their stormwater discharges.

1.12 National Pollutant Discharge Elimination System (NPDES)

The NPDES permit program controls water pollution by regulating point sources that discharge pollutants into waters of the United States.

1.13 Oily Waste

Oily waste are those materials that are, or were, mixed with Petroleum, Oils, and Lubricants (POLs) and have become separated from that POLs. Oily wastes also means materials, including wastewaters, centrifuge solids, filter residues or sludges, bottom sediments, tank bottoms, and

sorbents which have come into contact with and have been contaminated by, POLs and may be appropriately tested and discarded in a manner which is in compliance with other state and local requirements.

This definition includes materials such as oily rags, "kitty litter" sorbent clay and organic sorbent material. These materials may be land filled provided that: It is not prohibited in other state regulations or local ordinances; the amount generated is "de minimus" (a small amount); it is the result of minor leaks or spills resulting from normal process operations; and free-flowing oil has been removed to the practicable extent possible. Large quantities of this material, generated as a result of a major spill or in lieu of proper maintenance of the processing equipment, are a solid waste. As a solid waste, perform a hazardous waste determination prior to disposal. As this can be an expensive process, it is recommended that this type of waste be minimized through good housekeeping practices and employee education.

1.14 Regulated Waste

Regulated waste are solid wastes that have specific additional federal, state, or local controls for handling, storage, or disposal.

1.15 Sediment

Sediment is soil and other debris that have eroded and have been transported by runoff water or wind.

1.16 Solid Waste

Solid waste is a solid, liquid, semi-solid or contained gaseous waste. A solid waste can be a hazardous waste, non-hazardous waste, or non-Resource Conservation and Recovery Act (RCRA) regulated waste. Types of solid waste typically generated at construction sites may include:

1.16.1 Debris

Debris is non-hazardous solid material generated during the construction, demolition, or renovation of a structure that exceeds 2.5-inch particle size that is: a manufactured object; plant or animal matter; or natural geologic material (for example, cobbles and boulders), broken or removed concrete, masonry, and rock asphalt paving; ceramics; roofing paper and shingles. Inert materials may be reinforced with or contain ferrous wire, rods, accessories and weldments.

1.16.2 Green Waste

Green waste is the vegetative matter from landscaping, land clearing and grubbing, including, but not limited to, grass, bushes, scrubs, small trees and saplings, tree stumps and plant roots. Marketable trees, grasses and plants that are indicated to remain, be re-located, or be re-used are not included. Green waste must be recycled by composting or conversion into mulch or other means.

1.16.3 Material not regulated as solid waste

Material not regulated as solid waste is nuclear source or byproduct materials regulated under the Federal Atomic Energy Act of 1954 as amended; suspended or dissolved materials in domestic sewage effluent or irrigation return flows, or other regulated point source discharges;

regulated air emissions; and fluids or wastes associated with natural gas or crude oil exploration or production.

1.16.4 Non-Hazardous Waste

Non-hazardous waste is waste that is excluded from, or does not meet, hazardous waste criteria in accordance with 40 CFR 263.

1.16.5 Recyclables

Recyclables are materials, equipment and assemblies such as doors, appliances, paint, metal, wall board, plastic, asphalt, brick, concrete, drywall, fixtures, flooring, gravel, green waste, cardboard, pallets, paper, pipe, roofing, sand, shingles, soil, windows, door and window frames, plumbing fixtures, glazing and mirrors that are recovered and sold as recyclable, insulated/non-insulated copper wire cable, and structural components. It also includes commercial-grade refrigeration equipment with Freon removed, household appliances where the basic material content is metal, clean polyethylene terephthalate bottles, cooking oil, used fuel oil, textiles, high-grade paper products and corrugated cardboard, stackable pallets in good condition, clean crating material, and clean rubber/vehicle tires. Metal meeting the definition of lead contaminated or lead based paint contaminated may be included as recyclable if sold to a scrap metal company. Paint cans that meet the definition of empty containers in accordance with 40 CFR 261.7 may be included as recyclable if sold to a scrap metal company. The Navy has an on-site metal scrap yard. To coordinate the recycling of metal scrap, call 841-2464. Scrap metal can be taken to a scrap yard but information must be provided to the Navy on the monthly Waste Report. The Navy can provide a copy of the Waste Report. Call 841-7561. Common C&D wastes that must be recycled include carpet, wood, aggregate, paint, metal, wallboard, and plastic. Other types of C&D recyclable materials are appliances, asphalt, brick, concrete, drywall, fixtures, flooring, gravel, green waste, OCC-cardboard, pallets, paper, pipe, roofing, sand, shingles, and soil.

1.16.6 Surplus Soil

Surplus soil is existing soil that is in excess of what is required for this work, including aggregates intended, but not used, for on-site mixing of concrete, mortars, and paving. Contaminated soil meeting the definition of hazardous material or hazardous waste is not included and must be managed in accordance with paragraph HAZARDOUS MATERIAL MANAGEMENT.

1.16.7 Scrap Metal

This includes scrap and excess ferrous and non-ferrous metals such as reinforcing steel, structural shapes, pipe, and wire that are recovered or collected and disposed of as scrap. Scrap metal meeting the definition of hazardous material or hazardous waste is not included.

1.16.8 Wood

Wood is dimension and non-dimension lumber, plywood, chipboard, hardboard. Treated or painted wood that meets the definition of lead contaminated or lead based contaminated paint is not included. Treated wood includes, but is not limited to, lumber, utility poles, crossties, and other wood products with chemical treatment. Wood with lead paint can be recycled at a facility that can separate the paint from the wood (usually accomplished by incineration with emission equipment that will

capture lead emissions).

1.17 Surface Discharge

Surface discharge means discharge of water into drainage ditches, storm sewers, creeks or "waters of the United States". Surface discharges are discrete, identifiable sources and require a permit from the governing agency. Comply with federal, state, and local laws and regulations.

1.18 Wastewater

Wastewater is the used water and solids from a community that flow to a treatment plant.

1.18.1 Stormwater

Stormwater is any precipitation in an urban or suburban area that does not evaporate or soak into the ground, but instead collects and flows into storm drains, rivers, and streams.

1.19 Waters of the United States

Waters of the United States means Federally jurisdictional waters, including wetlands, that are subject to regulation under Section 404 of the Clean Water Act or navigable waters, as defined under the Rivers and Harbors Act.

1.20 Wetlands

Wetlands are those areas that are inundated or saturated by surface or groundwater at a frequency and duration sufficient to support, and that under normal circumstances do support, a prevalence of vegetation typically adapted for life in saturated soil conditions.

1.21 Universal Waste

The universal waste regulations streamline collection requirements for certain hazardous wastes in the following categories: batteries, pesticides, mercury-containing equipment (for example, thermostats), and lamps (for example, fluorescent bulbs). The rule is designed to reduce hazardous waste in the municipal solid waste (MSW) stream by making it easier for universal waste handlers to collect these items and send them for recycling or proper disposal. These regulations can be found at 40 CFR 273.

1.21.1 1.2.21 Green Procurement

Purchase of environmentally preferable products and services in accordance with federally mandated ‘green’ procurement.

1.22 SUBMITTALS

Government approval is required for submittals with a "G" designation; submittals not having a "G" designation are for Contractor Quality Control approval. Submittals with an "S" are for inclusion in the Sustainability Notebook, in conformance with Section 01 33 29 SUSTAINABILITY REPORTING.

Submit the following in accordance with Section 01 33 00 SUBMITTAL PROCEDURES:

SD-01 Preconstruction Submittals

Preconstruction Survey

Solid Waste Protection Plan; G

Regulatory Notifications; G

Environmental Protection Plan; G

Dirt and Dust Control Plan; G

Employee Training Records; G

Environmental Manager Qualifications; G

SD-06 Test Reports

Laboratory Analysis

Inspection Reports

Solid Waste Management Report; G

SD-07 Certificates

Employee Training Records; G

ECATTS Certificate Of Completion; G

Erosion and Sediment Control Inspector Qualifications

SD-11 Closeout Submittals

Waste Determination Documentation; G

Disposal Documentation for Hazardous and Regulated Waste; G

Assembled Employee Training Records; G

Solid Waste Management Permit; G

Solid Waste Management Report; G

Contractor Hazardous Material Inventory Log; G

Hazardous Waste/Debris Management; G

Regulatory Notifications; G

Sales Documentation; G

Contractor Certification

As-Built Topographic Survey

1.23 ENVIRONMENTAL PROTECTION REQUIREMENTS

Provide and maintain, during the life of the contract, environmental protection as defined. Plan for and provide environmental protective measures to control pollution that develops during construction practice. Plan for and provide environmental protective measures required to correct conditions that develop during the construction of permanent or temporary environmental features associated with the project. Protect the environmental resources within the project boundaries and those affected outside the limits of permanent work during the entire duration of this Contract. Comply with federal, state, and local regulations pertaining to the environment, including water, air, solid waste, recycling, hazardous waste and substances, oily substances, and noise pollution.

Tests and procedures assessing whether construction operations comply with Applicable Environmental Laws may be required. Analytical work must be performed by qualified laboratories; and where required by law, the laboratories must be certified.

1.23.1 Conformance with the Environmental Management System

The Contractor shall perform work under this contract consistent with the policy and objectives identified in the installation's Environmental Management System (EMS). The Contractor shall perform work in a manner that conforms to objectives and targets, environmental programs and operational controls identified by the EMS. The Contractor will provide monitoring and measurement information as necessary to address environmental performance relative to environmental, energy, and transportation management goals. In the event an EMS nonconformance or environmental noncompliance associated with the contracted services, tasks, or actions occurs, the Contractor shall take corrective and/or preventative actions. In addition, the Contractor shall ensure that its employees are aware of their roles and responsibilities under the EMS and how these EMS roles and responsibilities affect work performed under the contract.

Contractor is responsible for ensuring that their employees receive applicable environmental and occupational health and safety training, and keep up to date on regulatory required specific training for the type of work to be conducted onsite. All on-site Contractor personnel, and their subcontractor personnel, performing tasks that have the potential to cause a significant environmental impact shall be competent on the basis of appropriate education, training or experience. Upon contract award, the Contracting Officer's Representative will notify the installation's EMS coordinator to arrange EMS training. Refer to Section 01 57 19.01 20, SUPPLEMENTAL TEMPORARY ENVIRONMENTAL CONTROLS for additional site specific EMS requirements related to construction. The installation's EMS coordinator shall identify training needs associated with environmental aspects and the EMS, and arrange training or take other action to meet these needs. The Contractor shall provide training documentation to the Contracting Officer. The EMS coordinator shall retain associated records.

1.23.2 Environmental Compliance Assessment Training and Tracking Systm (ECATTS

The QC Manager is responsible for environmental compliance on projects unless an Environmental Manager is named. The QC Manager (and alternative QC Manager) or Environmental Manager shall complete ECATTS training prior to starting respective portions of on-site work under this contract. If personnel changes occur for any of these positions after starting work, replacement personnel shall complete ECATTS training within 14 days of assignment to the project.

Submit an ECATTS certificate of completion for personnel who have completed the required "Environmental Compliance Assessment Training and Tracking System (ECATTS)" training. This training is web-based and can be accessed from any computer with Internet access using the following instructions.

Register for NAVFAC Environmental Compliance Training and Tracking System, by logging on to http://navfac.ecatts.com/. Obtain the password for registration from the Contracting Officer.

This training has been structured to allow contractor personnel to receive credit under this contract and also to carry forward credit to future contracts. Contractors shall ensure that the QC Manager (and alternate QC Manager) or Environmental Manager review their training plans for new modules or updated training requirements prior to beginning work. Some training modules are tailored for specific State regulatory requirements; therefore, Contractors working in multiple states will be requires to re-take modules tailored to the state where the contract work is being performed.

ECATTS is available for use by all contractor and subcontractor personnel associated with this project. These other personnel are encouraged (but not required) to take the training and may do so at their discretion.

1.24 Green or Affirmative Procurement

The contractor shall acquire products that are energy-efficient, water-efficient, bio-based, environmentally preferable, non-ozone depleting, contain recycled content, or are non-toxic or less-toxic alternatives. This includes acquiring paper of at least 30 percent post-consumer fiber content (in addition, uncoated printing and writing paper must be used). The contractor shall apply procurement preference for EPEAT-registered electronic products and for electronic equipment, Energy Star and FEMP designated electronic equipment must be procured. The contractor shall reduce or eliminate acquisition and use of toxic chemicals and increase the use of acceptable alternative chemicals and processes The DOD green procurement information is availalbe at http://www.p2sustainabilitylibrary.mil/p2_documents/don_gpp_implementationguide020509. The Green Procurement Program includes:

Recovered Material- aka Comprehensive Procurement Guideline (CPG) program- part of EPA's continuing effort to promote the use of materials recovered from solid waste. (Go to: http://www.epa.gov/epawaste/conserve/tools/cpg/index.htm). EPA has designated products in eight categories; EPA has already designated or is proposing to designate products grouped into the following eight categories: Construction Products; Landscaping Products; Non-paper Office Products; Paper and Paper Products; Park and Recreation Products;

Transportation Products; Vehicular Products; and Miscellaneous Products.

Energy Efficient : (FEMP, ENERGY STAR®, EPEAT) Federal agencies are required to procure energy efficient products qualified in the Energy Star® program or designated by Federal Energy Management Program (FEMP). This includes items such as computers, monitors, printers, scanners, fax machines, and copiers; building construction, renovation and maintenance projects; and purchases of appliances. Water-efficiency requirements apply to building construction and renovation projects.

Alternative fuels/alternative fueled vehicles Federal agencies must acquire alternative fueled vehicles (AFVs), alternative fuels (i.e. E85, E100, biodiesel) for those vehicles, and fuel-efficient petroleum powered passenger cars and light trucks.

Biobased Products: Biobased items include, but are not limited to, clothing, bedding, linens; office products; printing products; transportation fleet maintenance products; construction products; and janitorial and landscaping products. USDA maintains the BioPreferred Program website (http://www.biopreferred.gov).

Non ozone depleting substances are required for: refrigeration and air conditioning; foam insulation; cleaning solvents; fire suppressants; aerosol solvents and propellants; sterilants; and adhesives, coatings and inks.

Environmentally preferable products; EPPs are any products and services that are more environmentally friendly than what the activity/installation routinely purchases, but are not already covered by one of the other programs already described.

Green Procurement applies to all DoD and operations, except military tactical vehicles and equipment. Military tactical vehicles and equipment include weapon systems used on the battle ground, portable equipment that supports logistical and combat aircraft, vehicles to transport combat and support personnel during military operations, and other military equipment weapon systems.

1.25 QUALITY ASSURANCE

1.25.1 Preconstruction Survey and Protection of Features

This paragraph supplements the Contract Clause PROTECTION OF EXISTING VEGETATION, STRUCTURES, EQUIPMENT, UTILITIES, AND IMPROVEMENTS. Prior to start of any onsite construction activities, perform a Preconstruction Survey of the project site with the Contracting Officer, and take photographs showing existing environmental conditions in and adjacent to the site. Submit a report for the record. Include in the report a plan describing the features requiring protection under the provisions of the Contract Clauses, which are not specifically identified on the drawings as environmental features requiring protection along with the condition of trees, shrubs and grassed areas immediately adjacent to the site of work and adjacent to the Contractor's assigned storage area and access route(s), as applicable. The Contractor and the Contracting Officer will sign this survey report upon mutual agreement regarding its accuracy and completeness. Protect those environmental features included in the survey report and any indicated on the drawings, regardless of interference that their preservation may cause to the work under the Contract.

1.25.2 Regulatory Notifications

Provide regulatory notification requirements in accordance with federal, state and local regulations. In cases where the Government will also provide public notification (such as stormwater permitting), coordinate with the Contracting Officer. Submit copies of regulatory notifications to the Contracting Officer at least 10 days prior to commencement of work activities. Typically, regulatory notifications must be provided for the following (this listing is not all-inclusive): demolition, renovation, NPDES defined site work, construction, removal or use of a permitted air emissions source, and remediation of controlled substances (asbestos, hazardous waste, lead paint). The contractor is responsible for assisting the Navy and ensuring that regulator requirements have been met.

1.25.3 Environmental Brief

Attend an environmental brief to be included in the preconstruction meeting. Provide the following information: types, quantities, and use of hazardous materials that will be brought onto the installation; and types and quantities of wastes/wastewater that may be generated during the Contract. Discuss the results of the Preconstruction Survey at this time.

Prior to initiating any work on site, meet with the Contracting Officer and installation Environmental Office to discuss the proposed Environmental Management Plan (EMP). Develop a mutual understanding relative to the details of environmental protection, including measures for protecting natural and cultural resources, required reports, required permits, permit requirements (such as mitigation measures), and other measures to be taken.

1.25.4 Environmental Manager

Appoint in writing an Environmental Manager for the project site. The Environmental Manager is directly responsible for coordinating contractor compliance with federal, state, local, and installation requirements. The Environmental Manager must ensure compliance with Hazardous Waste Program requirements (including hazardous waste handling, storage, manifesting, and disposal); implement the EPP; ensure environmental permits are obtained, maintained, and closed out; ensure compliance with Stormwater Program requirements; ensure compliance with Hazardous Materials (storage, handling, and reporting) requirements; and coordinate any remediation of regulated substances (lead, asbestos, PCB transformers). This can be a collateral position; however, the person in this position must be trained to adequately accomplish the following duties: ensure waste segregation and storage compatibility requirements are met; inspect and manage Satellite Accumulation areas; ensure only authorized personnel add wastes to containers; ensure Contractor personnel are trained in 40 CFR requirements in accordance with their position requirements; coordinate removal of waste containers; and maintain the Environmental Records binder and required documentation, including environmental permits compliance and close-out. Submit Environmental Manager Qualifications to the Contracting Officer.

1.25.5 Employee Training Records

Prepare and maintain Employee Training Records throughout the term of the contract meeting applicable 40 CFR requirements. Provide Employee Training Records in the Environmental Records Binder. Ensure every employee completes a program of classroom instruction or on-the-job

training that teaches them to perform their duties in a way that ensures compliance with federal, state and local regulatory requirements for RCRA Large Quantity Generator. Provide a Position Description for each employee, by subcontractor, based on the Davis-Bacon Wage Rate designation or other equivalent method, evaluating the employee's association with hazardous and regulated wastes. This Position Description will include training requirements as defined in 40 CFR 265 for a Large Quantity Generator facility. Submit these Assembled Employee Training Records to the Contracting Officer at the conclusion of the project, unless otherwise directed.

Train personnel to meet EPA requirements. Conduct environmental protection/pollution control meetings for personnel prior to commencing construction activities. Contact additional meetings for new personnel and when site conditions change. Include in the training and meeting agenda: methods of detecting and avoiding pollution; familiarization with statutory and contractual pollution standards; installation and care of devices, vegetative covers, and instruments required for monitoring purposes to ensure adequate and continuous environmental protection/pollution control; anticipated hazardous or toxic chemicals or wastes, and other regulated contaminants; recognition and protection of archaeological sites, artifacts, waters of the United States, and endangered species and their habitat that are known to be in the area. Provide copy of the Erosion and Sediment Control Inspector Qualifications as defined by EPA.

1.25.6 Non-Compliance Notifications

The Contracting Officer will notify the Contractor in writing of any observed noncompliance with federal, state or local environmental laws or regulations, permits, and other elements of the Contractor's EPP. After receipt of such notice, inform the Contracting Officer of the proposed corrective action and take such action when approved by the Contracting Officer. The Contracting Officer may issue an order stopping all or part of the work until satisfactory corrective action has been taken. No time extensions will be granted or equitable adjustments allowed for any such suspensions. This is in addition to any other actions the Contracting Officer may take under the contract, or in accordance with the Federal Acquisition Regulation or Federal Law.

1.26 ENVIRONMENTAL MANAGEMENT PLAN

The purpose of the EPP is to present an overview of known or potential environmental issues that must be considered and addressed during construction. Incorporate construction related objectives and targets from the installation's EMS into the EPP. Include in the EPP measures for protecting natural and cultural resources, required reports, and other measures to be taken. Meet with the Contracting Officer or Contracting Officer Representative to discuss the EPP and develop a mutual understanding relative to the details for environmental protection including measures for protecting natural resources, required reports, and other measures to be taken. Submit the EPP within 15 days after Contract award and not less than 10 days before the preconstruction meeting. Revise the EPP throughout the project to include any reporting requirements, changes in site conditions, or contract modifications that change the project scope of work in a way that could have an environmental impact. No requirement in this section will relieve the Contractor of any applicable federal, state, and local environmental protection laws and regulations. During Construction, identify, implement, and submit for

approval any additional requirements to be included in the EPP. Maintain the current version onsite.

The EPP includes, but is not limited to, the following elements:

1.26.1 General Overview and Purpose

1.26.1.1 Descriptions

A brief description of each specific plan required by environmental permit or elsewhere in this Contract such as spill control plan, solid waste management plan, wastewater management plan, air pollution control plan, contaminant prevention plan, Hazardous, Toxic and Radioactive Waste (HTRW) Plan Non-Hazardous Solid Waste Disposal Plan.

1.26.1.2 Duties

The duties and level of authority assigned to the person(s) on the job site who oversee environmental compliance, such as who is responsible for adherence to the EPP, who is responsible for spill cleanup and training personnel on spill response procedures, who is responsible for manifesting hazardous waste to be removed from the site (if applicable), and who is responsible for training the Contractor's environmental protection personnel.

1.26.1.3 Procedures

A copy of any standard or project-specific operating procedures that will be used to effectively manage and protect the environment on the project site.

1.26.1.4 Communications

Communication and training procedures that will be used to convey environmental management requirements to Contractor employees and subcontractors.

1.26.1.5 Contact Information

Emergency contact information contact information (office phone number, cell phone number, and e-mail address).

1.26.2 General Site Information

1.26.2.1 Drawings

Drawings showing locations of proposed temporary excavations or embankments for haul roads, stream crossings, jurisdictional wetlands, material storage areas, structures, sanitary facilities, storm drains and conveyances, and stockpiles of excess soil.

1.26.2.2 Work Area

Work area plan showing the proposed activity in each portion of the area and identify the areas of limited use or nonuse. Include measures for marking the limits of use areas, including methods for protection of features to be preserved within authorized work areas and methods to control runoff and to contain materials on site, and a traffic control plan.

1.26.2.3 Documentation

A letter signed by an officer of the firm appointing the Environmental Manager and stating that person is responsible for managing and implementing the Environmental Program as described in this contract. Include in this letter the Environmental Manager's authority to direct the removal and replacement of non-conforming work.

1.26.3 Management of Natural Resources

a. Land resources

b. Tree protection

c. Replacement of damaged landscape features

d. Temporary construction

e. Stream crossings

f. Fish and wildlife resources

g. Wetland areas

h. Shoreline and Beaches

i. Marine Waters

1.26.4 Protection of Historical and Archaeological Resources

a. Objectives

b. Methods

1.26.5 Stormwater Management and Control

a. Ground cover

b. Erodible soils

c. Temporary measures

(1) Structural Practices

(2) Temporary and permanent stabilization

d. Effective selection, implementation and maintenance of Best Management Practices (BMPs).

1.26.6 Protection of the Environment from Waste Derived from Contractor Operations

Control and disposal of solid and sanitary waste. Control and disposal of hazardous waste.

This item consist of the management procedures for hazardous waste to be generated. The elements of those procedures will coincide with the Installation Hazardous Waste Management Plan. The Contracting Officer

will provide a copy of the Installation Hazardous Waste Management Plan. As a minimum, include the following:

a. List of the types of hazardous wastes expected to be generated

b. Procedures to ensure a written waste determination is made for appropriate wastes that are to be generated

c. Sampling/analysis plan, including laboratory method(s) that will be used for waste determinations and copies of relevant laboratory certifications

d. Methods and proposed locations for hazardous waste accumulation/storage (that is, in tanks or containers)

e. Management procedures for storage, labeling, transportation, and disposal of waste (treatment of waste is not allowed unless specifically noted)

f. Management procedures and regulatory documentation ensuring disposal of hazardous waste complies with Land Disposal Restrictions (40 CFR 268)

g. Management procedures for recyclable hazardous materials such as lead-acid batteries, used oil, and similar

h. Used oil management procedures in accordance with 40 CFR 279; Hazardous waste minimization procedures

i. Plans for the disposal of hazardous waste by permitted facilities; and Procedures to be employed to ensure required employee training records are maintained.

1.26.7 Prevention of Releases to the Environment

Procedures to prevent releases to the environment

Notifications in the event of a release to the environment

1.26.8 Regulatory Permits

List what notifications and permit applications must be made. Some permits require up to 180 days to obtain. Demonstrate that those permits have been obtained or applied for by including copies of applicable environmental permits. The EPP will not be approved until the permits have been obtained.
Provide documents, applications, and fees for permits to the Navy. The Navy will make regulatory notifications and obtain permits. Do not start work until permits are obtained from the Navy.

1.26.9 Clean Air Act Compliance

1.26.9.1 Haul Route

Submit truck and material haul routes along with a Dirt and Dust Control Plan for controlling dirt, debris, and dust on Installation roadways. As a minimum, identify in the plan the subcontractor and equipment for cleaning along the haul route and measures to reduce dirt, dust, and

debris from roadways.

1.26.9.2 Pollution Generating Equipment

Identify air pollution generating equipment or processes that may require federal, state, or local permits under the Clean Air Act. Determine requirements based on any current installation permits and the impacts of the project. Provide a list of all fixed or mobile equipment, machinery or operations that could generate air emissions during the project to the Installation Environmental Office (Air Program Manager).

1.26.9.3 Stationary Internal Combustion Engines

Identify portable and stationary internal combustion engines that will be supplied, used or serviced. Comply with 40 CFR 60 Subpart IIII, 40 CFR 60 Subpart JJJJ, 40 CFR 63 Subpart ZZZZ, and local regulations as applicable. At minimum, include the make, model, serial number, manufacture date, size (engine brake horsepower), and EPA emission certification status of each engine. Maintain applicable records and log hours of operation and fuel use. Logs must include reasons for operation and delineate between emergency and non-emergency operation.

1.26.9.4 Refrigerants

Identify management practices to ensure that heating, ventilation, and air conditioning (HVAC) work involving refrigerants complies with 40 CFR 82 requirements. Technicians must be certified, maintain copies of certification on site, use certified equipment and log work that requires the addition or removal of refrigerant. Any refrigerant reclaimed is the property of the Government, coordinate with the Installation Environmental Office to determine the appropriate turn in location.

1.26.9.5 Air Pollution-engineering Processes

Identify planned air pollution-generating processes and management control measures (including, but not limited to, spray painting, abrasive blasting, demolition, material handling, fugitive dust, and fugitive emissions). Log hours of operations and track quantities of materials used.

1.26.9.6 Compliant Materials

Provide the Government a list of and SDSs for all hazardous materials proposed for use on site. Materials must be compliant with all Clean Air Act regulations for emissions including solvent and volatile organic compound contents, and applicable National Emission Standards for Hazardous Air Pollutants requirements. The Government may alter or limit use of specific materials as needed to meet installation permit requirements for emissions.

1.27 LICENSES AND PERMITS

Obtain licenses and permits required for the construction of the project and in accordance with FAR 52.236-7. Notify the Government of all general use permitted equipment the Contractor plans to use on site. This paragraph supplements the Contractor's responsibility under FAR 52.236-7.

a. The following permits will be obtained by the Contracting Officer:

a. Storm Waterb. Wetlands
c.Water Quality
d.Coastal Zone

1.28 ENVIRONMENTAL RECORDS BINDER

Maintain on-site a separate three-ring Environmental Records Binder and submit at the completion of the project. Make separate parts within the binder that correspond to each submittal listed under paragraph CLOSEOUT SUBMITTALS in this section.

1.29 SOLID WASTE MANAGEMENT PERMIT

Provide the Contracting Officer with written notification of the quantity of anticipated solid waste or debris that is anticipated or estimated to be generated by construction. Include in the report the locations where various types of waste will be disposed or recycled. Include letters of acceptance from the receiving location or as applicable; submit one copy of the receiving location state and local Solid Waste Management Permit or license showing such agency's approval of the disposal plan before transporting wastes off Government property.

1.29.1 Solid Waste Management Report

Monthly, submit a solid waste disposal report to the Contracting Officer. For each waste, the report will state the classification (using the definitions provided in this section), amount, location, and name of the business receiving the solid waste.

PART 2 PRODUCTS

Not Used

PART 3 EXECUTION

3.1 PROTECTION OF NATURAL RESOURCES

Minimize interference with, disturbance to, and damage to fish, wildlife, and plants, including their habitats. Prior to the commencement of activities, consult with the Installation Environmental Office, regarding rare species or sensitive habitats that need to be protected. The protection of rare, threatened, and endangered animal and plant species identified, including their habitats, is the Contractor's responsibility.

Preserve the natural resources within the project boundaries and outside the limits of permanent work. Restore to an equivalent or improved condition upon completion of work that is consistent with the requirements of the Installation Environmental Office or as otherwise specified. Confine construction activities to within the limits of the work indicated or specified.

3.1.1 Flow Ways

Do not alter water flows or otherwise significantly disturb the native habitat adjacent to the project and critical to the survival of fish and wildlife, except as specified and permitted.

3.1.2 Vegetation

Except in areas to be cleared, do not remove, cut, deface, injure, or

destroy trees or shrubs without the Contracting Officer's permission. Do not fasten or attach ropes, cables, or guys to existing nearby trees for anchorages unless authorized by the Contracting Officer. Where such use of attached ropes, cables, or guys is authorized, the Contractor is responsible for any resultant damage.

Protect existing trees that are to remain to ensure they are not injured, bruised, defaced, or otherwise damaged by construction operations. Remove displaced rocks from uncleared areas. Coordinate with the Contracting Officer and Installation Environmental Office to determine appropriate action for trees and other landscape features scarred or damaged by equipment operations.

3.1.3 Streams

Stream crossings must allow movement of materials or equipment without violating water pollution control standards of the federal, state, and local governments. Construction of stream crossing structures must be in compliance with any required permits including, but not limited to, Clean Water Act Section 404, and Section 401 Water Quality.

The Contracting Officer's approval and appropriate permits are required before any equipment will be permitted to ford live streams. In areas where frequent crossings are required, install temporary culverts or bridges. Obtain Contracting Officer's approval prior to installation. Remove temporary culverts or bridges upon completion of work, and repair the area to its original condition unless otherwise required by the Contracting Officer.

3.2 STORMWATER

Do not discharge stormwater from construction sites to the sanitary sewer. If the water is noted or suspected of being contaminated, it may only be released to the storm drain system if the discharge is specifically permitted. Obtain authorization in advance from the Installation Environmental Office for any release of contaminated water.

3.2.1 Construction General Permit

Provide a Construction General Permit as required by 40 CFR 122.26 or the State of North Carolina General Permit. Under the terms and conditions of the permit, install, inspect, maintain BMPs, prepare stormwater erosion and sediment control inspection reports, and submit SWPPP inspection reports. Maintain construction operations and management in compliance with the terms and conditions of the general permit for stormwater discharges from construction activities.

3.2.1.1 Stormwater Pollution Prevention Plan

Submit a project-specific Stormwater Pollution Prevention Plan (SWPPP) to the Contracting Officer for approval, prior to the commencement of work. The SWPPP must meet the requirements of 40 CFR 122.26 and the North Carolina State General Permit for stormwater discharges from construction sites.

Include the following:

a. Comply with terms of the state general permit for stormwater discharges from construction activities. Prepare SWPPP in accordance

with state requirements. Use state

b. Select applicable BMPs from EPA Fact Sheets located at http://water.epa.gov/polwaste/npdes/swbmp/Construction-Site-StormWater-Run-Off-Control.cfm or in accordance with applicable state or local requirements.

c. Include a completed copy of the Notice of Intent, BMP Inspection Report Template, and Stormwater Notice of Termination, except for the effective date.

d. Comply with additional requirements provided in Section 01 57 19.01 20 SUPPLEMENTAL TEMPORARY ENVIRONMENTAL CONTROLS

3.2.1.2 Stormwater Notice of Intent for Construction Activities

Prepare and submit the Notice of Intent for NPDES coverage under the general permit for construction activities to the Contracting Officer for review and approval.

Submit the approved NOI and appropriate permit fees onto the appropriate federal or state agency for approval. No land disturbing activities may commence without permit coverage. Maintain an approved copy of the SWPPP at the onsite construction office, and continually update as regulations require, reflecting current site conditions.

Comply with the additional requirements in Section 01 57 19.01 20 SUPPLEMENTAL TEMPORARY ENVIRONMENTAL CONTROLS.

3.2.1.3 Inspection Reports

Submit "Inspection Reports" to the Contracting Officer in accordance with the State of _____the State of North Carolina Construction General Permit. Provide Inspection Reports in accordance with 01 57 19.01 20 SUPPLEMENTAL TEMPORARY ENVIRONMENTAL CONTROLS.

3.2.1.4 Stormwater Pollution Prevention Plan Compliance Notebook

Create and maintain a three ring binder of documents that demonstrate compliance with the Construction General Permit. Include a copy of the permit Notice of Intent, proof of permit fee payment, SWPPP and SWPPP update amendments, inspection reports and related corrective action records, copies of correspondence with the the NC State Permitting Agency, and a copy of the permit Notice of Termination in the binder. At project completion, the notebook becomes property of the Government. Provide the compliance notebook to the Contracting Officer.

3.2.1.5 Stormwater Notice of Termination for Construction Activities

Submit a Notice of Termination to the Contracting Officer for approval once construction is complete and final stabilization has been achieved on all portions of the site for which the permittee is responsible. Once approved, submit the Notice of Termination to the appropriate state or federal agency. Prepare as-built topographic survey information required by the permitting agency for certification of the stormwater management system, and provide to the Contracting Officer.

3.2.2 Work Area Limits

Mark the areas that need not be disturbed under this Contract prior to

commencing construction activities. Mark or fence isolated areas within the general work area that are not to be disturbed. Protect monuments and markers before construction operations commence. Where construction operations are to be conducted during darkness, any markers must be visible in the dark. Personnel must be knowledgeable of the purpose for marking and protecting particular objects.

3.2.3 Contractor Facilities and Work Areas

Place field offices, staging areas, stockpile storage, and temporary buildings in areas designated on the drawings or as directed by the Contracting Officer. Move or relocate the Contractor facilities only when approved by the Government. Provide erosion and sediment controls for onsite borrow and spoil areas to prevent sediment from entering nearby waters. Control temporary excavation and embankments for plant or work areas to protect adjacent areas.

3.2.4 Municipal Separate Storm Sewer System (MS4) Management

Comply with the Installation's MS4 permit requirements. Comply with requirements of Section 01 57 19.01 20 SUPPLEMENTAL TEMPORARY ENVIRONMENTAL CONTROLS.

3.3 SURFACE AND GROUNDWATER

3.3.1 Cofferdams, Diversions, and Dewatering

Construction operations for dewatering, removal of cofferdams, tailrace excavation, and tunnel closure must be constantly controlled to maintain compliance with existing state water quality standards and designated uses of the surface water body. Comply with the State of North Carolina water quality standards and anti-degradation provisions . Do not discharge excavation ground water to the sanitary sewer, storm drains, or to surface waters without prior specific authorization in writing from the Installation Environmental Office. Discharge of hazardous substances will not be permitted under any circumstances. Use sediment control BMPs to prevent construction site runoff from directly entering any storm drain or surface waters.

If the construction dewatering is noted or suspected of being contaminated, it may only be released to the storm drain system if the discharge is specifically permitted. Obtain authorization for any contaminated groundwater release in advance from the Installation Environmental Officer and the federal or state authority, as applicable. Discharge of hazardous substances will not be permitted under any circumstances.

3.3.2 Waters of the United States

Do not enter, disturb, destroy, or allow discharge of contaminants into waters of the United States.

3.4 PROTECTION OF CULTURAL RESOURCES

3.4.1 Archaeological Resources

Existing archaeological resources within the work area are shown on the drawings. Protect these resources and be responsible for their preservation during the life of the Contract. If, during excavation or

other construction activities, any previously unidentified or unanticipated historical, archaeological, and cultural resources are discovered or found, activities that may damage or alter such resources will be suspended. Resources covered by this paragraph include, but are not limited to: any human skeletal remains or burials; artifacts; shell, midden, bone, charcoal, or other deposits; rock or coral alignments, pavings, wall, or other constructed features; and any indication of agricultural or other human activities. Upon such discovery or find, immediately notify the Contracting Officer so that the appropriate authorities may be notified and a determination made as to their significance and what, if any, special disposition of the finds should be made. Cease all activities that may result in impact to or the destruction of these resources. Secure the area and prevent employees or other persons from trespassing on, removing, or otherwise disturbing such resources. The Government retains ownership and control over archaeological resources.

3.4.2 Historical Resources

Existing historical resources within the work area are shown on the drawings. Protect these resources and be responsible for their preservation during the life of the Contract.

3.5 AIR RESOURCES

Equipment operation, activities, or processes will be in accordance with 40 CFR 64 and state air emission and performance laws and standards.

3.5.1 Preconstruction Air Permits

Notify the Air Program Manager, through the Contracting Officer, at least 6 months prior to bringing equipment, assembled or unassembled, onto the Installation, so that air permits can be secured. Necessary permitting time must be considered in regard to construction activities. Clean Air Act (CAA) permits must be obtained prior to bringing equipment, assembled or unassembled, onto the Installation.

Confirm that these permits have been obtained.

3.5.2 Oil or Dual-fuel Boilers and Furnaces

Provide product data and details for new, replacement, or relocated fuel fired boilers, heaters, or furnaces to the Installation Environmental Office (Air Program Manager) through the Contracting Officer. Data to be reported include: equipment purpose (water heater, building heat, process), manufacturer, model number, serial number, fuel type (oil type, gas type) size (MMBTU heat input). Provide in accordance with paragraph PRECONSTRUCTION AIR PERMITS.

3.5.3 Burning

Burning is prohibited on the Government premises.

3.5.4 Class I and II ODS Prohibition

Class I and II ODS are Government property and must be returned to the Government for appropriate management. Coordinate with the Installation Environmental Office to determine the appropriate location for turn in of all reclaimed refrigerant.

3.5.5 Accidental Venting of Refrigerant

Accidental venting of a refrigerant is a release and must be reported immediately to the Contracting Officer.

3.5.6 EPA Certification Requirements

Heating and air conditioning technicians must be certified through an EPA-approved program. Maintain copies of certifications at the employees' places of business; technicians must carry certification wallet cards, as provided by environmental law.

3.5.7 Dust Control

Keep dust down at all times, including during nonworking periods. Sprinkle or treat, with dust suppressants, the soil at the site, haul roads, and other areas disturbed by operations. Dry power brooming will not be permitted. Instead, use vacuuming, wet mopping, wet sweeping, or wet power brooming. Air blowing will be permitted only for cleaning nonparticulate debris such as steel reinforcing bars. Only wet cutting will be permitted for cutting concrete blocks, concrete, and bituminous concrete. Do not unnecessarily shake bags of cement, concrete mortar, or plaster.

3.5.7.1 Particulates

Dust particles, aerosols and gaseous by-products from construction activities, and processing and preparation of materials (such as from asphaltic batch plants) must be controlled at all times, including weekends, holidays, and hours when work is not in progress. Maintain excavations, stockpiles, haul roads, permanent and temporary access roads, plant sites, spoil areas, borrow areas, and other work areas within or outside the project boundaries free from particulates that would exceed 40 CFR 50, state, and local air pollution standards or that would cause a hazard or a nuisance. Sprinkling, chemical treatment of an approved type, baghouse, scrubbers, electrostatic precipitators, or other methods will be permitted to control particulates in the work area. Sprinkling, to be efficient, must be repeated to keep the disturbed area damp. Provide sufficient, competent equipment available to accomplish these tasks. Perform particulate control as the work proceeds and whenever a particulate nuisance or hazard occurs. Comply with state and local visibility regulations.

3.5.7.2 Abrasive Blasting

Blasting operations cannot be performed without prior approval of the Installation Air Program Manager. The use of silica sand is prohibited in sandblasting.

Provide tarpaulin drop cloths and windscreens to enclose abrasive blasting operations to confine and collect dust, abrasive agent, paint chips, and other debris. Perform work involving removal of hazardous material in accordance with 29 CFR 1910.

3.5.8 Odors

Control odors from construction activities. The odors must be in compliance with state regulations and local ordinances and may not

constitute a health hazard.

3.6 WASTE MINIMIZATION

Minimize the use of hazardous materials and the generation of waste. Include procedures for pollution prevention/ hazardous waste minimization in the Hazardous Waste Management Section of the EPP. Obtain a copy of the installation's Pollution Prevention/Hazardous Waste Minimization Plan for reference material when preparing this part of the EPP. If no written plan exists, obtain information by contacting the Contracting Officer. Describe the anticipated types of the hazardous materials to be used in the construction when requesting information.

3.6.1 Salvage, Reuse and Recycle

Identify anticipated materials and waste for salvage, reuse, and recycling. Describe actions to promote material reuse, resale or recycling. To the extent practicable, all scrap metal must be sent for reuse or recycling and will not be disposed of in a landfill.

Include the name, physical address, and telephone number of the hauler, if transported by a franchised solid waste hauler. Include the destination and, unless exempted, provide a copy of the state or local permit (cover) or license for recycling.

3.6.2 Nonhazardous Solid Waste Diversion Report

Maintain an inventory of nonhazardous solid waste diversion and disposal of construction and demolition debris. Submit a report to _____ through the Contracting Officer on the first working day after each fiscal year quarter, starting the first quarter that nonhazardous solid waste has been generated. Include the following in the report:

Construction and Demolition (C&D) Debris Disposed	_____ cubic yards,cubic meterscubic meters as appropriate
C&D Debris Recycled	cubic yards, as appropriate
Total C&D Debris Generated	cubic yards, as appropriate
Waste Sent to Waste-To-Energy Incineration Plant (This amount should not be included in the recycled amount)	cubic yards, as appropriate

3.7 WASTE MANAGEMENT AND DISPOSAL

3.7.1 Waste Determination Documentation

Complete a Waste Determination form (provided at the pre-construction conference) for Contractor-derived wastes to be generated. All potentially hazardous solid waste streams that are not subject to a specific exclusion or exemption from the hazardous waste regulations (e.g. scrap metal, domestic sewage) or subject to special rules, (lead-acid

batteries and precious metals) must be characterized in accordance with the requirements of 40 CFR 261 or corresponding applicable state or local regulations. Base waste determination on user knowledge of the processes and materials used, and analytical data when necessary. Consult with the Installation environmental staff for guidance on specific requirements. Attach support documentation to the Waste Determination form. As a minimum, provide a Waste Determination form for the following waste (this listing is not inclusive): oil- and latex -based painting and caulking products, solvents, adhesives, aerosols, petroleum products, and containers of the original materials.

3.7.1.1 Sampling and Analysis of Waste

3.7.1.1.1 Waste Sampling

Sample waste in accordance with EPA SW-846. Clearly mark each sampled drum or container with the Contractor's identification number, and cross reference to the chemical analysis performed.

3.7.1.1.2 Laboratory Analysis

Follow the analytical procedure and methods in accordance with the 40 CFR 261. Provide analytical results and reports performed to the Contracting Officer.

3.7.1.1.3 Analysis Type

Identify hazardous waste by analyzing for the following characteristics: ignitability, corrosivity, reactivity, toxicity based on TCLP results, .

3.7.2 Solid Waste Management

3.7.2.1 Waste t Report

Monthly, submit a solid waste disposal report, available from the Navy (841-2464), to the Contracting Officer. For each waste that is landfilled or recycled/reused/recovered, the report will state the classification (using the definitions provided in this section), amount, location, and name of the business receiving the solid waste and recycled/reused/recovered material.

Provide copies of the waste handling facilities' weight tickets, receipts, bills of sale, and other sales documentation. In lieu of sales documentation, a statement indicating the disposal location for the solid waste that is signed by an employee authorized to legally obligate or bind the firm may be submitted. The sales documentation Contractor certification must include the receiver's tax identification number and business, EPA or state registration number, along with the receiver's delivery and business addresses and telephone numbers. For each solid waste retained for the Contractor's own use, submit the information previously described in this paragraph on the solid waste disposal report. Prices paid or received do not have to be reported to the Contracting Officer unless required by other provisions or specifications of this Contract or public law.

3.7.2.2 Control and Management of Solid Wastes

Pick up solid wastes, and place in covered containers that are regularly emptied. Do not prepare or cook food on the project site. Prevent

contamination of the site or other areas when handling and disposing of wastes. At project completion, leave the areas clean. Employ segregation measures so that no hazardous or toxic waste will become co-mingled with non-hazardous solid waste. Transport solid waste off Government property and dispose of it in compliance with 40 CFR 260, state, and local requirements for solid waste disposal. A Subtitle D RCRA permitted landfill is the minimum acceptable offsite solid waste disposal option. Verify that the selected transporters and disposal facilities have the necessary permits and licenses to operate. Comply with site procedures. Solid waste disposal offsite must comply with most stringent local, state, and federal requirements, including 40 CFR 241, 40 CFR 243, and 40 CFR 258.

Manage hazardous material used in construction, including but not limited to, aerosol cans, waste paint, cleaning solvents, contaminated brushes, and used rags, in accordance with 49 CFR 173.

3.7.3 Control and Management of Hazardous Waste

Do not dispose of hazardous waste on Government property. Do not discharge any waste to a sanitary sewer, storm drain, or to surface waters or conduct waste treatment or disposal on Government property without written approval of the Contracting Officer.Recycling is required (50% of non-C&D debris must be recycled; 60% of C&D debris must be recycled) and can be coordinated with the Contracting Officer and the activity recycling coordinator.

3.7.3.1 Hazardous Waste/Debris Management

Identify construction activities that will generate hazardous waste or debris. Provide a documented waste determination for resultant waste streams. Identify, label, handle, store, and dispose of hazardous waste or debris in accordance with federal, state, and local regulations, including 40 CFR 261, 40 CFR 262, 40 CFR 263, 40 CFR 264, 40 CFR 265, 40 CFR 266, and 40 CFR 268.

Manage hazardous waste in accordance with the approved Hazardous Waste Management Section of the EPP. Store hazardous wastes in approved containers in accordance with 49 CFR 173 and 49 CFR 178. Hazardous waste generated within the confines of Government facilities is identified as being generated by the Government. Prior to removal of any hazardous waste from Government property, hazardous waste manifests must be signed by personnel from the Installation Environmental Office. Do not bring hazardous waste onto Government property. Provide the Contracting Officer with a copy of waste determination documentation for any solid waste streams that have any potential to be hazardous waste or contain any chemical constituents listed in 40 CFR 372-SUBPART D.

3.7.3.2 Waste Storage/Satellite Accumulation/90 Day Storage Areas

Accumulate hazardous waste at satellite accumulation points and in compliance with 40 CFR 262.34 and applicable state or local regulations. Individual waste streams will be limited to 55 gallons of accumulation (or 1 quart for acutely hazardous wastes). If the Contractor expects to generate hazardous waste at a rate and quantity that makes satellite accumulation impractical, the Contractor may request a temporary 90 day accumulation point be established. Submit a request in writing to the Contracting Officer and provide the following information (Attach Site Plan to the Request):

Contract Number	_____
Contractor	_____
Haz/Waste or Regulated Waste POC	_____
Phone Number	_____
Type of Waste	_____
Source of Waste	_____
Emergency POC	_____
Phone Number	_____
Location of the Site	_____

Attach a Waste Determination form for the expected waste streams. Allow 10 working days for processing this request. Additional compliance requirements (e.g. training and contingency planning) that may be required are the responsibility of the Contractor. Barricade the designated area where waste is being stored and post a sign identifying as follows:

"DANGER - UNAUTHORIZED PERSONNEL KEEP OUT"

3.7.3.3 Hazardous Waste Disposal

3.7.3.3.1 Responsibilities for Contractor's Disposal

Provide hazardous waste manifest to the Installations Environmental Office for review, approval, and signature prior to shipping waste off Government property.

3.7.3.3.1.1 Services

Provide service necessary for the final treatment or disposal of the hazardous material or waste in accordance with 40 CFR 260, local, and state, laws and regulations, and the terms and conditions of the Contract within 60 days after the materials have been generated. These services include necessary personnel, labor, transportation, packaging, detailed analysis (if required for disposal or transportation, include manifesting or complete waste profile sheets, equipment, and compile documentation).

3.7.3.3.1.2 Samples

Obtain a representative sample of the material generated for each job done to provide waste stream determination.

3.7.3.3.1.3 Analysis

Analyze each sample taken and provide analytical results to the Contracting Officer. See paragraph WASTE DETERMINATION DOCUMENTATION.

3.7.3.3.1.4 Labeling

Determine the Department of Transportation's (DOT's) proper shipping names for waste (each container requiring disposal) and demonstrate to the

Contracting Officer how this determination is developed and supported by the sampling and analysis requirements contained herein. Label all containers of hazardous waste with the words "Hazardous Waste" or other words to describe the contents of the container in accordance with 40 CFR 262.31 and applicable state or local regulations.

3.7.3.4 Universal Waste Management

Manage the following categories of universal waste in accordance with federal, state, and local requirements and installation instructions:

a. Batteries as described in 40 CFR 273.2

b. Lamps as described in 40 CFR 273.5

c. Mercury-containing equipment as described in 40 CFR 273.4

d. Section 01 57 19.01 20 SUPPLEMENTAL TEMPORARY ENVIRONMENTAL CONTROLS

Mercury is prohibited in the construction of this facility, unless specified otherwise, and with the exception of mercury vapor lamps and fluorescent lamps. Dumping of mercury-containing materials and devices such as mercury vapor lamps, fluorescent lamps, and mercury switches, in rubbish containers is prohibited. Remove without breaking, pack to prevent breakage, and transport out of the activity in an unbroken condition for disposal as directed.

3.7.3.5 Electronics End-of-Life Management

Recycle or dispose of electronics waste, including, but not limited to, used electronic devices such computers, monitors, hard-copy devices, televisions, mobile devices, in accordance with 40 CFR 260-262, state, and local requirements, and installation instructions.

3.7.3.6 Disposal Documentation for Hazardous and Regulated Waste

Contact the Contracting Officer for the facility RCRA identification number that is to be used on each manifest.

Submit a copy of the applicable EPA and or state permit(s), manifest(s), or license(s) for transportation, treatment, storage, and disposal of hazardous and regulated waste by permitted facilities. Hazardous or toxic waste manifests must be reviewed, signed, and approved by the Contracting Officer before the Contractor may ship waste. To obtain specific disposal instructions, coordinate with the Installation Environmental Office. Refer to Section 01 57 19.01 20 SUPPLEMENTAL TEMPORARY ENVIRONMENTAL CONTROLS for the Installation Point of Contact information.

3.7.4 Releases/Spills of Oil and Hazardous Substances

3.7.4.1 Response and Notifications

Exercise due diligence to prevent, contain, and respond to spills of hazardous material, hazardous substances, hazardous waste, sewage, regulated gas, petroleum, lubrication oil, and other substances regulated in accordance with 40 CFR 300. Maintain spill cleanup equipment and materials at the work site. In the event of a spill, take prompt, effective action to stop, contain, curtail, or otherwise limit the amount, duration, and severity of the spill/release. In the event of any releases

of oil and hazardous substances, chemicals, or gases; immediately (within 15 minutes) notify the Installation Fire Department, the Installation Command Duty Officer, the Installation Environmental Office, the Contracting Officer and the state or local authority.

Submit verbal and written notifications as required by the federal (40 CFR 300.125 and 40 CFR 355), state, local regulations and instructions. Provide copies of the written notification and documentation that a verbal notification was made within 20 days. Spill response must be in accordance with 40 CFR 300 and applicable state and local regulations. Contain and clean up these spills without cost to the Government.

3.7.4.2 Clean Up

Clean up hazardous and non-hazardous waste spills. Reimburse the Government for costs incurred including sample analysis materials, clothing, equipment, and labor if the Government will initiate its own spill cleanup procedures, for Contractor- responsible spills, when: Spill cleanup procedures have not begun within one hour of spill discovery/occurrence; or, in the Government's judgment, spill cleanup is inadequate and the spill remains a threat to human health or the environment.

3.7.5 Mercury Materials

Immediately report to the Environmental Office and the Contracting Officer instances of breakage or mercury spillage. Clean mercury spill area to the satisfaction of the Contracting Officer.

Do not recycle a mercury spill cleanup; manage it as a hazardous waste for disposal.

3.7.6 Wastewater

3.7.6.1 Disposal of wastewater must be as specified below.

3.7.6.1.1 Treatment

Do not allow wastewater from construction activities, such as onsite material processing, concrete curing, foundation and concrete clean-up, water used in concrete trucks, and forms to enter water ways or to be discharged prior to being treated to remove pollutants. Dispose of the construction- related waste water off-Government property in accordance with 40 CFR 403, state, regional, and local laws and regulations.

3.7.6.1.2 Surface Discharge

For discharge of ground water, obtain a state or federal permit specific for pumping and discharging ground water prior to surface discharging.

3.7.6.1.3 Land Application

Water generated from the flushing of lines after disinfection or disinfection in conjunction with hydrostatic testing must be land- applied in accordance with federal, state, and local laws and regulations for land application.

3.8 HAZARDOUS MATERIAL MANAGEMENT

Include hazardous material control procedures in the Safety Plan, in accordance with Section 01 35 26 GOVERNMENTAL SAFETY REQUIREMENTS. Address procedures and proper handling of hazardous materials, including the appropriate transportation requirements. Do not bring hazardous material onto Government property that does not directly relate to requirements for the performance of this contract. Submit an SDS and estimated quantities to be used for each hazardous material to the Contracting Officer prior to bringing the material on the installation. Typical materials requiring SDS and quantity reporting include, but are not limited to, oil and latex based painting and caulking products, solvents, adhesives, aerosol, and petroleum products. Use hazardous materials in a manner that minimizes the amount of hazardous waste generated. Containers of hazardous materials must have National Fire Protection Association labels or their equivalent. Certify that hazardous materials removed from the site are hazardous materials and do not meet the definition of hazardous waste, in accordance with 40 CFR 261.

3.8.1 Contractor Hazardous Material Inventory Log

Submit the "Contractor Hazardous Material Inventory Log"(found at: http://www.wbdg.org/ccb/NAVGRAPH/graphtoc.pdf), which provides information required by (EPCRA Sections 312 and 313) along with corresponding SDS, to the Contracting Officer at the start and at the end of construction (30 days from final acceptance), and update no later than January 31 of each calendar year during the life of the contract. Keep copies of the SDSs for hazardous materials onsite. At the end of the project, provide the Contracting Officer with copies of the SDSs, and the maximum quantity of each material that was present at the site at any one time, the dates the material was present, the amount of each material that was used during the project, and how the material was used.

The Contracting Officer may request documentation for any spills or releases, environmental reports, or off-site transfers.

3.9 PREVIOUSLY USED EQUIPMENT

Clean previously used construction equipment prior to bringing it onto the project site. Equipment must be free from soil residuals, egg deposits from plant pests, noxious weeds, and plant seeds. Consult with the U.S. Department of Agriculture jurisdictional office for additional cleaning requirements.

3.10 CONTROL AND MANAGEMENT OF ASBESTOS-CONTAINING MATERIAL (ACM)

Manage and dispose of asbestos- containing waste in accordance with 40 CFR 61. Refer to Section 02 82 16.00 20 ENGINEERING CONTROL OF ASBESTOS CONTAINING MATERIALS. Manifest asbestos-containing waste and provide the manifest to the Contracting Officer. Notifications to the state and Installation Air Program Manager are required before starting any asbestos work.

3.11 CONTROL AND MANAGEMENT OF LEAD-BASED PAINT (LBP)

Manage and dispose of lead-contaminated waste in accordance with 40 CFR 745 and Section 02 82 33.13 20 REMOVAL/CONTROL AND DISPOSAL OF PAINT WITH LEAD;. Manifest any lead-contaminated waste and provide the manifest to the Contracting Officer.

3.12 CONTROL AND MANAGEMENT OF LIGHTING BALLAST AND LAMPS CONTAINING PCBS

Manage and dispose of contaminated waste in accordance with 40 CFR 761.

3.13 PETROLEUM, OIL, LUBRICANT (POL) STORAGE AND FUELING

POL products include flammable or combustible liquids, such as gasoline, diesel, lubricating oil, used engine oil, hydraulic oil, mineral oil, and cooking oil. Store POL products and fuel equipment and motor vehicles in a manner that affords the maximum protection against spills into the environment. Manage and store POL products in accordance with EPA 40 CFR 112, and other federal, state, regional, and local laws and regulations. Use secondary containments, dikes, curbs, and other barriers, to prevent POL products from spilling and entering the ground, storm or sewer drains, stormwater ditches or canals, or navigable waters of the United States. Describe in the EPP (see paragraph ENVIRONMENTAL PROTECTION PLAN) how POL tanks and containers must be stored, managed, and inspected and what protections must be provided. Storage of fuel on the project site must be in accordance with EPA, state, and local laws and regulations and paragraph OIL STORAGE INCLUDING FUEL TANKS.

3.13.1 Used Oil Management

Manage used oil generated on site in accordance with 40 CFR 279. Determine if any used oil generated while onsite exhibits a characteristic of hazardous waste. Used oil containing 1,000 parts per million of solvents is considered a hazardous waste and disposed of at the Contractor's expense. Used oil mixed with a hazardous waste is also considered a hazardous waste. Dispose in accordance with paragraph HAZARDOUS WASTE DISPOSAL.

3.13.2 Oil Storage Including Fuel Tanks

Provide secondary containment and overfill protection for oil storage tanks. A berm used to provide secondary containment must be of sufficient size and strength to contain the contents of the tanks plus 5 inches freeboard for precipitation. Construct the berm to be impervious to oil for 72 hours that no discharge will permeate, drain, infiltrate, or otherwise escape before cleanup occurs. Use drip pans during oil transfer operations; adequate absorbent material must be onsite to clean up any spills and prevent releases to the environment. Cover tanks and drip pans during inclement weather. Provide procedures and equipment to prevent overfilling of tanks. If tanks and containers with an aggregate aboveground capacity greater than 1320 gallons will be used onsite (only containers with a capacity of 55 gallons or greater are counted), provide and implement a SPCC plan meeting the requirements of 40 CFR 112. Do not bring underground storage tanks to the installation for Contractor use during a project. Submit the SPCC plan to the Contracting Officer for approval.

Monitor and remove any rainwater that accumulates in open containment dikes or berms. Inspect the accumulated rainwater prior to draining from a containment dike to the environment, to determine there is no oil sheen present.

3.14 INADVERTENT DISCOVERY OF PETROLEUM-CONTAMINATED SOIL OR HAZARDOUS WASTES

If petroleum-contaminated soil, or suspected hazardous waste is found during construction that was not identified in the Contract documents, immediately notify the Contracting Officer. Do not disturb this material until authorized by the Contracting Officer.

3.15 CHLORDANE

Evaluate excess soils and concrete foundation debris generated during the demolition of housing units or other wooden structures for the presence of chlordane or other pesticides prior to reuse or final disposal.

3.16 SOUND INTRUSION

Make the maximum use of low-noise emission products, as certified by the EPA. Blasting or use of explosives are not permitted without written permission from the Contracting Officer, and then only during the designated times. Confine pile-driving operations to the period between 8 a.m. and 4 p.m., Monday through Friday, exclusive of holidays, unless otherwise specified.

Keep construction activities under surveillance and control to minimize environment damage by noise. Comply with the provisions of the State of North Carolina rules.

3.17 POST CONSTRUCTION CLEANUP

Clean up areas used for construction in accordance with Contract Clause: "Cleaning Up". Unless otherwise instructed in writing by the Contracting Officer, remove traces of temporary construction facilities such as haul roads, work area, structures, foundations of temporary structures, stockpiles of excess or waste materials, and other vestiges of construction prior to final acceptance of the work. Grade parking area and similar temporarily used areas to conform with surrounding contours.

-- End of Section --

SECTION 01 58 00

PROJECT IDENTIFICATION
09/15

PART 1 GENERAL

1.1 REFERENCES

The publications listed below form a part of this specification to the extent referenced. The publications are referred to within the text by the basic designation only.

AMERICAN WOOD PROTECTION ASSOCIATION (AWPA)

AWPA C1	(2003) All Timber Products - Preservative Treatment by Pressure Processes
AWPA C2	(2003) Lumber, Timber, Bridge Ties and Mine Ties - Preservative Treatment by Pressure Processes

1.2 SUBMITTALS

Government approval is required for submittals with a "G" designation; submittals not having a "G" designation are for Contractor Quality Control approval. The following shall be submitted in accordance with Section 01 33 00 SUBMITTAL PROCEDURES:

SD-02 Shop Drawings

Preliminary Drawing Indicating Layout And Text Content; G

1.3 PROJECT SIGN

Prior to initiating any work on site, provide one project identification sign at the location designated. Construct the sign in accordance with project sign detail attached at the end of this section. Maintain sign throughout the life of the project. Upon completion of the project, remove the sign from the site.

1.3.1 Project Identification Signboard (Navy)

A project identification signboard shall be provided in accordance with the attached Plates. Provide Preliminary Drawing indicating layout and text content.The signboard shall be provided at a conspicuous location on the job site where directed by the Contracting Officer.

a. The field of the sign shall consist of a 4 by 8 foot sheet of grade B-B medium density overlaid exterior plywood.

b. Lumber shall be B or better Southern pine, pressure-preservative treated in accordance with AWPA C1 and AWPA C2. Nails shall be aluminum or galvanized steel.

c. The entire signboard and supports shall be given one coat of exterior alkyd primer and two coats of exterior alkyd enamel paint. The lettering and sign work shall be performed by a skilled sign painter

using paint known in the trade as bulletin colors. The colors, lettering sizes, and lettering styles shall be as indicated. Where preservative-treated lumber is required, utilize only cured pressure-treated wood which has had the chemicals leached from the surface of the wood prior to painting.

d. Use spray applied automotive quality high gloss acrylic white enamel paint as background for the NAVFAC logo. NAVFAC logo shall be an applied 2 millimeter film sticker/decal with either transparent or white background or paint the logo by stencil onto the sign. The weather resistant sticker/decal film shall be rated for a minimum of 2-year exterior vertical exposure. The self-adhering sticker shall be mounted to the sign with pressure sensitive, permanent acrylic adhesive. Shop cut sticker/decal to rectangular shape and provide pull-off backing sheet on adhesive side of design sticker for shipping.

e. Sign paint colors (manufacturer's numbers/types listed below for color identification only)

(1) Blue = To match dark blue color in the NAVFAC logo.

(2) White = To match Brilliant White color in the NAVFAC logo.

f. NAVFAC logo must retain proportions and design integrity. NAVFAC logos in electronic format may be obtained from the NAVFAC web portal via the following link: http://www.flickr.com/photos/navfac/sets/72157627315803197/with/6045913859/. Use the following to choose color values for the paint to be used:

(1) Dark Blue = equivalent to CMYK values 100, 72, 0, 8.

(2) Light Blue = equivalent to CMYK values 69, 34, 0, 0.

(3) Cyan = equivalent to CMYK values 100, 9, 0, 6.

(4) Yellow = equivalent to CMYK values 0.9,94, 0.

PART 2 PRODUCTS

Not Used.

PART 3 EXECUTION

Not Used.

-- End of Section --

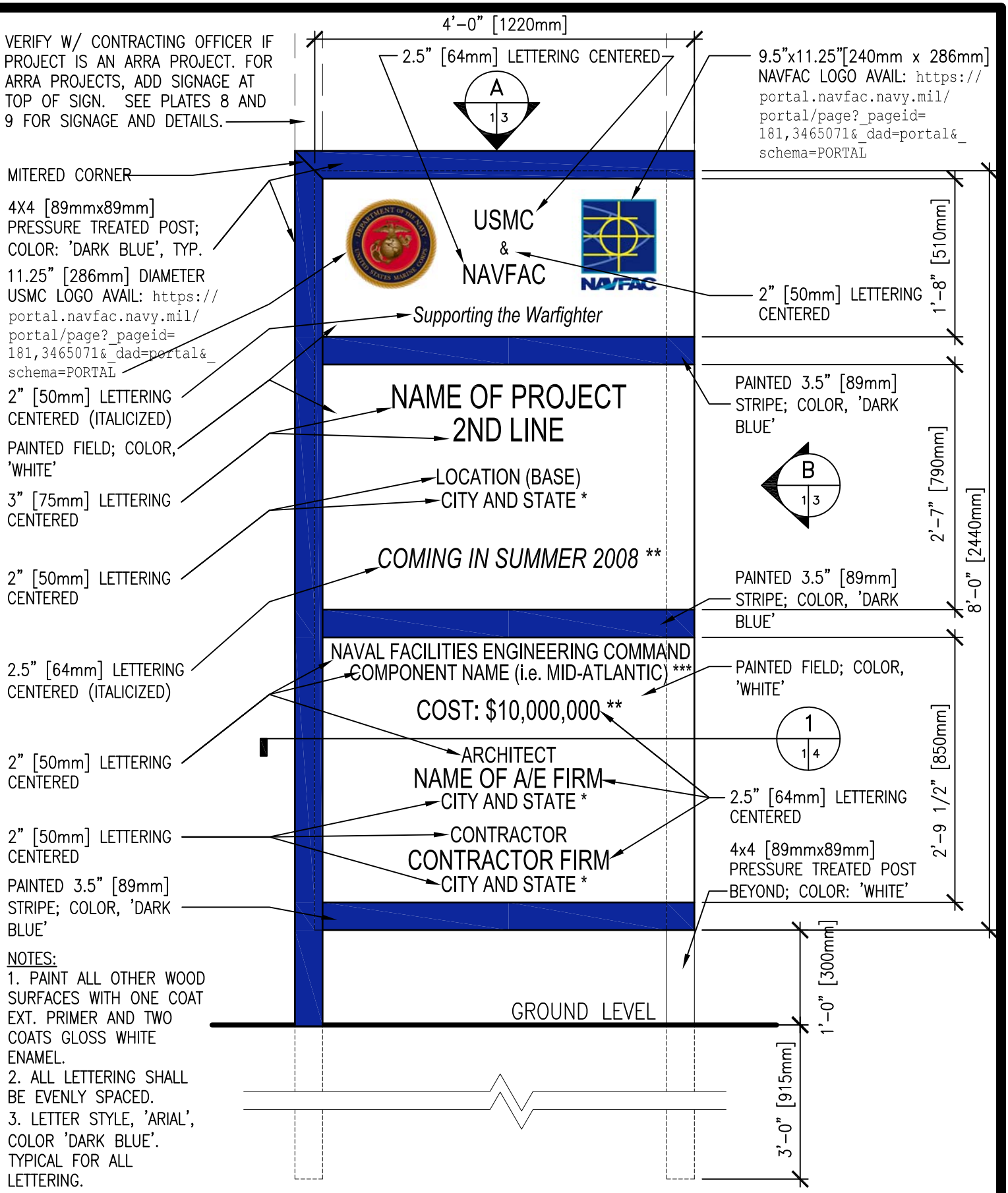

NOTES:
1. PAINT ALL OTHER WOOD SURFACES WITH ONE COAT EXT. PRIMER AND TWO COATS GLOSS WHITE ENAMEL.
2. ALL LETTERING SHALL BE EVENLY SPACED.
3. LETTER STYLE, 'ARIAL', COLOR 'DARK BLUE'. TYPICAL FOR ALL LETTERING.
*–ABBREVIATE STATE
**–CONFIRM USE WITH CONTRACTING OFFICER
***–VERIFY NAME WITH CONTRACTING OFFICER.

PROJECT IDENTIFICATION SIGNBOARD FOR MARINE CORPS PROJECTS

SCALE: 3/4" = 1'-0"

PLATE 1MC

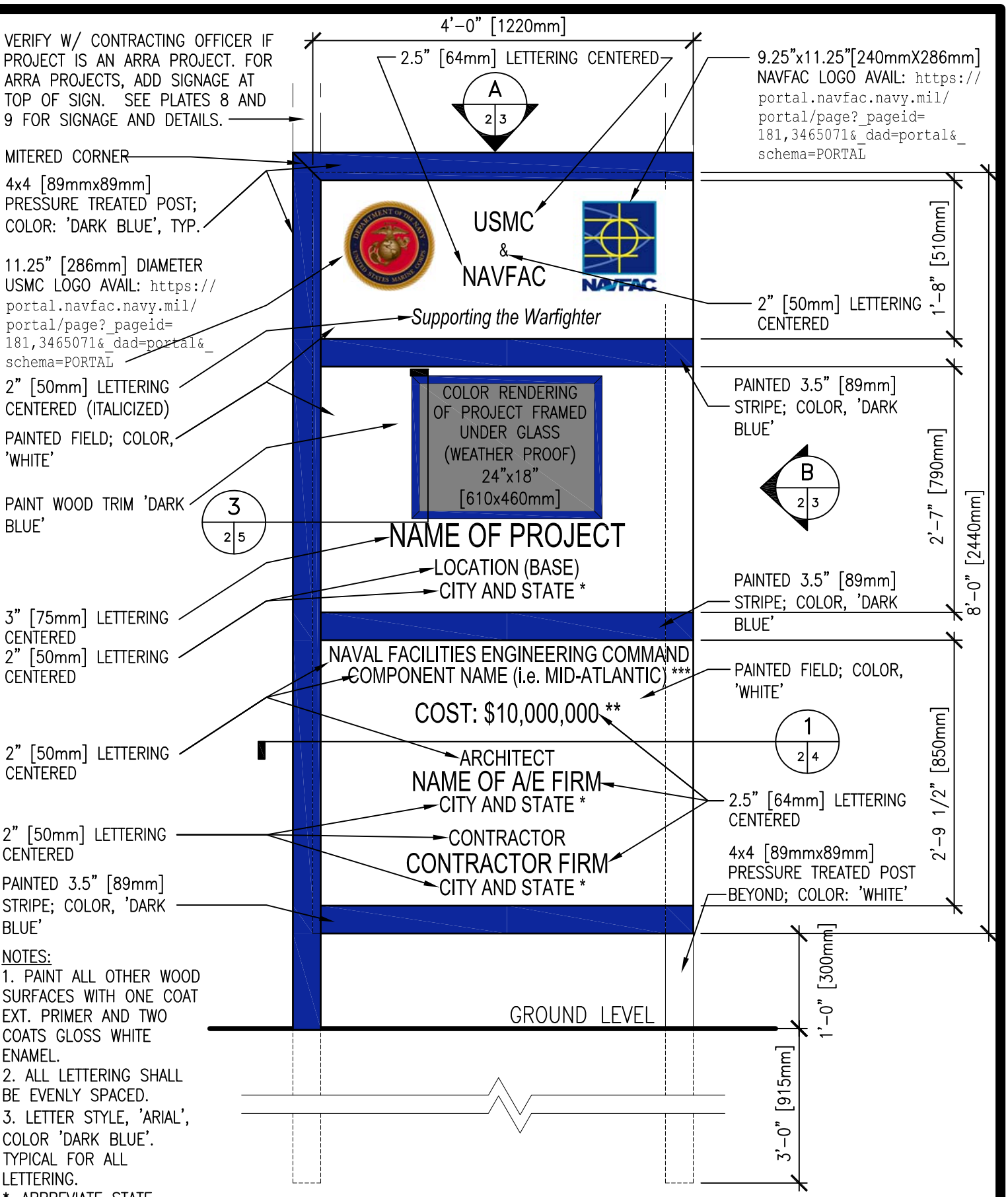

NOTES:
1. PAINT ALL OTHER WOOD SURFACES WITH ONE COAT EXT. PRIMER AND TWO COATS GLOSS WHITE ENAMEL.
2. ALL LETTERING SHALL BE EVENLY SPACED.
3. LETTER STYLE, 'ARIAL', COLOR 'DARK BLUE'. TYPICAL FOR ALL LETTERING.

*–ABBREVIATE STATE
**–CONFIRM USE WITH CONTRACTING OFFICER
***–VERIFY NAME WITH CONTRACTING OFFICER.

PROJECT IDENTIFICATION SIGNBOARD FOR MARINE CORPS PROJECTS

SCALE: 3/4" = 1'-0"

PLATE 2MC

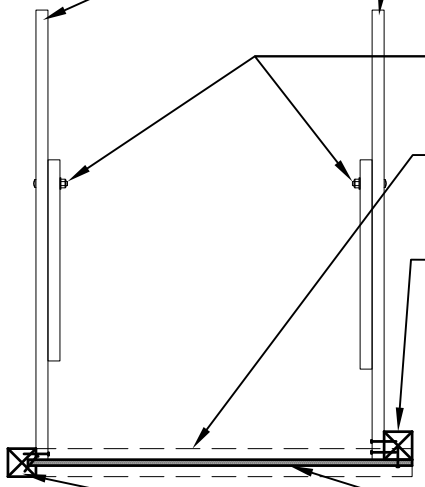

A 1,2 3

TOP VIEW

SCALE: 1/2" = 1'-0"

NOTES:
1. POSTS AND BRACES SHALL BE PRESSURE TREATED.
2. ALL FASTENERS SHALL BE ZINC COATED.
3. BRACING IS REQUIRED IN ALL SOIL CONDITIONS AND HIGH WIND ENVIRONMENTS.

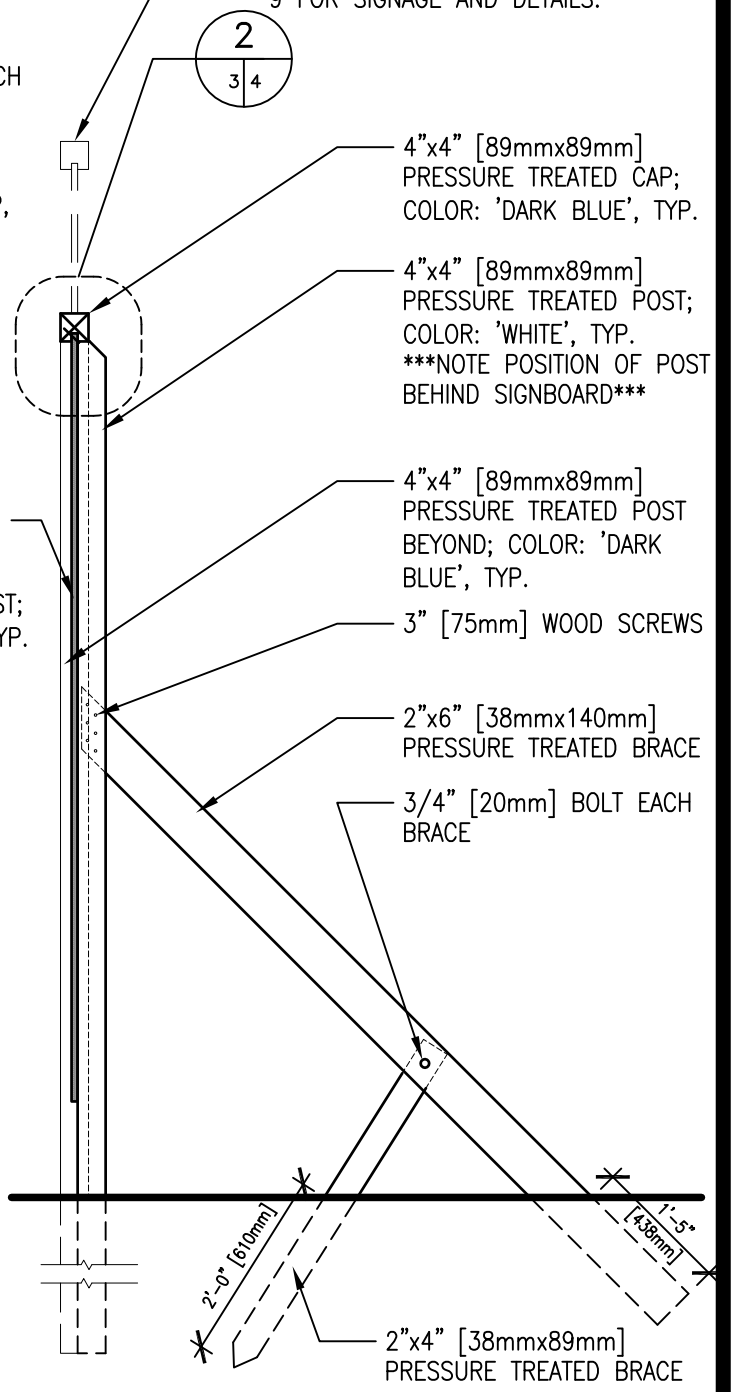

B 1,2 3

SIDE VIEW

SCALE: 1/2" = 1'-0"

PROJECT IDENTIFICATION SIGNBOARD SUPPORT DETAILS

PLATE 3

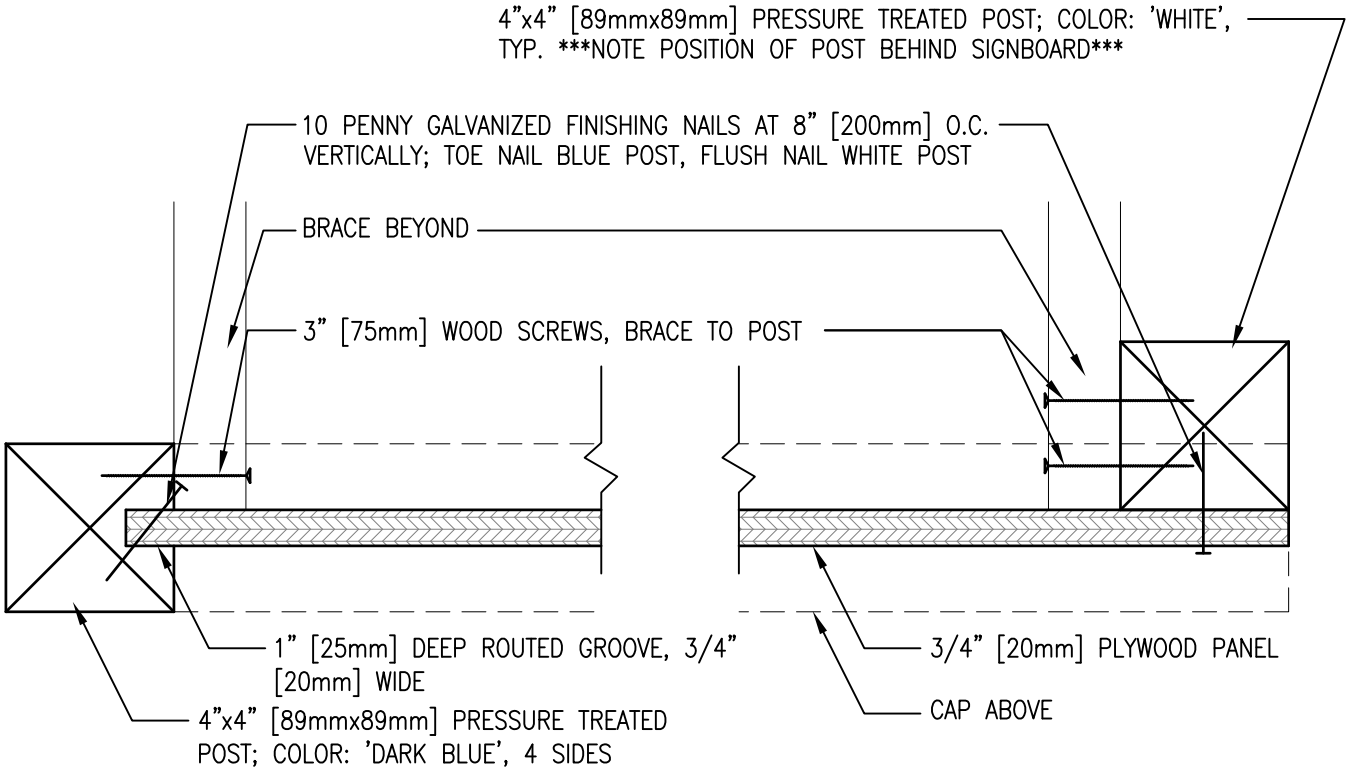

1 PLAN SECTION

1,2 | 4

SCALE: 3" = 1'-0"

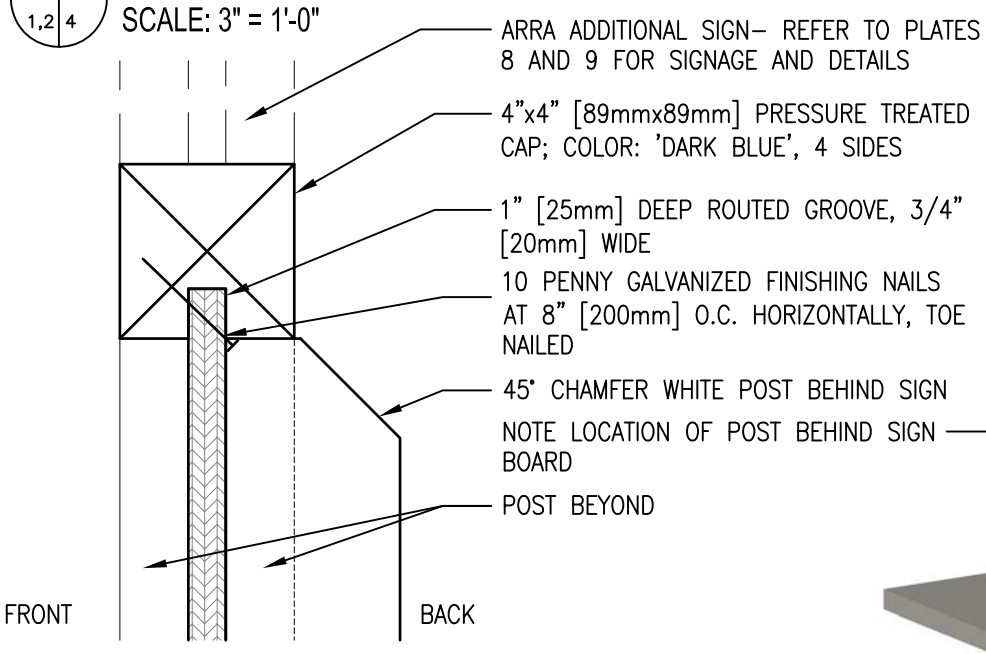

2 SECTION AT TOP

1,2 | 4

SCALE: 3" = 1'-0"

3 ISO VIEW

2 | 4

SCALE: NONE

PROJECT IDENTIFICATION SIGNBOARD SECTIONS

PLATE 4

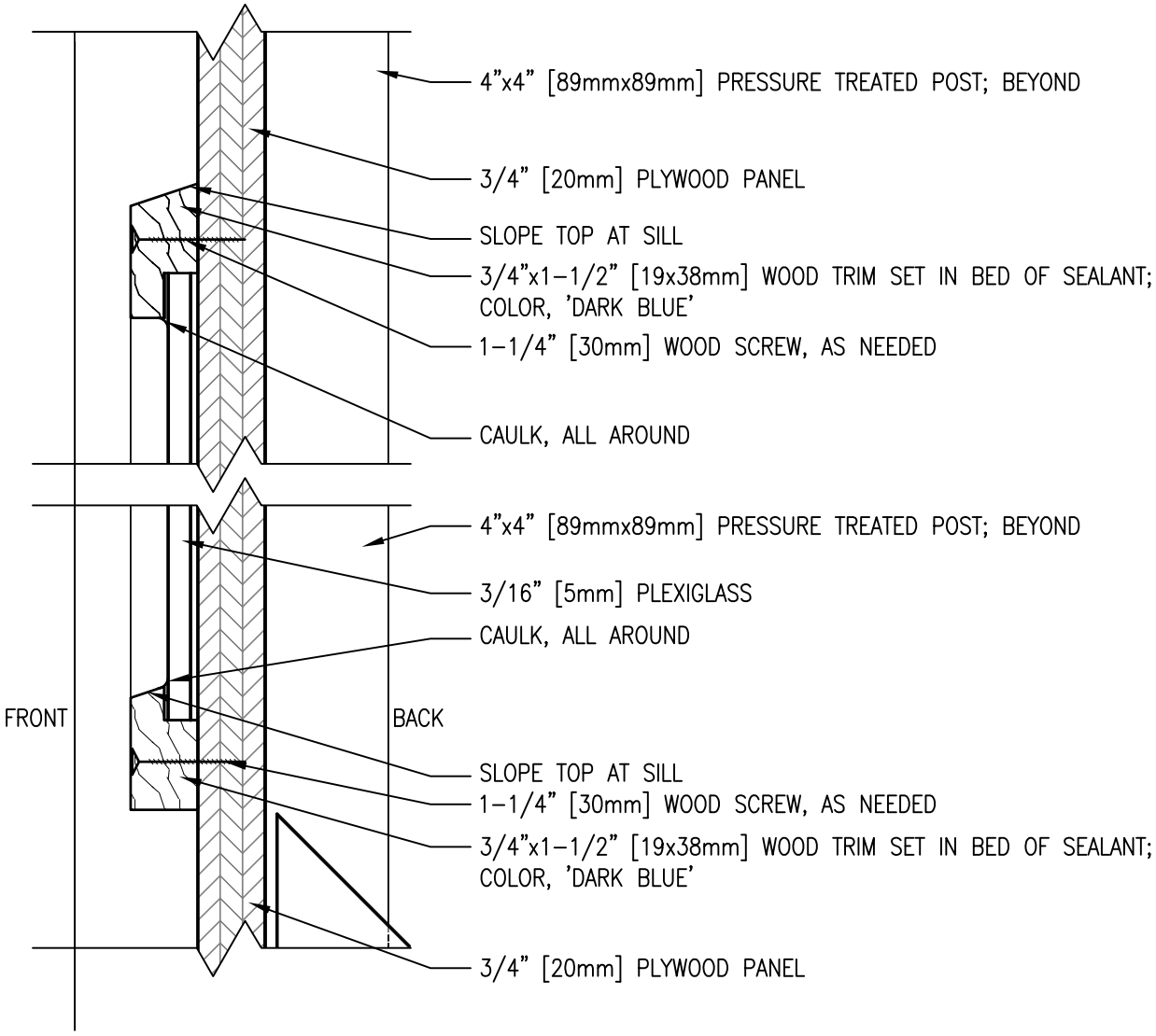

3
2 5

SECTION AT RENDERING FRAME

SCALE: 6" = 1'-0"

PROJECT IDENTIFICATION SIGNBOARD SECTION

PLATE 5

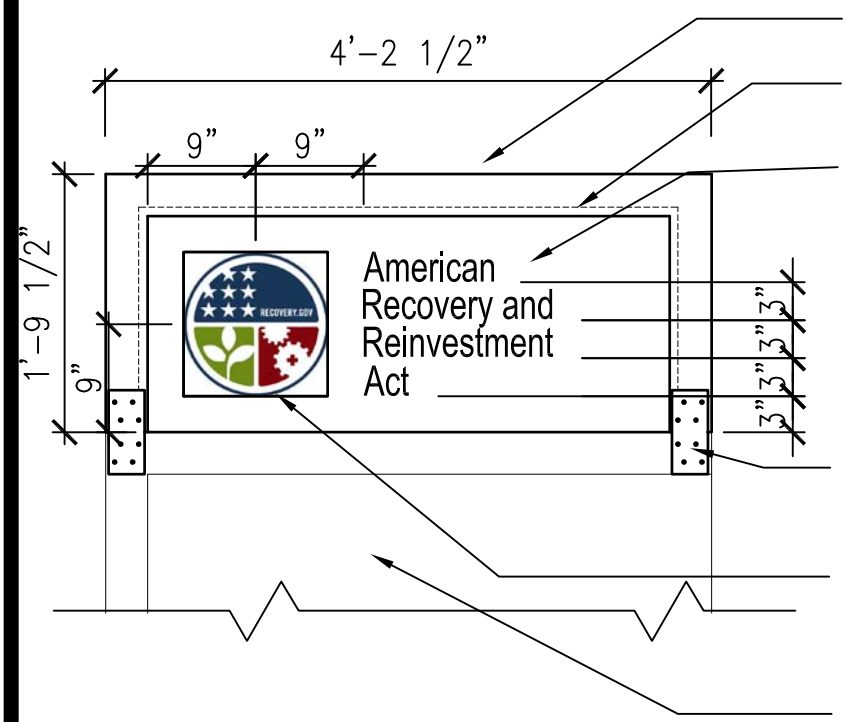

4"x4" [89mmx89mm] PRESSURE TREATED FRAME– PAINT BLUE TO MATCH PROJECT SIGN.

3/4" [20mm] PLYWOOD PANEL– PAINT WHITE TO MATCH PROJECT SIGN.

2" [51mm] HIGH LETTERING, PAINTED TO MATCH NAVY COLOR IN LOGOMARK. REFER TO "GENERAL GUIDELINES FOR EMBLEM AND LOGO APPLICATIONS" AT WWW.RECOVERY.GOV

2 / 8 8

3"x7"x1/8" [76mmx178mmx3mm] GALV. PLATE ANCHORED TO FRAME WITH 8– 2" X #10 GALVANIZED SCREWS. TYP. FOR BOTH FRONT AND BACK OF EACH POST. PAINT DARK BLUE TO MATCH POST.

12"DIA. [305mm] ARRA LOGOMARK– REFER TO "GENERAL GUIDELINES FOR EMBLEM AND LOGO APPLICATIONS" AT WWW.RECOVERY.GOV

STANDARD CONSTRUCTION PROJECT SIGN. REFER TO OTHER PLATES FOR DETAILS.

1 / 8 8 FRONT ELEVATION

SCALE: 3/4" = 1'-0"

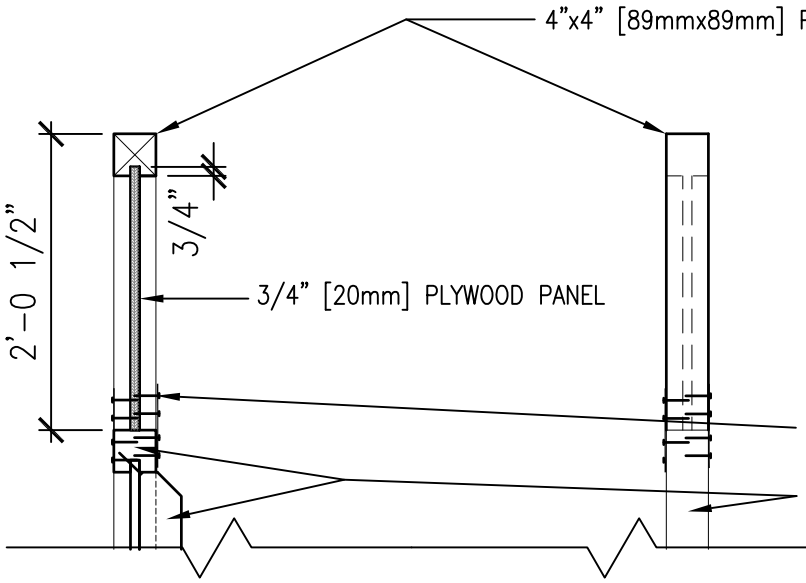

1 / 8 8

3"x7"x1/8" [76mmx178mmx3mm] GALV. PLATE ANCHORED TO FRAME WITH 8– 2" X #10 GALVANIZED SCREWS. TYP. FOR BOTH FRONT AND BACK OF EACH POST.

STANDARD CONSTRUCTION PROJECT SIGN. REFER TO OTHER PLATES FOR DETAILS.

2 / 8 8 SECTION / END ELEVATION

SCALE: 3/4" = 1'-0"

ARRA PROJECT SIGNBOARD DRAWINGS

COLOR NOTE

ALL COLORS IN THE ARRA LOGOS HAVE PRECISE COLOR REFERENCES, SHOWN IN THE COLOR SCHEDULE CHART SHOWN BELOW. ALWAYS USE THE EXACT COLOR VALUES LISTED. DO NOT USE SCREENS OR TINTS OF ANY OF THE COLORS FOR ANY PART OF THE LOGO. THE CYMK VALUES SHOULD BE USED FOR PRINT APPLICATIONS. THE RGB AND HEX# VALUES SHOULD BE USED FOR ON-SCREEN APPLICATIONS.

COLOR SCHEDULE			
COLOR	CMYK	RGB	HEX#
NAVY	00/00/00/00	0/51/102	003366
RED	30/100/100/50	102/0/0	660000
GREEN	65/25/100/7	103/144/62	67903E
LIGHT BLUE	67/37/6/00	89/141/192	598DC0

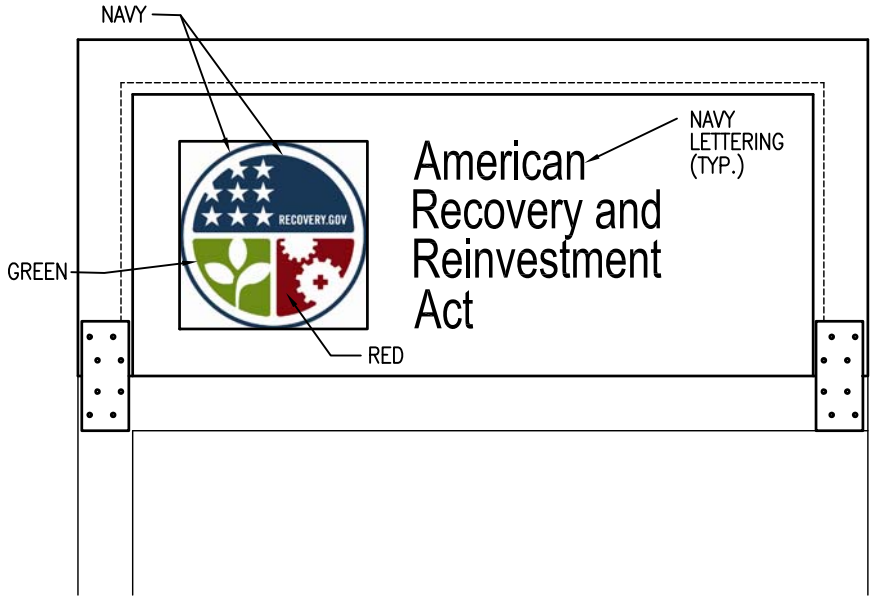

SEE ARRA PLATE 8 FOR DIMENSIONS OF SIGNAGE AND GRAPHICS.

ARRA PROJECT SIGNBOARD DRAWING

THIS PAGE HAS BEEN INTENTIONALLY LEFT BLANK

SECTION 01 60 00.00 22

REQUIREMENTS FOR PESTICIDE AND HERBICIDE COORDINATION
08/16

PART 1 GENERAL

1.1 SUBMITTALS

Government approval is required for submittals with a "G" designation; submittals not having a "G" designation are for Contractor Quality Control approval. Submit the following in accordance with Section 01 33 00 SUBMITTAL PROCEDURES:

SD-07 Certificates

Certificate of State Licensed Applicator; G

SD-11 Closeout Submittals

Completed Field Pesticide/Herbicide Management Record Form; G

1.2 QUALITY ASSURANCE

1.2.1 Certificate of State Licensed Applicator

A State licensed applicator is required and must be licensed in the state in which the project is located. Submit a copy of the certificate(s) to the Base Pest Management Coordinator (PMC) through the Contracting Officer.

PART 2 PRODUCTS

2.1 PESTICIDE/HERBICIDE LIST

Comply with Base Regulations and use only approved pesticides/herbicides listed on the current "Base Approved Pesticide/herbicide List". Use the approved list that is current at the time of application. Contact the Contracting Officer to obtain the current approved list.

PART 3 EXECUTION

3.1 COORDINATION WITH BASE PEST MANAGEMENT COORDINATOR (PMC)

Coordinate with the PMC before proceeding with any pesticide/herbicide application. The Point of Contact information for the Base Pest Management Coordinator can be obtained from the Contracting Officer.

3.2 Field Pesticide/Herbicide Management Record Form

Following the pesticide/herbicide application, complete the attached Field Pesticide/Herbicide Management Record Form and submit to the Base Pest Management Coordinator (PMC) through the Contracting Officer. Submit the completed form(s) within 15 days after application.

-- End of Section --

J-1503020-05

FIELD **PESTICIDE/HERBICIDE** MANAGEMENT RECORD FORM

Revised 24 October 2012

PROJECT / CONTRACT #:_____

Instructions: **A separate form will be filled out for EACH formulation at EACH location or building (if treating inside AND outside of a building, need two separate forms)**.

1. Date of Application:_____

2. Location: (Circle One) Inside or Outside

3. Building# and/or Name:_____

4. Type of Pest Control Operation:_____
   (i.e. Baiting, Power spray, Manual application of pesticide, ULV, etc.)

5. Site Description:_____
   (i.e. Office, Barracks, Housing, Warehouse, Snack Bar, Lawn, Unimproved Grounds, etc.)

6. Pest type: _____
   (i.e. Ants, Fire Ants, Cockroaches, Spiders, Termites, etc.)

7. **Contractor/Subcontractor's Company Name:_____**

8. Pesticide Used:
   8a. Pesticide Trade Name: _____

   8b. Pesticide Active Ingredient:_____

   8c. EPA Registration#:_____

   8d. Formulation (e.g., Liquid, Granular, Gel, EC, Aerosol, etc.)_____

9. Approximate total area treated: _____
   9a. Units: _____(i.e. SF, LF, AC, CF, EA(for baiting, aerosol cans), etc.)

10. Quantity of **Pesticide Concentrate** applied:_____
    10a. Units: _____(i.e. FLoz, DRoz, LB, Gal, Qt, Pint, Pkt, Bait Block, Bait Stations, Briquet, ML, LT, etc.)

11. **Quantity of Dilutant** Applied (if applicable):
    11a. **Type of Dilutant**: _____ (i.e. Water, Oil, etc.)
    11b. **Units**: _____ (i.e. Floz, Gal, LT, ML, etc.)

12. Comments: (Survey results, wind conditions, sanitation deficiencies, etc.)

_____

13. Print & Signature of Applicator:_____

14. Certification # of Applicator: _____

SECTION 01 74 19

CONSTRUCTION AND DEMOLITION WASTE MANAGEMENT
09/15

PART 1 GENERAL

1.1 GOVERNMENT POLICY

Government policy is to apply sound environmental principles in the design, construction and use of facilities. As part of the implementation of that policy the Contractor shall: (1) practice efficient waste management when sizing, cutting, and installing products and materials and (2) use all reasonable means to divert construction and demolition waste from landfills and incinerators and to facilitate their recycling or reuse. A minimum of 50 percent by weight of total project solid waste shall be diverted from the landfill.

1.2 MANAGEMENT

Develop and implement a waste management program. Take a pro-active, responsible role in the management of construction and demolition waste and require all subcontractors, vendors, and suppliers to participate in the effort. Construction and demolition waste includes products of demolition or removal, excess or unusable construction materials, packaging materials for construction products, and other materials generated during the construction process but not incorporated into the work. In the management of waste consideration shall be given to the availability of viable markets, the condition of the material, the ability to provide the material in suitable condition and in a quantity acceptable to available markets, and time constraints imposed by internal project completion mandates. The Contractor is responsible for implementation of any special programs involving rebates or similar incentives related to recycling of waste. Revenues or other savings obtained for salvage, or recycling accrue to the Contractor. Appropriately permit firms and facilities used for recycling, reuse, and disposal for the intended use to the extent required by federal, state, and local regulations. Also, provide on-site instruction of appropriate separation, handling, recycling, salvage, reuse, and return methods to be used by all parties at the appropriate stages of the project.

1.3 SUBMITTALS

Government approval is required for submittals with a "G" designation; submittals not having a "G" designation are for Contractor Quality Control approval. The following shall be submitted in accordance with Section 01 33 00 SUBMITTAL PROCEDURES:

SD-01 Preconstruction Submittals

Waste Management Plan; G

SD-11 Closeout Submittals

Records; G

1.4 MEETINGS

Conduct Construction Waste Management meetings. After award of the Contract and prior to commencement of work, schedule and conduct a meeting with the Contracting Officer to discuss the proposed Waste Management Plan and to develop a mutual understanding relative to the details of waste management. The requirements for this meeting may be fulfilled during the coordination and mutual understanding meeting outlined in Section 01 45 00.00 20 QUALITY CONTROL. At a minimum, environmental and waste management goals and issues shall be discussed at the following additional meetings:

a. Pre-bid meeting.

b. Preconstruction meeting.

c. Regular site meetings.

d. Work safety meetings.

1.5 WASTE MANAGEMENT PLAN

A waste management plan shall be submitted within 30 days after notice to proceed and not less than 10 days before the preconstruction meeting. The plan shall demonstrate how the project waste diversion goal shall be met and shall include the following:

a. Name of individuals on the Contractor's staff responsible for waste prevention and management.

b. Actions that will be taken to reduce solid waste generation, including coordination with subcontractors to ensure awareness and participation.

c. Description of the regular meetings to be held to address waste management.

d. Description of the specific approaches to be used in recycling/reuse of the various materials generated, including the areas on site and equipment to be used for processing, sorting, and temporary storage of wastes.

e. Characterization, including estimated types and quantities, of the waste to be generated.

f. Name of landfill and/or incinerator to be used and the estimated costs for use, assuming that there would be no salvage or recycling on the project.

g. Identification of local and regional reuse programs, including non-profit organizations such as schools, local housing agencies, and organizations that accept used materials such as materials exchange networks and Habitat for Humanity. Include the name, location, and phone number for each reuse facility to be used, and provide a copy of the permit or license for each facility.

h. List of specific waste materials that will be salvaged for resale, salvaged and reused on the current project, salvaged and stored for reuse on a future project, or recycled. Recycling facilities that will be used shall be identified by name, location, and phone number,

including a copy of the permit or license for each facility.

i. Identification of materials that cannot be recycled/reused with an explanation or justification, to be approved by the Contracting Officer.

j. Description of the means by which any waste materials identified in item (h) above will be protected from contamination.

k. Description of the means of transportation of the recyclable materials (whether materials will be site-separated and self-hauled to designated centers, or whether mixed materials will be collected by a waste hauler and removed from the site).

l. Anticipated net cost savings determined by subtracting Contractor program management costs and the cost of disposal from the revenue generated by sale of the materials and the incineration and/or landfill cost avoidance.

Revise and resubmit Plan as required by the Contracting Officer. Approval of Contractor's Plan will not relieve the Contractor of responsibility for compliance with applicable environmental regulations or meeting project cumulative waste diversion requirement. Distribute copies of the Waste Management Plan to each subcontractor, the Quality Control Manager, and the Contracting Officer.

1.6 RECORDS

Records shall be maintained to document the quantity of waste generated; the quantity of waste diverted through sale, reuse, or recycling; and the quantity of waste disposed by landfill or incineration. Quantities may be measured by weight or by volume, but must be consistent throughout. List each type of waste separately noting the disposal or diversion date. Identify the landfill, recycling center, waste processor, or other organization used to process or receive the solid waste. Provide explanations for any waste not recycled or reused. With each application for payment, submit updated documentation for solid waste disposal and diversion, and submit manifests, weight tickets, receipts, and invoices specifically identifying the project and waste material. The records shall be made available to the Contracting Officer during construction, and a copy of the records shall be delivered to the Contracting Officer upon completion of the construction.

1.7 COLLECTION

Separate, store, protect, and handle at the site identified recyclable and salvageable waste products in a manner that maximizes recyclability and salvagability of identified materials. Provide the necessary containers, bins and storage areas to facilitate effective waste management and clearly and appropriately identify them. Provide materials for barriers and enclosures around recyclable material storage areas which are nonhazardous and recyclable or reusable. Locate out of the way of construction traffic. Provide adequate space for pick-up and delivery and convenience to subcontractors. Recycling and waste bin areas are to be kept neat and clean, and recyclable materials shall be handled to prevent contamination of materials from incompatible products and materials. Clean contaminated materials prior to placing in collection containers. Use cleaning materials that are nonhazardous and biodegradable. Handle hazardous waste and hazardous materials in accordance with applicable

regulations. Separate materials by one of the following methods:

1.7.1 Source Separated Method.

Waste products and materials that are recyclable shall be separated from trash and sorted as described below into appropriately marked separate containers and then transported to the respective recycling facility for further processing. Deliver materials in accordance with recycling or reuse facility requirements (e.g., free of dirt, adhesives, solvents, petroleum contamination, and other substances deleterious to the recycling process). Separate materials into the following category types as appropriate to the project waste and to the available recycling and reuse programs in the project area:

a. Land clearing debris.

b. Asphalt.

c. Concrete and masonry.

d. Metal (e.g. banding, stud trim, ductwork, piping, rebar, roofing, other trim, steel, iron, galvanized, stainless steel, aluminum, copper, zinc, lead brass, bronze).

(1) Ferrous.

(2) Non-ferrous.

e. Wood (nails and staples allowed).

f. Debris.

g. Glass (colored glass allowed).

h. Paper.

(1) Bond.

(2) Newsprint.

(3) Cardboard and paper packaging materials.

i. Plastic.

(1) Type 1: Polyethylene Terephthalate (PET, PETE).

(2) Type 2: High Density Polyethylene (HDPE).

(3) Type 3: Vinyl (Polyvinyl Chloride or PVC).

(4) Type 4: Low Density Polyethylene (LDPE).

(5) Type 5: Polypropylene (PP).

(6) Type 6: Polystyrene (PS).

(7) Type 7: Other. Use of this code indicates that the package in question is made with a resin other than the six listed above, or is made of more than one resin listed above, and used in a

multi-layer combination.

j. Gypsum.

k. Non-hazardous paint and paint cans.

l. Carpet.

m. Ceiling tiles.

n. Insulation.

o. Beverage containers.

1.7.2 Co-Mingled Method

Waste products and recyclable materials shall be placed into a single container and then transported to a recycling facility where the recyclable materials are sorted and processed.

1.7.3 Other Methods

Other methods proposed by the Contractor may be used when approved by the Contracting Officer.

1.8 DISPOSAL

Control accumulation of waste materials and trash. Recycle or dispose of collected materials off-site at intervals approved by the Contracting Officer and in compliance with waste management procedures. Except as otherwise specified in other sections of the specifications, disposal shall be in accordance with the following:

1.8.1 Reuse

First consideration shall be given to salvage for reuse since little or no re-processing is necessary for this method, and less pollution is created when items are reused in their original form. Coordinate reuse with the Contracting Officer. Reuse materials as indicated on the drawings. Sale or donation of waste suitable for reuse shall be considered.

1.8.2 Recycle

Waste materials not suitable for reuse, but having value as being recyclable, shall be made available for recycling. All fluorescent lamps, HID lamps, and mercury-containing thermostats removed from the site shall be recycled. Arrange for timely pickups from the site or deliveries to recycling facilities in order to prevent contamination of recyclable materials.

1.8.3 Waste

Materials with no practical use or economic benefit shall be disposed at a landfill or incinerator.

1.8.4 Return

Set aside and protect misdelivered and substandard products and materials and return to supplier for credit.

PART 2 PRODUCTS

Not used.

PART 3 EXECUTION

Not used.

-- End of Section --

SECTION 01 78 00

CLOSEOUT SUBMITTALS
08/11

PART 1 GENERAL

1.1 REFERENCES

The publications listed below form a part of this specification to the extent referenced. The publications are referred to within the text by the basic designation only.

ASTM INTERNATIONAL (ASTM)

ASTM E1971	(2005; R 2011) Stewardship for the Cleaning of Commercial and Institutional Buildings

GREEN SEAL (GS)

GS-37	(2012) Cleaning Products for Industrial and Institutional Use

U.S. DEPARTMENT OF DEFENSE (DOD)

FC 1-300-09N	(2014) Navy and Marine Corps Design Procedures

1.2 DEFINITIONS

1.2.1 As-Built Drawings

As-built drawings are developed and maintained by the Contractor and depict actual conditions, including deviations from the Contract Documents. These deviations and additions may result from coordination required by, but not limited to: contract modifications; official responses to Contractor submitted Requests for Information; direction from the Contracting Officer; designs which are the responsibility of the Contractor, and differing site conditions. Maintain the as-builts throughout construction as red-lined hard copies on site. As-built drawings are further defined in NFAS 5252.236-9310. These files serve as the basis for the creation of the record drawings.

1.2.2 Record Drawings

The record drawings are the final compilation of actual conditions reflected in the as-built drawings.

1.3 SOURCE DRAWING FILES

Request the full set of electronic drawings, in the source format, for Record Drawing preparation, after award and at least 30 days prior to required use.

1.3.1 Terms and Conditions

Data contained on these electronic files must not be used for any purpose other than as a convenience in the preparation of construction data for the referenced project. Any other use or reuse shall be at the sole risk of the Contractor and without liability or legal exposure to the Government. The Contractor must make no claim and waives to the fullest extent permitted by law, any claim or cause of action of any nature against the Government, its agents or sub consultants that may arise out of or in connection with the use of these electronic files. The Contractor must, to the fullest extent permitted by law, indemnify and hold the Government harmless against all damages, liabilities or costs, including reasonable attorney's fees and defense costs, arising out of or resulting from the use of these electronic files.

These electronic CAD drawing files are not construction documents. Differences may exist between the CAD files and the corresponding construction documents. The Government makes no representation regarding the accuracy or completeness of the electronic CAD files, nor does it make representation to the compatibility of these files with the Contractor hardware or software. In the event that a conflict arises between the signed and sealed construction documents prepared by the Government and the furnished Source drawing files, the signed and sealed construction documents govern. The Contractor is responsible for determining if any conflict exists. Use of these Source Drawing files does not relieve the Contractor of duty to fully comply with the contract documents, including and without limitation, the need to check, confirm and coordinate the work of all contractors for the project. If the Contractor uses, duplicates or modifies these electronic source drawing files for use in producing construction data related to this contract, remove all previous indicia of ownership (seals, logos, signatures, initials and dates).

1.4 SUBMITTALS

Government approval is required for submittals with a "G" designation; submittals not having a "G" designation are for information only. When used, a designation following the "G" designation identifies the office that will review the submittal for the Government. Submittals with an "S" are for inclusion in the Sustainability Notebook, in conformance to Section 01 33 29 SUSTAINABILITY REPORTING. Submit the following in accordance with Section 01 33 00 SUBMITTAL PROCEDURES:

SD-03 Product Data

Warranty Management Plan
Warranty Tags
Final Cleaning
Spare Parts Data

SD-08 Manufacturer's Instructions

Posted Instructions

SD-10 Operation and Maintenance Data

Operation and Maintenance Manuals; G

SD-11 Closeout Submittals

As-Built Drawings; G
Record Drawings; G
As-Built Record of Equipment and Materials
Final Approved Shop Drawings
Construction Contract Specifications
Certification of EPA Designated Items; G
Interim DD FORM 1354; G
Checklist for DD FORM 1354; G
NAVFAC Sustainable & Energy Data Record Card; G

1.5 SPARE PARTS DATA

Submit two copies of the Spare Parts Data list.

a. Indicate manufacturer's name, part number, nomenclature, and stock level required for maintenance and repair. List those items that may be standard to the normal maintenance of the system.

1.6 WARRANTY MANAGEMENT

1.6.1 Warranty Management Plan

Develop a warranty management plan which contains information relevant to the clause Warranty of Construction. At least 30 days before the planned pre-warranty conference, submit four sets of the warranty management plan. Include within the warranty management plan all required actions and documents to assure that the Government receives all warranties to which it is entitled. The plan must be in narrative form and contain sufficient detail to render it suitable for use by future maintenance and repair personnel, whether tradesmen, or of engineering background, not necessarily familiar with this contract. The term "status" as indicated below must include due date and whether item has been submitted or was accomplished. Warranty information made available during the construction phase must be submitted to the Contracting Officer for approval prior to each monthly pay estimate. Assemble approved information in a binder and turn over to the Government upon acceptance of the work. The construction warranty period will begin on the date of project acceptance and continue for the full product warranty period. A joint 4 month and 9 month warranty inspection will be conducted, measured from time of acceptance, by the Contractor, Contracting Officer and the Customer Representative. Include within the warranty management plan , but not limited to, the following:

a. Roles and responsibilities of all personnel associated with the warranty process, including points of contact and telephone numbers within the organizations of the Contractors, subcontractors, manufacturers or suppliers involved.

b. Furnish with each warranty the name, address, and telephone number of each of the guarantor's representatives nearest to the project location.

c. Listing and status of delivery of all Certificates of Warranty for extended warranty items, to include roofs, HVAC balancing, pumps, motors, transformers, and for all commissioned systems such as fire protection and alarm systems, sprinkler systems, lightning protection systems, etc.

d. A list for each warranted equipment, item, feature of construction or system indicating:

(1) Name of item.
(2) Model and serial numbers.
(3) Location where installed.
(4) Name and phone numbers of manufacturers or suppliers.
(5) Names, addresses and telephone numbers of sources of spare parts.
(6) Warranties and terms of warranty. Include one-year overall warranty of construction, including the starting date of warranty of construction. Items which have extended warranties must be indicated with separate warranty expiration dates.
(7) Cross-reference to warranty certificates as applicable.
(8) Starting point and duration of warranty period.
(9) Summary of maintenance procedures required to continue the warranty in force.
(10) Cross-reference to specific pertinent Operation and Maintenance manuals.
(11) Organization, names and phone numbers of persons to call for warranty service.
(12) Typical response time and repair time expected for various warranted equipment.

e. The plans for attendance at the 4 and 9 month post-construction warranty inspections conducted by the Government.

f. Procedure and status of tagging of all equipment covered by extended warranties.

g. Copies of instructions to be posted near selected pieces of equipment where operation is critical for warranty and/or safety reasons.

1.6.2 Performance Bond

The Performance Bond must remain effective throughout the construction period .

a. In the event the Contractor fails to commence and diligently pursue any construction warranty work required, the Contracting Officer will have the work performed by others, and after completion of the work, will charge the remaining construction warranty funds of expenses incurred by the Government while performing the work, including, but not limited to administrative expenses.

b. In the event sufficient funds are not available to cover the construction warranty work performed by the Government at the Contractor's expense, the Contracting Officer will have the right to recoup expenses from the bonding company.

c. Following oral or written notification of required construction warranty repair work, respond in a timely manner. Written verification will follow oral instructions. Failure to respond will be cause for the Contracting Officer to proceed against the Contractor.

1.6.3 Pre-Warranty Conference

Prior to contract completion, and at a time designated by the Contracting Officer, meet with the Contracting Officer to develop a mutual understanding with respect to the requirements of this section. Communication procedures for Contractor notification of construction warranty defects, priorities with respect to the type of defect,

reasonable time required for Contractor response, and other details deemed necessary by the Contracting Officer for the execution of the construction warranty will be established/reviewed at this meeting. In connection with these requirements and at the time of the Contractor's quality control completion inspection, furnish the name, telephone number and address of a licensed and bonded company which is authorized to initiate and pursue construction warranty work action on behalf of the Contractor. This point of contact will be located within the local service area of the warranted construction, be continuously available, and be responsive to Government inquiry on warranty work action and status. This requirement does not relieve the Contractor of any of its responsibilities in connection with other portions of this provision.

1.6.4 Warranty Tags

At the time of installation, tag each warranted item with a durable, oil and water resistant tag approved by the Contracting Officer. Attach each tag with a copper wire and spray with a silicone waterproof coating. Also, submit two record copies of the warranty tags showing the layout and design. The date of acceptance and the QC signature must remain blank until the project is accepted for beneficial occupancy. Show the following information on the tag.

Type of product/material	
Model number	
Serial number	
Contract number	
Warranty period from/to	
Inspector's signature	
Construction Contractor	
Address	
Telephone number	
Warranty contact	
Address	
Telephone number	
Warranty response time priority code	

WARNING - PROJECT PERSONNEL TO PERFORM ONLY OPERATIONAL MAINTENANCE DURING THE WARRANTY PERIOD.

PART 2 PRODUCTS

2.1 CERTIFICATION OF EPA DESIGNATED ITEMS

Submit the Certification of EPA Designated Items as required by FAR 52.223-9, "Certification and Estimate of Percentage of Recovered Material Content for EPA Designated Items". Include on the certification form the following information: project name, project number, Contractor name, license number, Contractor address, and certification. The certification will read as follows and be signed and dated by the Contractor. "I hereby certify the information provided herein is accurate and that the requisition/procurement of all materials listed on this form comply with current EPA standards for recycled/recovered materials content. The following exemptions may apply to the non-procurement of recycled/recovered content materials:

1) The product does not meet appropriate performance standards;
2) The product is not available within a reasonable time frame;
3) The product is not available competitively (from two or more sources);
4) The product is only available at an unreasonable price (compared with a comparable non-recycled content product)."

Record each product used in the project that has a requirement or option of containing recycled content in accordance with SECTION 01 33 29 SUSTAINABILITY REPORTING, noting total price, total value of post-industrial recycled content, total value of post-consumer recycled content, exemptions (1, 2, 3, or 4, as indicated), and comments. Recycled content values may be determined by weight or volume percent, but must be consistent throughout.

PART 3 EXECUTION

3.1 AS-BUILT DRAWINGS

Provide and maintain As-Built Drawings in accordance with NFAS 5252.236-9310. Submit As-Built Drawings 30 days prior to Beneficial Occupancy Date(BOD).

3.1.1 Markup Guidelines

Make comments and markup the drawings complete without reference to letters, memos, or materials that are not part of the As-Built drawing. Show what was changed, how it was changed, where items(s) were relocated and change related details. These working as-built markup prints must be neat, legible and accurate as follows:

a. Use base colors of red, green, and blue. Color code for changes as follows:

(1) Special (Blue) - Items requiring special information, coordination, or special detailing or detailing notes.

(2) Deletions (Red) - Over-strike deleted graphic items (lines), lettering in notes and leaders.

(3) Additions (Green) - Added items, lettering in notes and leaders.

b. Provide a legend if colors other than the "base" colors of red, green, and blue are used.

c. Add and denote any additional equipment or material facilities, service lines, incorporated under As-Built Revisions if not already shown in legend.

d. Use frequent written explanations on markup drawings to describe changes. Do not totally rely on graphic means to convey the revision.

e. Use legible lettering and precise and clear digital values when marking prints. Clarify ambiguities concerning the nature and application of change involved.

f. Wherever a revision is made, also make changes to related section views, details, legend, profiles, plans and elevation views, schedules, notes and call out designations, and mark accordingly to avoid conflicting data on all other sheets.

g. For deletions, cross out all features, data and captions that relate to that revision.

h. For changes on small-scale drawings and in restricted areas, provide large-scale inserts, with leaders to the applicable location.

i. Indicate one of the following when attaching a print or sketch to a markup print:

1) Add an entire drawing to contract drawings

2) Change the contract drawing to show

3) Provided for reference only to further detail the initial design.

j. Incorporate all shop and fabrication drawings into the markup drawings.

3.1.2 As-Built Drawings Content

Show on the as-built drawings, but not limited to, the following information:

a. The actual location, kinds and sizes of all sub-surface utility lines. In order that the location of these lines and appurtenances may be determined in the event the surface openings or indicators become covered over or obscured, show by offset dimensions to two permanently fixed surface features the end of each run including each change in direction on the record drawings. Locate valves, splice boxes and similar appurtenances by dimensioning along the utility run from a reference point. Also record the average depth below the surface of each run.

b. The location and dimensions of any changes within the building structure.

c. Layout and schematic drawings of electrical circuits and piping.

d. Correct grade, elevations, cross section, or alignment of roads, earthwork, structures or utilities if any changes were made from contract plans.

e. Changes in details of design or additional information obtained from working drawings specified to be prepared and/or furnished by the Contractor; including but not limited to shop drawings, fabrication, erection, installation plans and placing details, pipe sizes, insulation material, dimensions of equipment foundations, etc.

f. The topography, invert elevations and grades of drainage installed or affected as part of the project construction.

g. Changes or Revisions which result from the final inspection.

h. Where contract drawings or specifications present options, show only the option selected for construction on the working as-built markup drawings.

i. If borrow material for this project is from sources on Government property, or if Government property is used as a spoil area, furnish a contour map of the final borrow pit/spoil area elevations.

j. Systems designed or enhanced by the Contractor, such as HVAC controls, fire alarm, fire sprinkler, and irrigation systems.

k. Changes in location of equipment and architectural features.

j. Modifications (include within change order price the cost to change working as-built markup drawings to reflect modifications) and compliance with FC 1-300-09N procedures.

l. Actual location of anchors, construction and control joints, etc., in concrete.

m. Unusual or uncharted obstructions that are encountered in the contract work area during construction.

n. Location, extent, thickness, and size of stone protection particularly where it will be normally submerged by water.

3.2 RECORD DRAWINGS

Prepare and provide Record Drawings in accordance with FC 1-300-09N. Provide 2 copies of Record Drawings on two separate CDs or DVDs 30 days after BOD.

3.3 OPERATION AND MAINTENANCE MANUALS

Provide project operation and maintenance manuals as specified in Section 01 78 23 OPERATION AND MAINTENANCE MANUALS DATA. Provide four electronic copies of the Operation and Maintenance Manual files. Submit to the Contracting Officer for approval within 60 calendar days of the Beneficial Occupancy Date (BOD). Update and resubmit files for final approval at BOD.

3.4 CLEANUP

Provide final cleaning in accordance with ASTM E1971 and submit two copies

of the listing of completed final clean-up items. Leave premises "broom clean." Comply with GS-37 for general purpose cleaning and bathroom cleaning. Use only nonhazardous cleaning materials, including natural cleaning materials, in the final cleanup. Clean interior and exterior glass surfaces exposed to view; remove temporary labels, stains and foreign substances; polish transparent and glossy surfaces; vacuum carpeted and soft surfaces. Clean equipment and fixtures to a sanitary condition. Replace filters of operating equipment and comply with the Indoor Air Quality (IAQ) Management Plan. Clean debris from roofs, gutters, downspouts and drainage systems. Sweep paved areas and rake clean landscaped areas. Remove waste and surplus materials, rubbish and construction facilities from the site. Recycle, salvage, and return construction and demolition waste from project in accordance with Section 01 57 19 TEMPORARY ENVIRONMENTAL CONTROLS, and 01 74 19 CONSTRUCTION AND DEMOLITION WASTE MANAGEMENT.

3.5 NAVFAC SUSTAINABLE & ENERGY DATA RECORD CARD

Within 60 days of the completion of Project, complete an electronic copy of the NAVFAC Sustainable & Energy Data Record Card, and submit to the Contracting Officer. Draft Record card for this project should be available from Designer of Record (DOR) or Contracting Officer. Instructions and a blank DD Form (fill-able) in ADOBE (PDF) may be obtained at the Whole Building Design Guide web site by navigating: Home > Participating Agencies > Department of Defense (DoD) > NAVFAC Sustainable Development Program > Contract Documents > NAVFAC Sustainable & Energy Data Record Card; or directly at http://www.wbdg.org/pdfs/navfac_sustainable_energy_data_record_card.pdf.

-- End of Section --

THIS PAGE HAS BEEN INTENTIONALLY LEFT BLANK

SECTION 01 78 23

OPERATION AND MAINTENANCE DATA
09/15

PART 1 GENERAL

1.1 REFERENCES

The publications listed below form a part of this specification to the extent referenced. The publications are referred to within the text by the basic designation only.

ASTM INTERNATIONAL (ASTM)

ASTM E1971	(2005; R 2011) Stewardship for the Cleaning of Commercial and Institutional Buildings

1.2 SUBMISSION OF OPERATION AND MAINTENANCE DATA

Submit Operation and Maintenance (O&M) Data specifically applicable to this contract and a complete and concise depiction of the provided equipment, product, or system, stressing and enhancing the importance of system interactions, troubleshooting, and long-term preventative maintenance and operation. The subcontractors must compile and prepare data and deliver to the Contractor prior to the training of Government personnel. The Contractor must compile and prepare aggregate O&M data including clarifying and updating the original sequences of operation to as-built conditions. Organize and present information in sufficient detail to clearly explain O&M requirements at the system, equipment, component, and subassembly level. Include an index preceding each submittal. Submit in accordance with this section, Section 01 78 24.00 20 FACILITY ELECTRONIC OPERATION AND MAINTENANCE SUPPORT INFORMATION (eOMSI), and Section 01 33 00 SUBMITTAL PROCEDURES.

1.2.1 Package Quality

Documents must be fully legible. Poor quality copies and material with hole punches obliterating the text or drawings will not be accepted.

1.2.2 Package Content

Data package content shall be as shown in the paragraph titled "Schedule of Operation and Maintenance Data Packages." Comply with the data package requirements specified in the individual technical sections, including the content of the packages and addressing each product, component, and system designated for data package submission, except as follows. Commissioned items without a specified data package requirement in the individual technical sections must use Data Package 3. Commissioned items with a Data Package 1 or 2 requirement must use instead Data Package 3.

1.2.3 Changes to Submittals

Manufacturer-originated changes or revisions to submitted data must be furnished by the Contractor if a component of an item is so affected subsequent to acceptance of the O&M Data. Submit changes, additions, or revisions required by the Contracting Officer for final acceptance of

submitted data within 30 calendar days of the notification of this change requirement.

1.2.4 Review and Approval

The Government's Commissioning Authority (CA) must review the commissioned systems and equipment submittals for completeness and applicability. The CA must verify that the systems and equipment provided meet the requirements of the Contract documents and design intent, particularly as they relate to functionality, energy performance, water performance, maintainability, sustainability, system cost, indoor environmental quality, and local environmental impacts. The CA must communicate deficiencies to the Contracting Officer. Upon a successful review of the corrections, the CA must recommend approval and acceptance of these O&M manuals to the Contracting Officer. This work is in addition to the normal review procedures for O&M data.

1.2.5 O&M Database

Develop a database from the O&M manuals that contains the information required to start a preventative maintenance program.

1.3 TYPES OF INFORMATION REQUIRED IN O&M DATA PACKAGES

1.3.1 Operating Instructions

Include specific instructions, procedures, and illustrations for the following phases of operation for the installed model and features of each system:

1.3.1.1 Safety Precautions

List personnel hazards and equipment or product safety precautions for all operating conditions.

1.3.1.2 Operator Prestart

Include procedures required to install, set up, and prepare each system for use.

1.3.1.3 Startup, Shutdown, and Post-Shutdown Procedures

Provide narrative description for Startup, Shutdown and Post-shutdown operating procedures including the control sequence for each procedure.

1.3.1.4 Normal Operations

Provide narrative description of Normal Operating Procedures. Include Control Diagrams with data to explain operation and control of systems and specific equipment.

1.3.1.5 Emergency Operations

Include Emergency Procedures for equipment malfunctions to permit a short period of continued operation or to shut down the equipment to prevent further damage to systems and equipment. Include Emergency Shutdown Instructions for fire, explosion, spills, or other foreseeable contingencies. Provide guidance and procedures for emergency operation of all utility systems including required valve positions, valve locations

and zones or portions of systems controlled.

1.3.1.6 Operator Service Requirements

Include instructions for services to be performed by the operator such as lubrication, adjustment, inspection, and recording gage readings.

1.3.1.7 Environmental Conditions

Include a list of Environmental Conditions (temperature, humidity, and other relevant data) that are best suited for the operation of each product, component or system. Describe conditions under which the item equipment should not be allowed to run.

1.3.2 Preventive Maintenance

Include the following information for preventive and scheduled maintenance to minimize corrective maintenance and repair for the installed model and features of each system. Include potential environmental and indoor air quality impacts of recommended maintenance procedures and materials.

1.3.2.1 Lubrication Data

Include preventative maintenance lubrication data, in addition to instructions for lubrication provided under paragraph titled "Operator Service Requirements":

a. A table showing recommended lubricants for specific temperature ranges and applications.

b. Charts with a schematic diagram of the equipment showing lubrication points, recommended types and grades of lubricants, and capacities.

c. A Lubrication Schedule showing service interval frequency.

1.3.2.2 Preventive Maintenance Plan and Schedule

Include manufacturer's schedule for routine preventive maintenance, inspections, tests and adjustments required to ensure proper and economical operation and to minimize corrective maintenance. Provide manufacturer's projection of preventive maintenance work-hours on a daily, weekly, monthly, and annual basis including craft requirements by type of craft. For periodic calibrations, provide manufacturer's specified frequency and procedures for each separate operation.

1.3.2.3 Cleaning Recommendations

Provide environmentally preferable cleaning recommendations in accordance with ASTM E1971.

1.3.3 Corrective Maintenance (Repair)

Include manufacturer's recommended procedures and instructions for correcting problems and making repairs for the installed model and features of each system. Include potential environmental and indoor air quality impacts of recommended maintenance procedures and materials.

1.3.3.1 Troubleshooting Guides and Diagnostic Techniques

Include step-by-step procedures to promptly isolate the cause of typical malfunctions. Describe clearly why the checkout is performed and what conditions are to be sought. Identify tests or inspections and test equipment required to determine whether parts and equipment may be reused or require replacement.

1.3.3.2 Wiring Diagrams and Control Diagrams

Wiring diagrams and control diagrams shall be point-to-point drawings of wiring and control circuits including factory-field interfaces. Provide a complete and accurate depiction of the actual job specific wiring and control work. On diagrams, number electrical and electronic wiring and pneumatic control tubing and the terminals for each type, identically to actual installation configuration and numbering.

1.3.3.3 Maintenance and Repair Procedures

Include instructions and a list of tools required to repair or restore the product or equipment to proper condition or operating standards.

1.3.3.4 Removal and Replacement Instructions

Include step-by-step procedures and a list of required tools and supplies for removal, replacement, disassembly, and assembly of components, assemblies, subassemblies, accessories, and attachments. Provide tolerances, dimensions, settings and adjustments required. Instructions shall include a combination of text and illustrations.

1.3.3.5 Spare Parts and Supply Lists

Include lists of spare parts and supplies required for maintenance and repair to ensure continued service or operation without unreasonable delays. Special consideration is required for facilities at remote locations. List spare parts and supplies that have a long lead-time to obtain.

1.3.4 Corrective Maintenance Work-Hours

Include manufacturer's projection of corrective maintenance work-hours including requirements by type of craft. Corrective maintenance that requires completion or participation of the equipment manufacturer shall be identified and tabulated separately.

1.3.5 Appendices

Provide information required below and information not specified in the preceding paragraphs but pertinent to the maintenance or operation of the product or equipment. Include the following:

1.3.5.1 Product Submittal Data

Provide a copy of all SD-03 Product Data submittals required in the applicable technical sections.

1.3.5.2 Manufacturer's Instructions

Provide a copy of all SD-08 Manufacturer's Instructions submittals

required in the applicable technical sections.

1.3.5.3 O&M Submittal Data

Provide a copy of all SD-10 Operation and Maintenance Data submittals required in the applicable technical sections.

1.3.5.4 Parts Identification

Provide identification and coverage for all parts of each component, assembly, subassembly, and accessory of the end items subject to replacement. Include special hardware requirements, such as requirement to use high-strength bolts and nuts. Identify parts by make, model, serial number, and source of supply to allow reordering without further identification. Provide clear and legible illustrations, drawings, and exploded views to enable easy identification of the items. When illustrations omit the part numbers and description, both the illustrations and separate listing shall show the index, reference, or key number that will cross-reference the illustrated part to the listed part. Parts shown in the listings shall be grouped by components, assemblies, and subassemblies in accordance with the manufacturer's standard practice. Parts data may cover more than one model or series of equipment, components, assemblies, subassemblies, attachments, or accessories, such as typically shown in a master parts catalog

1.3.5.5 Warranty Information

List and explain the various warranties and clearly identify the servicing and technical precautions prescribed by the manufacturers or contract documents in order to keep warranties in force. Include warranty information for primary components such as the compressor of air conditioning system.

1.3.5.6 Personnel Training Requirements

Provide information available from the manufacturers that is needed for use in training designated personnel to properly operate and maintain the equipment and systems.

1.3.5.7 Testing Equipment and Special Tool Information

Include information on test equipment required to perform specified tests and on special tools needed for the operation, maintenance, and repair of components.

1.3.5.8 Testing and Performance Data

Include completed prefunctional checklists, functional performance test forms, and monitoring reports. Include recommended schedule for retesting and blank test forms.

1.3.5.9 Contractor Information

Provide a list that includes the name, address, and telephone number of the General Contractor and each Subcontractor who installed the product or equipment, or system. For each item, also provide the name address and telephone number of the manufacturer's representative and service organization that can provide replacements most convenient to the project site. Provide the name, address, and telephone number of the product,

equipment, and system manufacturers.

1.4 TYPES OF INFORMATION REQUIRED IN CONTROLS O&M DATA PACKAGES

Include Data Package 5 and the following for control systems:

a. Narrative description on how to perform and apply all functions, features, modes, and other operations, including unoccupied operation, seasonal changeover, manual operation, and alarms. Include detailed technical manual for programming and customizing control loops and algorithms.

b. Full as-built sequence of operations.

c. Copies of all checkout tests and calibrations performed by the Contractor (not Cx tests).

d. Full print out of all schedules and set points after testing and acceptance of the system.

e. Full as-built print out of software program.

f. Electronic File:

(1) Assemble each manual into a composite electronically indexed file in PDF format. Provide HDD’s, DVD's or CD's as appropriate, so that each one contains all maintenance and record files, and also the Project Record Documents and Training Videos, of the entire program for this facility.

(2) Name each indexed document file in composite electronic index with applicable item name. Include a complete electronically linked operation and maintenance directory.

(3) Link the index to separate files within the composite of files. Book mark maintenance and record files, that have a Table of Contents, according to the Table of Contents

1.5 SCHEDULE OF OPERATION AND MAINTENANCE DATA PACKAGES

Furnish the O&M data packages specified in individual technical sections. The required information for each O&M data package is as follows:

1.5.1 Data Package 1

a. Safety precautions

b. Cleaning recommendations

c. Maintenance and repair procedures

d. Warranty information

e. Contractor information

f. Spare parts and supply list

1.5.2 Data Package 2

a. Safety precautions

b. Normal operations

c. Environmental conditions

d. Lubrication data

e. Preventive maintenance plan and schedule

f. Cleaning recommendations

g. Maintenance and repair procedures

h. Removal and replacement instructions

i. Spare parts and supply list

j. Parts identification

k. Warranty information

l. Contractor information

1.5.3 Data Package 3

a. Safety precautions

b. Operator prestart

c. Startup, shutdown, and post-shutdown procedures

d. Normal operations

e. Emergency operations

f. Environmental conditions

g. Lubrication data

h. Preventive maintenance plan and schedule

i. Cleaning recommendations

j. Troubleshooting guides and diagnostic techniques

k. Wiring diagrams and control diagrams

l. Maintenance and repair procedures

m. Removal and replacement instructions

n. Spare parts and supply list

o. Product submittal data

p. O&M submittal data

q. Parts identification

r. Warranty information

s. Testing equipment and special tool information

t. Testing and performance data

u. Contractor information

1.5.4 Data Package 4

a. Safety precautions

b. Operator prestart

c. Startup, shutdown, and post-shutdown procedures

d. Normal operations

e. Emergency operations

f. Operator service requirements

g. Environmental conditions

h. Lubrication data

i. Preventive maintenance plan and schedule

j. Cleaning recommendations

k. Troubleshooting guides and diagnostic techniques

l. Wiring diagrams and control diagrams

m. Maintenance and repair procedures

n. Removal and replacement instructions

o. Spare parts and supply list

p. Corrective maintenance man-hours

q. Product submittal data

r. O&M submittal data

s. Parts identification

t. Warranty information

u. Personnel training requirements

v. Testing equipment and special tool information

w. Testing and performance data

x. Contractor information

1.5.5 Data Package 5

a. Safety precautions

b. Operator prestart

c. Start-up, shutdown, and post-shutdown procedures

d. Normal operations

e. Environmental conditions

f. Preventive maintenance plan and schedule

g. Troubleshooting guides and diagnostic techniques

h. Wiring and control diagrams

i. Maintenance and repair procedures

j. Removal and replacement instructions

k. Spare parts and supply list

l. Product submittal data

m. Manufacturer's instructions

n. O&M submittal data

o. Parts identification

p. Testing equipment and special tool information

q. Warranty information

r. Testing and performance data

s. Contractor information

PART 2 PRODUCTS

Not Used.

PART 3 EXECUTION

Not Used.

-- End of Section --

THIS PAGE HAS BEEN INTENTIONALLY LEFT BLANK

SECTION 01 78 24.00 20

FACILITY ELECTRONIC OPERATION AND MAINTENANCE SUPPORT INFORMATION (eOMSI)
02/15

PART 1 GENERAL

1.1 REFERENCES

The publications listed below form a part of this specification to the extent referenced. The publications are referred to within the text by the basic designation only.

U.S. DEPARTMENT OF DEFENSE (DOD)

FC 1-300-09N (2014) Navy and Marine Corps Design Procedures

1.2 DEFINITIONS AND ABBREVIATIONS

1.2.1 eOMSI Manual

Manual (PDF file) provided by the Contractor that includes, but is not limited to, product information, a facility description with photos, and a list of primary facility systems.

1.2.2 eOMSI Facility Data Workbook (FDW)

A Microsoft Excel file containing required facility information populated by the Contractor.

1.2.3 Systems

The words "system", "systems", and "equipment", when used in this document refer to as-built systems and equipment.

1.2.4 Computer Assisted Design and Drafting (CADD)

Electronic Computer Assisted Design and Drafting graphic software program that is used to create facility design contract documents and Record Drawings.

1.2.5 KTR

An abbreviation for "Contractor."

1.3 EOMSI MEETINGS

1.3.1 Pre-Construction Meeting

Be prepared to discuss the following during this meeting:

a. eOMSI Manual and eOMSI Facility Data Workbook Development Meetings

b. Processes and methods of gathering eOMSI Manual and eOMSI Facility Data Workbook information during construction.

c. The eOMSI Submittals schedule. Include the eOMSI submittal schedule

on the Baseline Construction Schedule in accordance with Section 01 32 17.00 20 COST-LOADED NETWORK ANALYSIS SCHEDULE (NAS).

1.3.2 eOMSI Manual and Facility Data Workbook Coordination Meeting

Facilitate a meeting after the Pre-Construction Meeting prior to the submission of the eOMSI Progress Submittal. Meeting attendance must include the Contractor's eOMSI Manual and Facility Data Workbook Preparer, and Quality Control Manager, the Commissioning Authority (CxA), and the Government's Design Manager (DM), Contracting Officer's Representative, and NAVFAC Public Works (PW) Facilities Management Division (FMD). Include any Mechanical, Electrical, and Fire Protection Sub-Contractors.

The purpose of this meeting is to reach a mutual understanding of the scope of work concerning the contract requirements for eOMSI and coordinate the efforts necessary by both the Government and Contractor to ensure an accurate collection, preparation and timely Government review of eOMSI.

1.3.3 Facility Turnover Meeting

Include eOMSI in NAVFAC Red Zone (NRZ) facility turnover meetings as specified in Section 01 30 00, ADMINISTRATIVE REQUIREMENTS.

1.4 SUBMITTAL SCHEDULING

1.4.1 eOMSI, Progress Submittal

Submit the Progress submittal when construction is approximately 50 percent complete, to the Contracting Officer for approval. Provide eOMSI Manual Files (Bookmarked PDF) and eOMSI Facility Data Workbook (Excel). Include the elements and portions of system construction completed up to this point.

The purpose of this submittal is to verify progress is in accordance with contract requirements as discussed during the eOMSI Coordination Meeting. Field verify a portion of the eOMSI information in accordance with paragraph FIELD VERIFICATION.

1.4.2 eOMSI, Prefinal Submittal

Submit the 100 percent submittal of the eOMSI Prefinal Submittal to the Contracting Officer for approval within 60 calendar days of the Beneficial Occupancy Date (BOD). This submittal must provide a complete, working document that can be used to operate and maintain the facility. Any portion of the submittal that is incomplete or inaccurate requires the entire submittal to be returned for correction. Any discrepancies discovered during the Government's review of eOMSI Progress submittal must be corrected prior to the Prefinal submission.

The eOMSI Prefinal Submittal must include eOMSI Manual Files (Bookmarked PDF) and eOMSI Facility Data Workbook (Excel).

1.4.3 eOMSI, Final Submittal

Submit completed eOMSI Manual Files (Bookmarked PDF) and eOMSI Facility Data Workbook (Excel). The Final submittal is due at BOD. Any discrepancies discovered during the Government's review of the Prefinal eOMSI submittal, including the Field Verification, must be corrected prior

to the Final eOMSI submission.

1.5 UNITS OF MEASURE

Provide eOMSI utilizing the units of measure used in the Government generated contract documents.

1.6 SUBMITTALS

Government approval is required for submittals with a "G" designation; submittals not having a "G" designation are for Contractor Quality Control approval. Submit the following in accordance with Section 01 33 00 SUBMITTAL PROCEDURES:

SD-11 Closeout Submittals

eOMSI, Progress Submittal; G
eOMSI, Prefinal Submittal; G
eOMSI, Final Submittal; G

PART 2 PRODUCTS

2.1 eOMSI FILES FORMAT

Format eOMSI manuals and files in accordance with Section 01 78 23 OPERATION AND MAINTENANCE DATA. Include a complete electronically linked operation and maintenance directory. Provide four electronic copies of the eOMSI Manuals to the Contracting Officer for approval.

Provide eOMSI Facility Data Workbook on compact disks (CD) or data digital versatile disk (DVD) disks in (EXCEL) format. Scan eOMSI Manual Files and eOMSI Facility Data Workbook for viruses, malware, and spyware using a commercially available scanning program that is routinely updated to identify and remove current virus threats.

2.1.1 eOMSI Manual Organization

Organize the eOMSI Manuals into two parts: 1) Product and Drawing Information, and 2) Facility Information. Bookmark the PDF files for easy access to the information.

a. Bookmark Product and Drawing Information documents in accordance with Section 01 78 23 OPERATION AND MAINTENANCE DATA.

b. Bookmark Facility Information to at least one level lower than the major system.

2.1.2 eOMSI Manual CD or DVD Disk Label and Disk Holder or Case

Provide disks in accordance with Section 01 78 23 OPERATION AND MAINTENANCE DATA.

2.2 eOMSI MANUAL

2.2.1 Product and Drawing Information

Provide an organized record of the facility products, materials, equipment, and minimum information necessary to operate the facility. Provide Product and Drawing Information for the systems in the final

constructed facility.

2.2.1.1 O&M Data

As a minimum, provide the approved O&M Data, submitted in the technical specification sections, in accordance with paragraph TYPES OF INFORMATION REQUIRED IN O&M DATA PACKAGES in Section 01 78 23 OPERATION AND MAINTENANCE DATA.

2.2.1.2 Record Drawings

Provide an electronic, PDF copy of the Record Drawings, prepared in accordance with FC 1-300-09N. Bookmark drawings using the sheet title and sheet number.

Include Record Drawings as part of the Red-Zone specified in Section 01 30 00 ADMINISTRATIVE REQUIREMENTS.

2.2.1.3 Utility Record Drawings

Using Record Source Drawings, show and document details of the actual installation of the utility systems; annotate and highlight the eOMSI information. Provide Utility Record Drawings in PDF format. Provide the following drawings at a large enough scale to differentiate designated isolation units from surrounding valves and switches.

a. Utility Schematic Diagrams - Provide a one line schematic diagram for each utility system such as power, water, wastewater, and gas/fuel. Schematic diagram must show from the point where the utility line is connected to the mainline up to the five-foot connection point to the facility. Indicate location or area designation for route of transmission or distribution lines; locations of duct banks, manholes/ handholes or poles; isolation units such as valves and switches; and utility facilities such as pump stations, lift stations, and substations.

b. Enlarged Connection and Cutoff Plans - Provide enlarged floor plans that provide information between the five foot utility connection point and where utilities connect to facility distribution. Enlarge floor plans/ elevations of the rooms where the utility enters the building and indicate on these plans locations of the main interior and exterior connection and cutoff points for the utilities. Also enlarge floor plans / elevations of the rooms where equipment is located. Include enough information to enable someone unfamiliar with the facility to locate the connection and cutoff points. Indicate designations such as room number, panel number, circuit breaker, or valve number, of each utility and equipment connection and cutoff point, and what that connection and cutoff point controls.

2.2.2 Facility Information

Provide the following in Facility Information:

2.2.2.1 General Facility and System Description

Describe the function of the facility. Detail the overall dimensions of the facility, number of floors, foundation type, expected number of occupants, and facility Category Code. List and generally describe all the facility systems and any special building features (for example, HVAC

Controls, Sprinkler Systems, Cranes, Elevators, and Generators). Include photographs marked up and labeled to show key operating components and the overall facility appearance.

2.2.2.2 Floor Plans

Provide uncluttered, legible 11 by 17 inches floor plans. Include room numbers, type or function of spaces, and overall facility dimensions on the floor plans. Do not include items such as construction instructions, references, or frame numbers.

2.2.2.3 Equipment Listing

Provide a table that lists the major equipment shown on the design equipment schedules. Show the item descriptions, locations, model numbers; and the names, addresses, and telephone numbers of the manufacturers, suppliers, contractors, and subcontractors.

2.2.2.4 System Flow Diagrams

Provide a flow diagram indicating system liquid, air or gas flow during normal operations. Integrate the system components into the diagram. A compilation of non-integrated, flow diagrams for the individual system components are not acceptable.

2.2.2.5 Valve List

Provide a list of all valves associated with the system. Show valve type, identification number, function, location and normal operating position.

2.2.2.6 Riser Diagrams

Provide riser diagrams and settings of equipment.

2.3 eOMSI FACILITY DATA WORKBOOK

The Government will provide this eOMSI Facility Data Workbook electronically to the Contractor upon award. Add, delete, and update Mastersystems, Systems, and Subsystems that may have changed during construction, or any items that may have been omitted or missed during design, at no additional cost to the Government. Complete the KTR Facility Data File tab based on the selection of Mastersystems, Systems, and Subsystems installed. The following tabs are included in the eOMSI Facility Data File Workbook and serve the purpose stated:

a. Instructions Tab: Instructions for completing Model & Facility Data Matrix Tab and KTR Facility Data File Tab. If a discrepancy exists between what is required in this section and the Workbook, the instructions within the workbook take precedence.

b. Model & Facility Data Matrix Tab: The Matrix lists Required Facility Asset Fields for each SYSTEM and SUBSYSTEM. The Designer of Record selects SYSTEMS and SUBSYSTEMS that are within the project scope, which the Contractor needs to include and populate in KTR Facility Data File tab. The "Required Facility Asset Field Position Numbers," one through seventeen, are pre-populated, and are not editable.

c. Required Facility Asset Fields Tab: Defines the 17 Required Facility Asset Field Position Numbers used in Model and Facility Data Matrix

and KTR Facility Data File tabs.

d. KTR Sample Facility Data File Tab: Sample KTR eOMSI facility data file. This tab provides an example of the mandatory fields of equipment installed by the Contractor, and populated in the KTR eOMSI Facility Data File Tab, along with their descriptions.

e. KTR Facility Data File Tab: Required eOMSI facility data file deliverable provided to the Government. Provide a separate and unique new row for each facility component or piece of equipment installed.

PART 3 EXECUTION

3.1 FIELD VERIFICATION

Field verify eOMSI Facility Data Workbook information with Contractor and Government personnel. Include the following personnel in this meeting: Contractor's eOMSI Manual and Facility Data Workbook Preparer and Quality Control Manager, Commissioning Authority, and the Government's Contracting Officer's Representative and NAVFAC PW FMD. Request, and provide, an eOMSI Field Verification Meeting no sooner than 14 calendar days after submission of the Progress eOMSI submittal, and another, no sooner than 14 calendar days after submission of the Prefinal eOMSI submittal. During this meeting, the Government and Contractor will verify that the eOMSI Facility Data Workbook is complete and accurate.

Field verify that at least 5 Subsystems under each of the Mastersystems are accurate, for a total of 25 Subsystems. For each of these items, verify that the required facility asset field, as defined in the "Model & Facility Data Matrix" tab, contains the specified data and it is accurate (i.e. item description, manufacturer, model no., serial no.). 100 percent accuracy of eOMSI information is required for successful field verification. If data discrepancies are discovered amongst the 25 Subsystems verified, resubmit an updated eOMSI FDW, and request a make-up field verification meeting. At the make-up field verification meeting 25 new Subsystems and their associated required facility asset fields will be field verified; the 25 new Subsystems must be 100% accurate. Any discrepancies discovered must be corrected prior to next eOMSI Facility Data Workbook Submittal.

(1) D10 - CONVEYING
(2) D20 - PLUMBING
(3) D30 - HVAC
(4) D40 - FIRE PROTECTION
(5) D50 - ELECTRICAL

3.2 eOMSI TRAINING

Provide training on eOMSI Manuals and Facility Data Workbook in accordance with Section 01 78 23 OPERATION AND MAINTENANCE DATA.

-- End of Section --

SECTION 01 78 30.00 22

GIS DATA DELIVERABLES

05/16

PART 1 GENERAL

1.1 OBJECTIVE

The primary objective of this section is to provide detailed specifications for collection and delivery of geospatial data commonly referred to as Geographic Information System (GIS) data. Additionally, this section shall provide guidance to ensure that all GIS data delivered is compatible and will add value to the MCAS Cherry Point's Installation Geospatial Information and Services (IGI&S) GEOdatabase.

Failure to comply with the specifications outlined in this document will result in non-acceptance of data deliverables.

1.1.1 Point of Contact for MCAS Cherry Point

The Point of Contact (POC) for assistance in preparation of GIS deliverables is:

MCAS Cherry Point Facilities Systems Service Office
GIS Section
chpt.facssoomb@usmc.mil

1.2 SUBMITTALS

Government approval is required for submittals with a "G" designation; submittals not having a "G" designation are for Contractor Quality Control approval. Submit the following in accordance with Section 01 33 00 SUBMITTAL PROCEDURES:

SD-11 Closeout Submittals

GIS Data Deliverables; G

1.3 GOVERNMENT GEOSPATIAL DATA AND SCHEMA

1. The IGI&S repository model schema is based on the Spatial Data Standards for Facilities, Infrastructure and Environment (SDSFIE) GEOFidelis Data Model with recurring business driven modifications and or adaptations.

   a. Data will be created and delivered by developing an ARCGIS Personal GEODatabase using ArcGIS 10.1 or higher if a higher version is being utilized by the Government at the time the deliverable is being developed.

   b. The Contractor shall verify the ArcGIS and schema version, via the CM or PM, at the commencement of this contract. All GIS DATA DELIVERABLES will be created in accordance with the current version and these specifications.

   c. The Contractor is responsible for requesting the existing GIS

Data, Schema and Domain Properties by means of a Data Request Package (DRP). Receipt of request will include Geospatial Database table structure, schema, Domain configuration, Attribute text format, i.e., case size as well as Meta Data information.

d. The DRP should be submitted prior to the start of data collection efforts and again on an as needed basis. The Contractor shall ensure that all GIS data has been created and delivered utilizing the most up to date IGI&S GEODatabase schema.

2. The Contractor shall submit a request for a Geospatial DRP to the CM or the PM.

a. Request shall be completely filled out and include all the information as instructed on the data request form.

b. Request only GIS data and or schema for feature classes that are relevant to the contract and within the boundary of project area.

c. Utilize associated Government modified domain structure(s).

d. Attach Scope of Work, which is defined by this GIS DATA DELIVERABLES section for each project request.

e. Return the DRP to the CM or PM for sponsorship and submittal to the Installation Geospatial Information & Services (IGI&S) Office.

f. Incomplete forms may delay receipt of the requested GIS data and Schema.

The following Spatial Data Standards for Facilities, Infrastructure, and Environment (SDSFIE) website may offer definitions for Feature data sets; Feature Classes and other applicable information. However, please note that specific Schema or Domain modifications are not available via this resource:

http://www.sdsfieonline.org/

1.3.1 Global Positioning System (GPS) and Spatial Reference Properties

GPS data shall be completed in accordance with the GPS Data Collection and Documentation Standards, Version 3 (or higher version if available at the time of this project) as prepared by Geographic Information Coordinating Council (GICC) Statewide Mapping Advisory Committee (SMAC) and adopted by the North Carolina Geographic Information Coordinating Council.

1. Prior to GPS efforts, ALL underground utilities shall be located utilizing a utility locating service in order to verify and obtain accurate feature locations.

2. Only bench marks included in the North Carolina Geodetic Survey Base Station Network shall be used for GPS data collection.

3. Mission planning is essential and Contractor shall utilize the best Position Dilution of Precision (PDOP) values for data accuracy.

4. Utility data, as identified in paragraph "ATTRIBUTE DATA COLLECTION AND GPS REQUIREMENTS FOR SPECIFIC FEATURES" will be collected utilizing Survey Grade GPS data collection methods.

5. Infrastructure data, as identified in paragraph "ATTRIBUTE DATA COLLECTION AND GPS REQUIREMENTS FOR SPECIFIC FEATURES" shall be collected utilizing Sub-Foot or better GPS data collection methods.

    a. Spatial accuracy requirements for Survey and Sub-Foot grade data collection are as follows:

        i. Sub-Foot requirements

            1) All points shall be within + 12 inches

            2) 95 percent accuracy rate for all points.

        ii. Survey Grade requirements

            1) All points shall be within + 1 centimeter

            2) 98 percent accuracy rate for all points

6. Every effort shall be made to capture feature locations without using offsets. All Offsets will be noted in the Final Report for each feature.

7. Excessive offsets included in the Final Data, which shall be referenced in the Final Report, shall be reviewed for quality control.

    a. Resubmittal of data will be required if PDOP planning was not observed per this specification.

The following GEODatabase Coordinate Systems and Spatial Reference Properties should be used for Marine Corps Air Station, Cherry Point:

1. North Carolina Coordinate System of 1983

    a. NAD 1983 StatePlane (North American Datum of 1927)

    b. FIPS 3200 Feet

2. Domain precision of 1000 which will result in a database accuracy of 1/1000 m

1.3.2 Demolished and Abandoned in Place (AIP) features

The Contractor shall reference all Demolished and or AIP features in the data delivered. Should the current feature data class attributes and or domains not reference AIP or demolished features, the Contractor shall be responsible for appropriately delivering these features by creating an associated "Demolished" or AIP feature class, i.e., CLJN.CL.WastewaterUtilitySegment.

The Contractor shall:

1. Utilize a blank schema for the associated feature class.

2. Rename associated feature class and add DEMO or AIP as a prefix, i.e., DEMO.CLJN.CL.WastewaterUtilitySegment, AIP.CLJN.CL.WastewaterUtilitySegment.

3. All demolished and or AIP features should provide existing spatial and non-spatial data which may be copied from existing data.

4. The Contractor will update attributes appropriately to include the following:

   a. Contract Number

   b. Drawing Number

   c. isDemolished

   d. dateDemolished or dateAIP

   e. Status

1.3.3 Creating a New Feature Class

Should a new feature class be required that is not readily available in the current GIS schema provided by the Government; the Contractor shall develop the feature class utilizing the schema consistent with the most current version of SDSFIE and document in the Final Report.

1. The Contractor shall include the following modifications (fields) to the schema structure and shall submit all information to the CM or PM for direction and final approval.

   a. Contract Number

   b. Drawing Number

1.3.4 GIS Topology Rules

All data must be created using GIS topology rules for polygons, points and lines, such as, but not limited to the following examples:

1. Polygons, Polylines and points rules; please reference illustrating topology rules in ArcGIS at www.esri.com.

2. Polygons must not have slivers.

3. All utility or infrastructure system data, which is, but is not limited to, transportation system and electrical, water, steam distribution, and wastewater collection, etc., will be created using GIS spatial connectivity rules which specify that vertex, edge and endpoints be snapped to features within the system.

4. Features will be snapped to the appropriate item.

5. Data will be created to represent the real world, for example, water, sewer and transportations systems, etc. will be drawn and or created in the direction of flow.

6. Utility and transportation systems will be created from source to sink, etc.

7. Abandoned In Place (AIP) utility lines will be located and updated in the current feature data set and identified as AIP in the attribute table.

1.3.5 Creation of Geographic Data Documentation (METADATA)

For each digital file delivered containing geographic information the Contractor shall provide documentation consistent with the Federal Geographic Data Committee (FGDC) Content Standards for Digital Geospatial Metadata (CSDGM). Both 'GEOFidelis Mandatory' and 'FGDC Mandatory' fields shall be completed for each geographic data set.

The Geospatial Information & Services (IGI&S) Metadata Authoring Guide is included in the DRP package.

Metadata generation tools included in the ArcGIS suite of software (or equivalent technology) shall be used in the production of the required metadata in XML format. Regardless of the tools used for metadata creation, the Contractor must ensure that the metadata is delivered in XML format and can be easily imported into the IGI&S GEODatabase. A copy of the FGDC metadata standard can be obtained on the internet at http://www.fgdc.gov or by contacting:

Federal Geographic Data Committee
590 National Center
Reston, Virginia 20192
Email: fgdc@fgdc.gov

(NOTE: The metadata should be formatted from the Government perspective, not the Contractor project perspective. Therefore such items as Point of Contact (POC) should be the POC currently associated with the data and NOT the Contractor's Project Manager. The Contractor shall use language and format consistent with existing metadata.)

1.3.6 New Feature Class Requirements

When developing a new feature class, the Contractor shall develop the initial structure consistent with the most current version of SDSFIE.

a. If further modifications to the database structure are required, the Contractor shall consult with the Government Project Manager for direction and final approval.

b. All new feature data classes shall be created in compliance with SDSFIE noted on the final report.

1.3.7 GIS Submittals Guidelines

All GIS Submittals will be submitted to the CM or PM and then analyzed by Government GIS personnel prior to final approval. Failure to comply with the specifications outlined in this document will result in non-acceptance of data deliverables.

1. Prior to any database development, the Contractor shall provide the Government with a technical approach document for review and approval. The Technical Approach document will describe in detail the Contractor's technical approach to designing and developing the database.

2. All attributes shall be populated in accordance with the "ATTRIBUTE DATA COLLECTION AND GPS REQUIREMENTS FOR SPECIFIC FEATURES" and shall be obtained via contract specifications, plans and record drawings.

3. The Contractor may be required to conduct research, collect data and make copies of reports and studies as necessary to verify existing and/or record drawing data. Record drawing data and closed contracts can be located in the Technical Records Section in the Public Works Department.

4. Raw GPS data and collection data files shall be included with every phase of delivery.

5. Actual spatial and non-spatial conditions in the field always supersede drawings. It is the Contractor's responsibility to locate and field verify all features to ensure attribute data and location is correctly recorded.

6. The Contractor shall submit a preliminary review of data at 15 to 25 percent contract completion to ensure specifications compliance.

7. The Contractor shall deliver digital geographic maps, GPS collection files and related data. All working text and documents and personal geodatabase shall be included for review in the draft and final delivery of data.

   a. All maps of GIS DATA DELIVERABLES will be ANSI C size and include a project title, contract number, scale, legend, standard symbology, attributes, i.e., building numbers, road names, segment diameters, etc.

8. The Contractor may be required to provide a technical consultant to meet on site.

9. The Contractor shall not deliver blank unused schema or feature class data with no attributes. Deliver only data pertinent to the contract that adds value to the GEODatabase per this section.

10. The Contractor shall deliver GIS Data at the end of each phase for all Phased Projects and Construction projects.

11. The Contractor accepts the responsibility to perform quality assurance for all data and related materials required in the section prior to submitting product to the Government.

12. The data will be analyzed for discrepancies in subject content, correct format in accordance with this statement of work, and compatibility with the existing GIS system as well as all other specifications in this section.

1.3.8 Formats, Versions and Guidelines

All data deliverables will be in the following formats and/or versions.

1. GIS data will be provided in an ArcGIS 10.1 or higher if a higher version is being used by the Government at the time of this project. The Contractor shall verify the ArcGIS version, via the CM or PM at the commencement of this contract.

2. Microsoft Office (MS) Suite data shall be delivered in MS 2010.

3. Microsoft Windows 7 operating system, unless otherwise approved by the

Government.

4. All reports and maps will be delivered as a hard copy and in a searchable Adobe Portable Document Format (PDF).

5. All text, spreadsheet, and database files, reports and maps shall be delivered on Compact Disc read - only memory (CD-ROM) or Digital Versatile Disc read - only memory (DVD-ROM).

6. The Contractor shall verify required version(s) of software and schema, via the CM or PM.

7. Map submittals shall accompany each geospatial deliverable.

   a. Include ANSI C map for each project/area.

   b. Data should be labeled and attributed per specification.

   c. All maps should include the date, a legend, scale, contract title and number.

1.3.9 Final Report Requirements with additional Guidelines

The Contractor shall follow the following:

1. Specific procedures and list of equipment, software and versions that were utilized for the GPS data collection and creation of geospatial data.

2. Submit all GPS data files.

3. Provide the date(s) the IGI&S schema and geospatial data was received.

4. Provide steps taken to create the GEODatabase.

5. Provide details on any offsets to include justification as to why offsets were utilized and on which features and or points offsets were used.

6. Describe all modifications to the geodatabase to include the name of all new features classes, i.e., new, demolished or AIP.

7. Provide the source that was utilized for required attributes.

   a. Include an ANSI C size copy of all design drawings that were referenced in the attribute data. This information should be included in all phases of delivery to include draft and final reviews.

   b. Provide the overall utility site plan drawing(s)with each submittal.

8. Specify Deliverable "Draft #" or "Final Submittal" when data is submitted to the CM or PM for review.

9. Provide the name and contact information for the GIS Technical Point of Contact who can answer questions regarding the data deliverable.

10. GIS DATA DELIVERABLES must be provided in a format that does not

require translation or pre/post processing prior to being loaded into the IGI&S GEODatabase.

11. Provide any miscellaneous information that the Contractor deems significant.

12. Provide the current version of the GIS DATA DELIVERABLES specification utilized for this contract submittal.

1.3.10 Ownership

All digital files, final hardcopy products, GPS raw data, source data acquired for this project, and related materials, including that furnished by the Government, shall become the property of the Government and will not be issued, posted, distributed, or published by the Contractor.

Note: No endorsement of software or hardware is implied.

1.4 ATTRIBUTE DATA COLLECTION AND GPS REQUIREMENTS FOR SPECIFIC FEATURES

For Attributes and Data Collection of specific MCAS Cherry Point features please consult the Cherry Point IGI&S Manager, chpt.facssoomb@usmc.mil, for a checklist and copy of the most recent Data Dictionary.

1.4.1 Non-Compliance

Failure to follow the specification outlined in this document will result in non-acceptance of data deliverable.

Note: Geospatial data delivery does not replace record drawing requirements.

PART 2 PRODUCTS

Not Used.

PART 3 EXECUTION

Not Used.

-- End of Section --

SECTION 01 91 13.00 22

GENERAL COMMISSIONING REQUIREMENTS FOR CONSTRUCTION
03/16

PART 1 GENERAL

1.1 REFERENCES

The publications listed below form a part of this section to the extent referenced. The publications are referred to within the text by the basic designation only.

NATIONAL ENVIRONMENTAL BALANCING BUREAU (NEBB)

NEBB PROCEDURAL STANDARDS	(2005) Procedural Standards for TAB (Testing, Adjusting and Balancing) Environmental Systems

U.S. GREEN BUILDING COUNCIL (USGBC)

LEED GBDC Ref Guide	(2009; R 2010) LEED Reference Guide for Green Building Design, Construction and Major Renovations of Commercial and Institutional Buildings including Core & Shell and K-12 Projects
LEED NC	(2009) Leadership in Energy and Environmental Design(tm) New Construction Rating System

1.2 COMMISSIONING - GENERAL

Commissioning is a quality-oriented, systematic process for achieving, verifying, and documenting that the performance of facilities, systems, and assemblies meet defined objectives and criteria. The commissioning process shall include specific tasks to be conducted during each phase in order to verify that design, construction, documentation, and training provided for this facility meets the Government's project requirements.

Commissioning shall:

a. Verify that applicable equipment and systems are installed according to the contract documents, manufacturer's recommendations, industry accepted minimum standards, and equipment and systems have received adequate operational checkout by the Contractor.

b. Verify and document proper performance of equipment and systems.

c. Verify that O&M documentation prepared for this project is accurate and complete.

d. Verify that all components requiring servicing can be accessed, serviced and removed without disturbing nearby components including ducts, piping, cabling or wiring.

e. Verify that the Government's operating personnel are adequately trained.

It is the intent of the Government that the commissioning process shall comply with the requirements of LEED NC prerequisite EAp1 - Fundamental Commissioning and credit EAc3 - Enhanced Commissioning. Refer to LEED GBDC Ref Guide for reference.

The Commissioning Authority (CxA) shall be provided by the Government or its representative and shall direct and coordinate the project commissioning activities.

Commissioning Team: A team comprised of the Commissioning Authority (CxA), Government Project Manager, Designer of Record (DOR), Contractor, subcontractors, and O&M personnel. Commissioning Team members shall have the authority to act on behalf of the entity he or she represents relative to the commissioning process. The Commissioning Team is explicitly organized to implement the commissioning process through collaborative and coordinated action. All team members shall work together to fulfill their contracted responsibilities and meet the objectives of the contract documents.

The commissioning process shall not take away from nor reduce the responsibility of the system designers or Contractor to provide a finished and fully functioning product.

Contractor shall include the cost of his commissioning activities in the total contract price.

Contractor is responsible for providing commissioning support for the equipment he supplies. Include cost of all special tools and instruments required for testing, operating, and maintaining equipment according to these contract documents in the total contract price.

1.3 RELATED UFGS SECTIONS

Refer to the following Sections for system specific commissioning requirements:

a. Sections 23 08 00.00 22 COMMISSIONING OF HVAC SYSTEMS for commissioning process activities for HVAC systems and equipment.

b. Section 26 08 10.00 22 COMMISSIONING OF ELECTRICAL SYSTEMS for commissioning process requirements for the facility electrical power and lighting control systems.

1.4 SUBMITTAL REQUIREMENTS

The CxA will provide Contractor with a specific request for the type of submittal documentation the CxA will require to facilitate the commissioning work. These requests will be integrated into the normal submittal process and protocol of the construction team. At minimum, the request will include the manufacturer and model number, the manufacturer's printed installation and detailed startup procedures, full sequences of operation, O&M data, and performance data, any performance test

procedures, control drawings and details of manufacturer's tests and calibration procedures. In addition, the installation and checkout materials that are actually shipped with/inside the equipment and the actual field checkout sheet forms to be used by the factory or field technicians shall be submitted to the CxA. All documentation requested by the CxA will be included by the Contractor in the O&M manual.

The CxA will review and approve submittals related to the commissioned equipment for conformance to the contract documents as it relates to the commissioning process, to the performance of the equipment and adequacy of information for developing test procedures. This review is intended primarily to aid in the development of performance procedures and only secondarily to verify compliance with equipment specifications. The CxA will notify the Government of items missing or areas that are not in conformance with contract documents and which require resubmission.

These submittals to the CxA do not constitute compliance for O&M manual documentation. The O&M manuals are the responsibility of the contractor, though the CxA will review and approve them for adequacy with respect to the commissioning review.

1.5 DEFINITIONS

Acceptance: Acceptance is a formal action, to declare that some aspect of the project meets defined requirements, thus permitting subsequent activities to proceed.

Acceptance Phase Commissioning: Commissioning tasks executed after the construction has been completed, all Site Observations and Static Tests have been completed and all Pre-Functional Testing has been completed and accepted. The main commissioning activities performed during this phase are verification that the installed systems are functional as verified by conducting Functional Performance tests and Government Training.

Basis of Design (BOD): The Engineer's Basis of Design is comprised of two components: the Design Criteria and the Design Narrative, these documents record the concepts, calculations, decisions, and product selections used to meet the Owner's Project Requirements (OPR) and to satisfy applicable regulatory requirements, standards, and guidelines. See also: Design Narrative.

Benchmarks: Benchmarks are the comparison of a building's water and energy usage to other similar buildings and to the building itself.

Building Commissioning: Commissioning of building systems such as Building Envelope, HVAC, Electrical, Special Electrical Fire Alarm, Security & Communications, Plumbing and Fire Protection.

Calibrate: The act of comparing an instrument of unknown accuracy with a standard of known accuracy to detect, correlate, report, or eliminate by adjustment any variation in the accuracy of the tested instrument.

Checklists: Lists of data or inspections that should be verified to ensure proper system or component installation, operation and function. Verification checklists are developed and used during all phases of the commissioning process to verify that the Owner's Project Requirements (OPR) are being achieved.

Commissioning Authority (CxA): The entity, who plans, schedules and

coordinates the commissioning team to implement the Commissioning Process. Where CxA is used it means the Commissioning Authority, members of his staff or appointed members of the commissioning team. The qualifications for the CxA shall comply with the requirements of LEED NC prerequisite EAp1 - Fundamental Commissioning.

Commissioning Issue: Any condition that adversely affects the commissionability, operability, maintainability or functionality of a system, equipment or component. Any condition that is in conflict with the Contract Documents and/or performance requirements of the installed systems and components. Can also be referred to as "Deficiency".

Commissioning Observation: An issue that does not conform to the project OPR, contract documents or standard industry best practices.

Commissioning Plan: A document that outlines the scope and defines responsibilities, processes, schedules, and the documentation requirements of the Commissioning Process.

Commissioning Process: A quality focused process for enhancing the delivery of a project. The process focuses upon verifying and documenting that the facility and all of its systems, components, and assemblies are planned, designed, installed, tested, can be operated, and maintained to meet the Owner's Project Requirements.

Commissioning Report (Cx): The final document which presents the commissioning process results for the project. Cx reports include an executive summary, the commissioning plan, issue log, correspondence, and all appropriate check sheets and test forms.

Commissioning Design Review: A commissioning design review is a collaborative review of the design professionals design documents for items pertaining to the following: owner's project requirements; basis of design; operability and maintainability (O&M) including documentation; functionality; training; energy efficiency, control systems' sequence of operations including building automation system features; commissioning specifications and the ability to functionally test the systems.

Commissioning Team: A team comprised of the Commissioning Authority (CxA), Government Project Manager, DOR, Contractor, and O&M personnel. Commissioning Team members shall have the authority to act on behalf of the entity he or she represents relative to the commissioning process. The Commissioning Team is explicitly organized to implement the commissioning process through collaborative and coordinated action.

Contractor: "Contractor" includes all subcontractors, vendors, etc. that are responsible to the Contractor.

Construction Phase Commissioning: All commissioning efforts executed during the construction process after the design phase and prior to the Acceptance Phase Commissioning.

Contract Documents: The documents binding on parties involved in the construction of this project (drawings, specifications, change orders, amendments, contracts, commissioning plan, etc.

Corrective Action: The implementation of actions that correct a tested or observed commissioning issue.

Data Logging: The monitoring and recording of temperature, flow, current, status, pressure, etc. of equipment using stand-alone data recorders.

Deferred System Functional Test: Tests that cannot be completed at the end of the acceptance phase due to ambient conditions, schedule issues or other conditions preventing testing during the normal acceptance testing period.

Design Criteria: A listing of the projects design requirements, including its source. These are used during the design process to show the design element meets the OPR.

Design Intent: The overall term that includes the OPR and the BOD. It is a detailed explanation of the ideas, concepts, and criteria that are defined by the Government to be important. The design intent documents are utilized to provide a written record of these ideas, concepts and criteria.

Design Phase Commissioning: All commissioning tasks executed during the design phase of the project.

Functional Performance Test (FPT): Functional performance tests are tests that are intended to prove functionality of the component or system using direct observation and monitoring methods. Functional Performance Tests include static testing, dynamic testing, failure modes, and integrated systems testing. FPT tests are done after all Pre-Functional Checklists are complete. Also called Systems Functional Performance Test, Functional Test, or Integrated Systems Test.

Functional Test Procedure: A written protocol that defines methods, steps, personnel, and acceptance criteria for tests conducted on components, equipment, assemblies, systems, and interfaces among systems.

Industry Accepted Best Practice: A design component or construction process that has achieved industry consensus for quality performance and functionality.

Installation Verification: Observations or inspections that confirm the system or component has been installed in accordance with the contract documents and to industry accepted best practices.

Issues Log: A formal and ongoing record of issues, observations, problems or concerns - and their resolution - that have been raised by members of the commissioning team during the course of the commissioning process.

Manual Test: Testing using hand-held instruments, immediate control system readouts or direct observation to verify performance (contrasted to analyzing monitored data taken over time to make the 'observation').

Operations and Maintenance (O&M) Manual: O&M manuals describe key components of each system or piece of equipment and explain how they should be operated and maintained for optimum performance.

Owner's Project Requirements (OPR): A written document that details the project requirements and the expectations of how the building and its systems will be used and operated. These include project goals, measurable performance criteria, cost considerations, benchmarks, success criteria, and supporting information.

Precision: The ability of an instrument to produce repeatable readings of

the same quantity under the same conditions. The precision of an instrument refers to its ability to produce a tightly grouped set of values around the mean value of the measured quantity.

Pre-Design Phase Commissioning: Commissioning tasks performed prior to the commencement of design activities that includes project programming and the development of the commissioning process for the project.

Pre-Functional Checklist: A form used by the contractor to verify that appropriate components are onsite, correctly installed, set up, calibrated, functional and ready for functional testing.

Sampling: Performing observation, review, testing or other verification on only a fraction of the total number of identical or near identical pieces of equipment, drawings, events, etc. Sampling techniques include random statistical sampling and less formal professional judgment methods.

Site Observation Visit: On-site inspections and observations made by the Commissioning Authority for the purpose of verifying component, equipment, and system installation, to observe contractor testing, equipment start-up procedures, or other purposes.

Site Observation Reports: Reports of site inspections and observations made by the Commissioning Authority. Observation reports are intended to provide early indication of an installation issue which will need correction or analysis.

Start Up Tests: Tests that validate the component or system is ready for automatic operation in accordance with the manufacturers' requirements.

Static Tests: Tests or inspections that validate a specified static condition such as pressure testing. Static tests may be specification or code initiated.

Systems Manual: A system-focused composite manual organized by system which contains the information needed to optimally operate the building systems. Much of the Systems Manual is not found in traditional vendor O&M Manuals. For reference, ASHRAE includes all maintenance and design documentation in their definition of Systems Manual.

Test Procedure: A written protocol that defines methods, personnel, and expectations for tests conducted on components, equipment, assemblies, systems, and interfaces among systems.

Testing: The use of specialized and calibrated instruments to measure parameters such as: temperature, pressure, vapor flow, air flow, fluid flow, rotational speed, electrical characteristics, velocity, and other data in order to determine performance, operation, or function.

Testing, Adjusting, and Balancing (TAB): A systematic process or service applied to heating, ventilating and air-conditioning (HVAC) systems and other environmental systems to achieve and document air and hydronic flow rates. The standards and procedures for providing these services are referred to as "Testing, Adjusting, and Balancing" and are described in NEBB PROCEDURAL STANDARDS.

Thermal Scans: Thermographic pictures taken with an Infrared Thermographic Camera. Thermographic pictures show the relative temperatures of objects and surfaces and are used to identify leaks, thermal bridging, thermal

intrusion, electrical overload conditions, moisture containment, and insulation failure.

Training Plan: A written document that details, in outline form, the expectations of the operator training. Training agendas should include instruction on how to obtain service, operate, startup, shutdown and maintain all systems and components of the project.

Unresolved Commissioning Issue: Any Commissioning Issue that, at the time that the Final Report or the Amended Final Report is issued that has not been either resolved by the Contractor or accepted by the Government.

Validation: The process by which work is verified as complete and operating correctly:

a. First party validation occurs when a firm or individual verifying the task is the same firm or individual performing the task.

b. Second party validation occurs when the firm or individual verifying the task is under the control of the firm performing the task or has other possibilities of financial conflicts of interest in the resolution (Architects, Designers, General Contractors and Third Tier Subcontractors or Vendors).

c. Third party validation occurs when the firm verifying the task is not associated with or under control of the firm performing or designing the task.

Verification: The process by which specific documents, components, equipment, assemblies, systems, and interfaces among systems are confirmed to comply with the criteria described in the Contract Documents and Owner's Project Requirements.

Warranty Period: Period of time in which the contractor is responsible for equipment repairs following turnover to the Government. The warranty period is defined in the construction contract.

Warranty Phase Commissioning: Commissioning efforts executed after a project has been completed and accepted by the Government. Warranty Phase Commissioning includes follow-up on verification of system performance, measurement and verification tasks and assistance in identifying warranty issues and enforcing warranty provisions of the construction contract.

Warranty Visit: A commissioning meeting and site review where all outstanding warranty issues and deferred testing is reviewed and discussed.

1.6 SYSTEMS TO BE COMMISSIONED

Commissioning of a system or systems specified for this project is part of the construction process. Documentation and testing of these systems, as well as training of the Government's personnel, is required in cooperation with the Government and the Commissioning Authority.

1.6.1 HVAC (Division 23)

Provide HVAC commissioning as required in Section 23 08 00.00 22 COMMISSIONING OF HVAC SYSTEMS.

1.6.2 Electrical (Divisions 26 and 33)

Provide electrical commissioning as required in Section 26 08 10.00 22 COMMISSIONING OF ELECTRICAL SYSTEMS.

1.6.3 Communications (Division 33)

Provide Communications commissioning as required in Section 26 08 10.00 22 COMMISSIONING OF ELECTRICAL SYSTEMS.

1.6.4 Electronic Safety and Security (Division 28)

The following systems shall be commissioned as part of this project:

a. Access Control Systems

b. Carbon Monoxide Monitoring System

1.7 COMMISSIONING PLAN

The CxA will develop the Commissioning Plan which shall be coordinated with and incorporated into the Contractor's project schedule, approved by the Government. The Commissioning Plan outlines the scope and defines responsibilities, processes, schedules, and the documentation requirements of the commissioning process. The Commissioning Plan shall be initially developed during the design phase of the project and shall be refined, with the assistance and input of the Contractor, throughout construction. The Contractor, as an integral member of the Commissioning Team, shall support the CxA and the Commissioning Team throughout the contract. The components of the Commissioning Plan are outlined in this section and other technical sections in the contract documents.

The Commissioning Plan shall naturally evolve over the course of construction. The CxA shall add, modify and refine the commissioning procedures, as approved by the Government, to suit field conditions and actual manufacturer's equipment, incorporate test data and procedure results, and provide detailed scheduling for all commissioning tasks. Contractor should reasonably expect modifications to the Commissioning Plan throughout construction.

1.8 RESPONSIBILITIES

The general responsibilities of various parties in the commissioning process are provided in this Article. The specific responsibilities are in the technical specification sections.

The Contractor shall provide all equipment, materials, and labor to inspect, check-out, start-up and test equipment and systems, except for specified testing with portable data-loggers, which shall be supplied and installed by the CxA, as required.

1.8.1 Commissioning Authority (CxA)

Coordinates and directs the commissioning activities in a logical, sequential and efficient manner using consistent protocols and forms, centralized documentation, clear and regular communications and consultations with all necessary parties, frequently updated timelines and schedules and technical expertise.

References herein to the "CxA" shall be inferred to mean "CxA or his designated representative".

1.8.1.1 Construction Phase

a. Coordinate the commissioning work and with Commissioning Team members, help integrate commissioning activities into the master schedule.

b. Revise the Construction Phase Commissioning Plan as necessary.

c. Plan and conduct commissioning scoping meetings and other commissioning meetings.

d. Request and review additional information required to perform commissioning tasks, including O&M materials, manufacturer's supplemental instructions, and contractor startup and checkout procedures.

e. Write and distribute construction checklists and functional test procedures. Prepare and maintain completed construction checklist log. Obtain the completed construction checklists from the Contractor and verify and approve by selected site observation and spot checking of a random number of typical installations.

f. Before startup, gather and review the current control sequences and interlocks and work with Contractor and DOR until sufficient clarity has been obtained, in writing, to be able to write the detailed, functional testing procedures.

g. Review and approve normal Contractor submittals applicable to systems being commissioned for compliance with commissioning needs, concurrent with the DOR reviews.

h. Develop an enhanced startup and initial systems checkout plan with Contractor.

i. Perform site visits as necessary to observe component and system installations. Attend selected planning and job-site meetings to ensure that commissioning activities are included in job progress meetings and to obtain information on construction progress. Review construction meeting minutes for revisions/substitutions relating to the commissioning process. Assist in resolving any discrepancies.

j. Verify the execution of commissioning process activities using random sampling. Verification will include, but is not limited to, equipment submittals, construction checklists, pre-functional checklists, start-up reports, training, operating and maintenance data, functional performance tests, and test reports to verify compliance with the OPR. When a random sample does not meet the requirement, report the failure in the "Issues Log."

k. Recommend approval of burner and fuel systems tuning by spot testing, by reviewing completed reports and by selected site observation.

l. Coordinate the development of a systems manual.

1.8.1.2 Acceptance Phase

a. Witness HVAC piping flushing and test procedures, to ensure that

proper procedures were followed. Document this testing and include the documentation in O&M manuals. Notify PM/CM of any deficiencies in results or procedures.

b. Witness ductwork cleaning and testing procedures, to ensure that proper procedures were followed. Document this testing and include the documentation in O&M manuals. Notify PM/CM of any deficiencies in results or procedures.

c. Recommend approval of systems startup by reviewing startup reports and by selected site observation.

d. With assistance as needed from installing contractors, witness the functional performance verification testing (PVT) of equipment and systems, performed by the Contractor and sub-contractors, including energy management control system trending, stand-alone data logger monitoring or manual performance testing, as required. Coordinate, witness, verify and document retesting as necessary until satisfactory performance is achieved. Coordinate and supervise required 2nd season testing and corrections to deficiencies.

e. Analyze any PVT trend logs and monitoring data to verify performance.

f. Maintain a master Issues Log and a separate testing record. Provide the PM/CM with written progress reports and test results with recommended actions.

g. Review and approve the training materials prepared by the Contractor for the Government's operating and maintenance personnel.

h. Review and evaluate the Operation and Maintenance (O&M) manuals submitted by the Contractor for completeness.

i. Provide a final commissioning report.

j. When necessary to solve a specific issue, prepare a standard trend logging package of primary parameters that will allow troubleshooting of improper system operations and solution recommendation.

1.8.1.3 Warranty Phase

a. Coordinate and supervise required seasonal or deferred testing and deficiency corrections.

b. Return to the site at 10 months into the 12 month warranty period and review with facility staff the current building operation and the condition of outstanding issues related to the original and seasonal commissioning. Interview facility staff and identify problems or concerns they have operating the building as originally intended. Make suggestions for improvements and for recording these changes in the O&M manuals. Identify areas that may come under warranty or under the original construction contract. Assist facility staff in developing reports, documents and requests for services to remedy outstanding problems.

c. Attend lessons learned sessions as required.

1.8.2 Government Project Manager (PM/CM)

1.8.2.1 Construction Phase

a. Attend the commissioning scoping meetings and selected commissioning team meetings.

b. Perform normal review of contract submittals, construction observation, as-built drawing preparation, O&M manual preparation, etc., as required.

c. Provide any design narrative documentation requested by the CxA.

d. Coordinate resolution of system design and construction deficiencies identified during commissioning, according to the contract documents.

e. Facilitate the coordination of the commissioning work by the CxA and the DOR, and with the assistance of the Contractor, ensure that commissioning activities are being scheduled into the master schedule.

f. Review and approve the final commissioning plan.

g. Furnish a copy of all construction documents, addenda, change orders, and shop drawing submittals related to commissioned equipment to the CxA.

h. Review and approve the functional performance test procedures submitted by the CxA, prior to testing.

1.8.2.2 Acceptance Phase

a. Prepare and submit final as-built design intent documentation for inclusion in the O&M manuals. Review and approve the O&M manuals.

b. When necessary, observe and witness startup and performance verification testing (PVT) of selected equipment.

c. Review commissioning progress and deficiency reports.

d. Coordinate the resolution of non-compliance and design deficiencies identified in all phases of commissioning.

e. Provide the Government's OPR documentation to the CxA for information and use.

f. Provide the BoD documents, prepared by DOR and approved by Government, to the CxA for use in developing the commissioning plan and systems manual.

g. Review and approve the Contractor's Training Plan for operations and maintenance personnel.

h. Coordinate and arrange for facility operation and maintenance personnel to attend various field commissioning activities, including field and classroom training sessions.

i. Provide final approval for the completion of the commissioning work.

1.8.2.3 Warranty Phase

a. Assist the CxA as necessary in the seasonal or deferred testing and deficiency corrections required by the specifications.

b. Attend lessons learned session.

1.8.3 Designer of Record (DOR)

1.8.3.1 Construction Phase

a. Perform normal submittal review, construction observation, as-built drawing preparation, etc., as required. Onsite observation should be completed just prior to system startup.

b. Provide design narratives and automatic controls sequences of operations documentation requested by the CxA. Assist (along with the Contractor) in clarifying the operation and control of commissioned equipment in areas where the specifications, control drawings or equipment documentation is not sufficient for writing detailed testing procedures.

c. Attend commissioning scoping meetings and other selected commissioning team meetings.

d. Participate in the resolution of system deficiencies identified during commissioning, according to the contract documents.

e. Prepare and submit the final as-built design intent and operating parameters documentation for inclusion in the O&M manuals. Review and approve the O&M manuals.

f. From the Contractor's red-line drawings, edit and update one-line diagrams developed as part of the design narrative documentation and those provided by the vendor as shop drawings for the domestic water; HVAC systems; supply, return and exhaust air systems and emergency power system.

g. Review and approve the CxA's construction checklist templates for major pieces of equipment for sufficiency prior to their use.

h. Review and approve the CxA's functional performance test procedure forms for major pieces of equipment for sufficiency prior to their use.

1.8.3.2 Acceptance Phase

a. Provide a presentation at one of the training sessions for the Government's personnel.

b. Witness testing of selected pieces of equipment and systems.

1.8.3.3 Warranty Phase

a. During the warranty period, participate in the resolution of non-compliance, non-conformance and design deficiencies identified during commissioning.

b. Attend lessons learned sessions, as required.

1.8.4 Contractor

Contractor shall assign representatives with expertise and authority to act on their behalf and shall schedule them to participate in and perform commissioning process activities including, but not limited to, the following:

The CxA will provide sufficient notice to the Contractor in order to schedule commissioning activities. All parties will address scheduling problems and make necessary notifications in a timely manner in order to expedite the commissioning process.

1.8.4.1 Construction Phase

a. Facilitate the coordination of the commissioning and incorporate commissioning activities (the Commissioning Plan) into the Overall Project Schedule.

b. Submit detailed startup procedures for equipment and systems for approval.

c. Ensure that all commissioning responsibilities are executed according to the contract documents and the commissioning plan.

d. Attend and participate in commissioning team meetings.

e. No later than 60 days prior to startup of the first piece of major equipment, meet with the commissioning team to finalize the detailed commissioning procedures and schedule.

f. Review and accept the construction checklists, pre-functional checklists, and functional performance test procedures provided by the CxA.

g. Complete paper copies of construction checklists and pre-functional checklists as work is completed. Provide these completed checklists to the CxA, with copies to the Government and the DOR, on a weekly basis or as otherwise required.

h. Provide all requested submittal data, including detailed startup procedures and specific responsibilities of the Government to keep warranties in force.

i. Analyze specified products and verify that the Government and DOR have specified the newest, most current equipment reasonable for this project's scope and budget.

j. Provide requested information to the CxA regarding equipment sequence of operations and testing procedures.

k. Review construction checklists and test procedures for equipment installed by factory representatives.

1.8.4.2 Acceptance Phase

a. Provide the training of Government personnel.

b. Accomplish the commissioning functional performance test procedures. Provide for retesting as required until the equipment and system have

been adjusted for provide satisfactory test results.

c. Evaluate performance deficiencies identified in test reports and, in collaboration with entity responsible for system and equipment installation, recommend corrective action.

d. Cooperate with the CxA for resolution of issues recorded in the "Commissioning Issues Log".

e. Prepare O&M manuals, according to the contract documents, including clarifying and updating the original sequences of operation to as-built/as-tested conditions.

1.8.4.3 Warranty Phase

a. Provide assistance for seasonal or deferred performance testing, observed and documented by the CxA, according to the specifications.

b. Correct deficiencies and make necessary adjustments to O&M manuals and as-built drawings for applicable issues identified in any seasonal testing.

c. Perform all guarantee work for materials furnished under the contract for the time specified in the contract, including all warranties and curing all latent defects within the time period provided in the contract.

PART 2 PRODUCTS

2.1 TEST EQUIPMENT

All standard testing equipment required to perform startup and initial checkout and required performance testing shall be provided by the Contractor for the equipment being tested. This includes, but is not limited to, two-way radios, meters, and data recorders. Data recorders may be provided by the CxA at the option of the Government.

Special equipment, tools, and instruments required for testing equipment according to these contract documents shall be included in the contractor's base bid price and shall be turned over to the Government at Project close-out.

All testing equipment shall be of sufficient quality and accuracy to test and/or measure system performance within the tolerances specified in the specifications. If not otherwise noted, the following minimum requirements apply: Temperature sensors and digital thermometers shall have a certified calibration to NIST traceable standards within the past year to an accuracy of 0.5 degree F and a resolution of + or - 0.1 degree F. Pressure sensors shall have an accuracy of + or - 2.0 percent of the value range being measured (not full range of meter) and have been calibrated within the last year. All equipment shall be calibrated according to the manufacturer's recommended intervals and when dropped or damaged. Calibration tags shall be affixed or certificates readily available.

PART 3 EXECUTION

3.1 START-UP, PRE-FUNCTIONAL CHECKLISTS AND INITIAL CHECKOUT

The following procedures apply to all equipment/systems to be commissioned.

General: Pre-functional checklists are intended to verify that the equipment and systems are fully connected and operational and to ensure that functional performance testing (in-depth system checkout) may proceed without unnecessary delays. The pre-functional checklists for a given system must be successfully completed and approved prior to startup and formal performance testing of equipment or subsystems of the given system.

Startup and Checkout Plan: The CxA will assist the project commissioning team members responsible for startup of any equipment. The primary role of the CxA in this process is to ensure that there is written documentation that each of the manufacturer-recommended procedures has been completed. The CxA shall provide pre-functional checklists and startup shall be identified in the commissioning scoping meeting and on the checklist forms.

a. The pre-functional checklists shall be provided at the initial commissioning meetings. These checklists indicate required procedures to be executed as part of startup and initial checkout of the systems and the party responsible for their execution.

b. Contractor shall determine the trade or trades responsible for executing and documenting each of the line item tasks and shall transmit the checklists to the responsible party.

c. Contractor shall develop the full startup plan by combining the manufacturer's detailed startup and checkout procedures and the pre-functional checklists.

d. Contractor shall submit the full startup plan to the CxA and the Government for review and approval.

e. The CxA will review and approve the procedures and the documentation format for reporting, and will return the procedures and the documentation format to the Contractor.

f. Contractor will implement the full startup plan.

3.1.1 Sensor and Actuator Calibration

All field-installed temperature, relative humidity, CO, CO2, refrigerant, O2, pressure sensors and gages, and all actuators (dampers and valves) on all equipment shall be calibrated. Verify that the installed locations of these devices are appropriate and away from any external causes, which might contribute to erratic operation. Submit to the CxA the calibration methods and results. All test instruments shall have had a certified calibration within the last six months to NIST traceable standards, and comply with all local, state and federal requirements and certifications, as required. Sensors installed in the equipment/unit at the factory with calibration certification provided need not be field calibrated. Provide bench testing as required at the direction of the CxA.

a. Sensor Calibration Methods:

1. All Sensors: Verify that all sensor locations are appropriate and away from causes of erratic operation. Verify that sensors with shielded cable are grounded only at one end. For sensor pairs that are used to determine a temperature or pressure difference, make sure they are reading within 0.2°F of each other for temperature and within a tolerance equal to 2 percent of the reading, of each other, for pressure. Tolerances for critical applications may be tighter.

2. Sensors without Transmitters: Make a reading with a calibrated test instrument within 6 inches of the site sensor. Verify that the sensor reading (via the permanent thermostat, gage or building automation system (BAS)) is within the tolerances in the table below of the instrument-measured value. If not, install offset in BAS, calibrate or replace sensor.

3. Sensors with Transmitters: Disconnect sensor. Connect a signal generator in place of sensor. Connect ammeter in series between transmitter and BAS control panel. Using manufacturer's resistance-temperature data, simulate minimum desired temperature. Adjust transmitter potentiometer zero until 4 mA is read by the ammeter. Repeat for the maximum temperature matching 20 mA to the potentiometer span or maximum and verify at the BAS. Record all values and recalibrate controller as necessary to conform with specified control ramps, reset schedules, proportional relationship, reset relationship and P/I reaction. Reconnect sensor. Make a reading with a calibrated test instrument within 6 inches of the site sensor. Verify that the sensor reading (via the permanent thermostat, gage or building automation system (BAS)) is within the tolerances in the table below of the instrument-measured value. If not, replace sensor and repeat. For pressure sensors, perform a similar process with a suitable signal generator.

4. Critical Applications-- For critical applications (process, manufacturing, etc.) more rigorous calibration techniques may be required for selected sensors. Describe any such methods used on an attached sheet.

b. Tolerances, Standard Applications:

1.	Cooling coil, chilled and condenser water temps	+/- 0.4 F
2.	AHU wet bulb or dew point	+/- 2.0 F
3.	Hot water coil and boiler water temp	+/- 1.5 F
4.	Outside air, space air, duct air temps	+/- 0.4 F
5.	Watt-hour, voltage & amperage	+/- 1% of design
6.	Pressures, air, water & gas	+/- 3% of design
7.	Flow rates, air	+/- 10% of design
8.	Flow rates, water	+/- 4% of design
9.	Relative humidity	+/- 4% of design

10. Combustion flue temps	+/- 5.0 F
11. Oxygen or CO2 monitor	+/- 0.1% pts
12. CO monitor	+/- 0.01% pts
13. Natural gas and oil flow rate	+/- 1% of design
14. Steam flow rate	+/- 3% of design
15. Barometric pressure	+/- 0.1 inch Hg

c. Valve and Damper Stroke Setup and Check EMS Readout: For all valve and damper actuator positions checked, verify the actual position against the BAS readout.

1. Set pumps or fans to normal operating mode. Command valve or damper closed, visually verify that valve or damper is closed and adjust output zero signal as required. Command valve or damper open, verify position is full open and adjust output signal as required. Command valve or damper to a few intermediate positions. If actual valve or damper position doesn't reasonably correspond, replace actuator.

2. Closure for heating coil valves (NO): Set heating setpoint 20°F above room temperature. Observe valve open. Remove control power from the valve and verify that the valve stem and actuator position do not change. Restore to normal. Set heating setpoint to 20°F below room temperature. Observe the valve close.

3. Closure for cooling coil valves (NC): Set cooling setpoint 20°F above room temperature. Observe the valve close. Remove control air or power from the valve and verify that the valve stem and actuator position do not change. Restore to normal. Set cooling setpoint to 20°F below room temperature. Observe valve open. For pneumatics, by override in the EMS, increase pressure to valve by 3 psi (do not exceed actuator pressure rating) and verify valve stem and actuator position does not change. Restore to normal.

3.1.2 Execution of Pre-Functional Checklists and Startup

a. Four weeks prior to the scheduled startup, Contractor shall coordinate startup and checkout with the Commissioning Team. The execution of the pre-functional checklists, startup, and checkout shall be directed and performed by the Contractor. Signatures are required for verification of completion of the work. Submit for approval by the Government and CxA.

b. Government and DOR, as necessary, shall at minimum observe the procedures for each piece of primary equipment. CxA will observe the functional performance testing of sufficient numbers of equipment or systems based on the project's sampling strategy for commissioning.

c. For lower-level components of equipment, (e.g., sensors, controllers) the CxA shall observe a sampling of the startup procedures.

d. Only individuals of the Contractor (technicians, engineers, tradesmen, vendors, etc.) who have direct knowledge and witnessed that a line item task on the construction checklist was actually performed shall

check off that item. It is not acceptable for witnessing supervisors to fill out these forms.

3.1.3 Deficiencies, Non-Conformance, and Approval in Checklists and Startup

a. Contractor shall clearly list on an attached sheet any outstanding items of the initial startup and construction checklist procedures that were not completed successfully. The form and any outstanding deficiencies shall be provided to the CxA within two days of test completion.

b. The CxA will review the report and issue either a non-compliance report or an approval form to the Contractor. The Contractor shall correct all areas that are deficient or incomplete in the checklists and tests in a timely manner, shall notify members of the Commissioning Team as soon as outstanding items have been corrected, and resubmit an updated startup report with a Statement of Correction on the original non-compliance report. When satisfactorily completed, the CxA will recommend approval of the execution of the checklists and startup of each system.

c. Items left incomplete, which later cause deficiencies or delays during performance may result in back charges to the Contractor.

3.2 PHASED COMMISSIONING

The project requires startup, tuning and performance testing to be executed in phases. Phasing shall be coordinated with the Commissioning Team and be reflected in the overall project schedule and commissioning schedule by the contractor. Final performance testing of all systems will be as required by the phasing plan. The performance testing of the "systems as a whole" will be performed before final turnover of the entire project.

3.3 FUNCTIONAL PERFORMANCE TESTING

Requirements: The functional performance testing shall demonstrate that each system is operating according to the documented design intent and contract documents. Functional performance testing facilitates bringing the systems from a state of individual substantial completion to full dynamic operation. Additionally, during the testing process, areas of deficient performance shall be identified and corrected, improving the operation and functioning of the systems.

Test Equipment: Refer to Part 2 of this Section.

Problem Solving: The burden of responsibility to solve, correct, and retest malfunctions/failures is with the Contractor, with approval of the CxA and the Government as required.

3.3.1 Coordination and Scheduling

Contractor shall provide sufficient notice regarding the completion schedule for the installation of equipment "ready for inspection" dates, to allow for the completion of the pre-functional checklists and startup of all equipment and systems, and to allow the functional performance testing to be scheduled. The Commissioning Team shall oversee, witness, and document the performance of all equipment and systems. The CxA, in association with the Contractor and facility staff as needed shall execute

the tests. Functional performance testing shall be conducted after the pre-functional checklists and startup has been satisfactorily completed. The control system shall be sufficiently tested and approved by the CxA before it is used to verify performance of other components or systems. The air balancing and water balancing shall be completed before performance testing of air or water-related equipment or systems. Testing proceeds from components to sub-systems to systems. When the proper performance of all interacting individual systems has been achieved, the interface or coordinated responses between systems shall be checked.

3.3.2 Development of Functional Test Procedures

Before the functional test procedures are finalized, the Contractor shall provide to the CxA all requested documentation and a current list of changes affecting equipment or systems, including an updated points list, program code, control sequences, and testing parameters. Using the testing parameters and requirements in the technical specifications, the CxA and the DOR shall update/develop specific test procedures and forms to verify and document proper operation of each piece of equipment and system. Contractor shall provide assistance to the CxA in developing the final functional test procedures. Prior to finalization, the CxA and the Government shall review and concur with the functional test procedures.

Test Methods:

a. Performance testing and verification may be achieved by manual testing or by monitoring the performance and analyzing the results using the control system's trend log capabilities or by stand-alone data loggers. The CxA may substitute specified methods or require an additional method to be executed other than what was specified, with the approval of the DOR and the Government. The CxA will determine which method is most appropriate for tests that do not have a specified method.

b. Simulated Conditions: Shall be allowed, though timing the testing to experience actual conditions is encouraged wherever practical.

c. Overridden Values: Overriding sensor values to simulate a condition, such as overriding the outside air temperature reading in a control system to be something other than it really is, is acceptable.

d. Simulated Signals: Using a signal generator which creates a simulated signal to test and calibrate transducers and DDC constants is generally recommended over using the sensor to act as the signal generator via simulated conditions or overridden values.

e. Altering Setpoints: Rather than overriding sensor values, and when simulating conditions is difficult, altering setpoints to test a sequence is acceptable.

f. Indirect Indicators: Relying on indirect indicators for responses or performance shall be allowed only after visually and directly verifying and documenting, over the range of the test parameters, that the indirect readings through the control system represent actual conditions and responses.

g. Setup: Each performance test shall be performed under conditions that simulate actual conditions as closely as is practically possible. The Contractor shall assist the CxA in executing the test by providing all

necessary materials, system modifications, etc., to produce the necessary flows, pressures and temperatures necessary to execute the test according to the specified conditions. At completion of the test, the Contractor shall return all affected equipment and systems to their approved operating settings.

3.4 DOCUMENTATION, NON-CONFORMANCE, AND APPROVAL OF TESTS

3.4.1 Documentation

The CxA shall witness and verify/pre-approve the documentation of the results of all performance tests. The CxA shall complete all documentation for performance testing.

3.4.2 Non-Conformance

Corrections of minor deficiencies identified may be made during the tests at the discretion of the CxA. In such cases the deficiency and resolution will be documented on the procedure form or on an attached sheet.

As tests progress and a deficiency is identified, the CxA shall discuss the issue with the Contractor, DOR and the Government.

a. When there is no dispute on the deficiency and the Contractor accepts responsibility to correct it:

    1. The CxA will document the deficiency and the Contractor's response and intentions. After the day's work, the CxA will submit the non-compliance reports to the Government and the Contractor. The Contractor shall correct the deficiency, sign the statement of correction certifying that the equipment is ready to be retested, and submit it to the CxA.

    2. Contractor shall reschedule and repeat the test.

b. If there is a dispute about a deficiency:

    1. The dispute shall be documented on the non-compliance form with the Contractor's response.

    2. Resolutions are made at the lowest management level possible. Other parties are brought into the discussions as needed. Final interpretive authority is with the Government. Final acceptance authority is with the Government's Contracting Officer (CO).

    3. The CxA shall document the resolution process.

    4. Once the interpretation and resolution have been decided, the Contractor shall correct the deficiency, sign the statement of correction on the non-compliance form and submit it to the CxA. The Contractor shall reschedule and repeat the test until satisfactory performance is achieved.

All costs associated with retesting a performance test is the Contractor's responsibility.

The Contractor shall submit in writing to the CxA and the Government, at least as often as commissioning meetings are being scheduled, the status of each outstanding discrepancy identified during commissioning.

Discussion shall cover explanations of any disagreement and proposals for their resolutions.

a. The CxA shall retain the original non-conformance forms until the end of the project.

b. Retesting shall not be considered a justified reason for a claim of delay or for a time extension by the Contractor.

3.4.3 Failure Due to Manufacturer Defect

If 10% (or three, whichever is greater) of identical pieces of equipment fail to perform to the contract documents (mechanically or substantively) due to a manufacturing defect, not allowing it to meet its submitted performance specification, all identical units may be considered unacceptable by the Government. In such case, the Contractor shall provide the Government with the following:

a. Within one week of notification from the Government, the Contractor and the manufacturer's representative shall examine all other identical units making a record of the findings.

b. Within two weeks of the original notification, the Contractor or manufacturer shall provide a signed and dated, written explanation of the problem, cause of failures, etc., and all proposed solutions to the Government and the CxA. The proposed solutions shall not significantly exceed the specification requirements of the original installation.

c. The Government shall determine whether repair or replacement of all identical units is acceptable.

d. Up to two examples of the proposed solution shall be installed by the Contractor and the Government shall test the installations for up to one week, upon which the Government shall decide whether to accept the solution.

e. Upon acceptance, the Contractor and/or the manufacturer shall replace or repair all identical items, at no expense to the Government. The replacement/repair work shall proceed with reasonable speed beginning within one week from when parts can be obtained.

3.4.4 Approval

The CxA shall note each satisfactorily demonstrated function on the test form. Final approval of the functional performance test by the Government shall be made after review by the CxA and the Government.

3.5 DEFERRED TESTING

3.5.1 Unforeseen Deferred Tests

If any check or test cannot be completed due to the project completion level, required occupancy condition or other deficiency, execution of pre-functional checklists and functional performance testing may be delayed upon approval of the CxA and the Government. These tests will be conducted in the same manner as the seasonal tests as soon as possible. Services of necessary parties will be negotiated.

3.5.2 Seasonal Testing

During the warranty period, seasonal testing (tests delayed until weather conditions are closer to the system's design) shall be completed as part of this contract. The CxA shall coordinate this activity through the Government. Tests will be executed and documented by the CxA, and deficiencies shall be corrected by the Contractor with the CxA witnessing the testing. Any final adjustments to the O&M manuals and as-built documents due to the testing shall be made by the Contractor.

3.6 TRAINING OF GOVERNMENT PERSONNEL

Contractor shall provide training coordination and shall ensure that training is completed. All training shall be coordinated through the CxA.

a. The Contractor shall provide the CxA with a training plan sixty days before the planned training date covering the following elements:

    1. Equipment

    2. Intended audience

    3. Location of training

    4. Objectives

    5. Subjects covered (description, duration of discussion, special methods, etc.)

    6. Duration of training on each subject

    7. Instructor for each subject

    8. Methods (classroom lecture, manufacturer's quality video, site walk-through, actual operational demonstrations, written handouts, etc.).

b. Provide designated Government personnel with comprehensive orientation and training in the understanding of the systems and the operation and maintenance of each piece of equipment that makes up the system.

c. Training shall normally start with classroom sessions followed by hands-on demonstration/training on each piece of equipment.

d. During any demonstration, should the system fail to perform in accordance with the requirements of the O&M manual or sequence of operations, the system shall be repaired or adjusted as necessary and the demonstration repeated at another scheduled time, if necessary.

e. The appropriate trade or manufacturer's representative shall provide the instructions on each major piece of equipment. Practical building operating expertise as well as in-depth knowledge of all modes of operation of the specific piece of equipment is required. More than one party may be required to execute the training.

f. The controls contractor shall attend sessions other than the controls training, as specified, to discuss the interaction of the controls system as it relates to the equipment being discussed.

g. The training sessions shall follow the outline in the table of contents of the operation and maintenance manual and illustrate whenever possible the use of the O&M manuals for reference.

h. Training shall include:

1. Use of the printed installation, operation and maintenance instruction material included in the O&M manuals.

2. A review of the written O&M instructions emphasizing safe and proper operating requirements, preventative maintenance, special tools needed and spare parts inventory suggestions. The training shall include startup, operation in all modes possible, shutdown, seasonal changeover and any emergency procedures.

3. Discussion of relevant health and safety issues and concerns.

4. Discussion of warranties and guarantees.

5. Common troubleshooting problems and solutions.

6. Explanatory information included in the O&M manuals.

7. Discussion of any peculiarities of equipment installation or operation.

8. Classroom sessions shall include the use of overhead projections, slides, video/audio-taped material as might be appropriate.

9. Hands-on training shall include startup, operation in all modes possible, including manual, shut-down, alarms, power failure and any emergency procedures, and preventative maintenance for all pieces of equipment.

i. Contractor shall fully explain and demonstrate the operation, function and overrides of any local packaged controls not controlled by the central control system.

Contractor shall support all training efforts.

At the discretion of the CxA, training may occur before performance testing is complete if required by the facility operators, to assist the CxA in the performance testing.

Videotaping of the training sessions will be provided by the Contractor and added to the O&M manuals. In addition, factory training videos identifying key troubleshooting, repair, service and/or replacement techniques shall be provided and reviewed with the Government.

3.7 SYSTEMS (COMMISSIONING) MANUALS

Develop a systems manual that provides future operating staff the information needed to understand and optimally operate the commissioned systems in this facility. Similar to an 'owner's manual', the systems manual shall be compiled for the purpose of informing the building staff, including 'future' staff and current or future service contractors, as well as occupants and users as to the basis for operating and maintaining the building's mechanical-electrical-plumbing systems. The systems manual is intended to be useful in the day-to-day operations of a facility, and

also shall form the basis of transferring important building information from one party to the next.

In addition to the Design Intent/Owner's Project Requirements (OPR), the Basis of Design (BOD), the project drawings and specifications, the commissioning process requires detailed Operations & Maintenance (O&M) documentation as identified in Section 01 78 23 OPERATION AND MAINTENANCE DATA, Section 01 78 24.00 20 FACILITY ELECTRONIC OPERATION AND MAINTENANCE SUPPORT INFORMATION (eOMSI), and in the technical specifications. The CxA shall review the O&M documentation provided by the Contractor for the equipment and systems for this project. From this documentation the CxA shall develop and compile a Systems (Commissioning) Manual. The Systems Manual should focus on operating, rather than maintaining the equipment, and on the interactions between equipment. The Systems Manual should include the following information for each commissioned system:

a. Executive Summary: Provide an introduction to the Systems Manual, including a history and a general description of the facility, as well as current facility operational requirements.

    1. Facility Description: Location, directions & history.

    2. Site Plan, Buildings & Floors included in the scope.

    3. Current Facility Requirements & Objectives.

    4. Functional Uses/Operational Capabilities.

    5. Space requirements.

    6. Special Requirements.

b. Provide Site Contact Information:

    1. Facilities personnel.

    2. Occupants/Users.

    3. Contractors / Outside Resources.

    4. Architects, Engineers & Consultants.

    5. Previous Retrofit Projects information.

c. Design Intent:

    1. Owner's Project Requirements (OPR).

    2. Architect/Engineer's Basis of Design (BOD).

d. Basic O&M Instructions, Requirements & Procedures:

    1. Expectations.

    2. General Operating Instructions/Procedures.

    3. System single line diagrams.

    4. As-built sequences of operations, control drawings and original

set points.

5. Operating instructions for integrated building systems.

6. Recommended schedule of maintenance requirements and frequency: Provide a schedule for preventive maintenance (PM) in both printed and electronic format. Provide frequency for each PM task including:

   a) Cleaning: Provide instructions and schedules for all routine cleaning and inspection of equipment.

   b) Inspection: If periodic inspection of equipment is required for operation, indicate the items to be inspected and provide the inspection criteria for motors, controls, filters and other items.

   c) Repairs: Provide instructions for minor repairs or adjustments required for PM routines.

   d) Corrective Maintenance: Provide corrective maintenance instructions based on a logical effect-to-cause trouble-shooting philosophy.

   e) Troubleshooting: Provide a troubleshooting guide for each major item of equipment. Guide should include columns for 'malfunction', 'probable cause', and 'recommended action'.

   f) Repair & Replacement: Indicate repair and replacement procedures most likely to be required in the maintenance of equipment.

7. Project O&M manuals.

8. Recommended schedule for retesting of commissioned systems with blank test forms from the original Commissioning Plan.

9. Recommend schedule for re-calibrating sensors and actuators

10. Operator Training: CxA shall review project training requirements for Government's operations personnel and the Contractor's training plan; and shall verify that the training meets the Owner's requirements, as stated in the contract documents.

11. Safety Precautions: Provide a listing of safety precautions and instructions to be followed before, during and after making repairs, adjustments or routine maintenance.

12. Manufacturer's Data: Manufacturer's brochures and other descriptive literature covering devices and equipment used in the system. Provide illustrations with exploded views and renewal parts lists.

    a) Indicate any special tools required to service or maintain the equipment.

    b) Performance data, ratings and curves.

    c) Warrantees and Guarantees: Review the conditions to be maintained to keep warranty in effect.

d) Any service contracts issued or required.

13. Supplemental Data: Provide written narrative or text and any special drawings required to provide necessary information, where manufacturer's standard printed data is not available and information is necessary for a proper understanding, operation and maintenance of the equipment or systems.

e. Major Systems Commissioned: Provide an equipment list, description, and summary of the following major systems. Discuss maintenance requirements, control sequences of operations, trend log points, as-built drawings, etc. Provide model number, serial number and nameplate data for each piece of equipment, and sub-components. Provide installation & start-up instructions for each piece of equipment. Provide all normal and emergency starting and shutdown procedures and data.

1. Burner System.

2. Fuel System.

3. Burner Control System.

4. Energy/Utility Costs: Savings goals, Level of Control Desired.

5. Documentation & Training Needs.

6. Performance Acceptance Criteria.

7. DDC Controls for Basic Troubleshooting; Trending & Logging.

8. Recommended 'Best Practice' Maintenance Requirements for Critical Equipment & Systems.

f. Executed Commissioning Test Procedures:

1. Provide a copy of the final, executed commissioning testing & acceptance procedures used for this project.

2. Provide a copy of the final, executed pre-functional (construction) checklists used for this project.

g. Re-Commissioning Test Procedures:

1. Step-by-step procedure for system startup, including a pre-start checklist.

2. Sequence of operations with detailed instruction in proper sequence for each mode of operations, i.e. 'occupied', 'unoccupied', or 'custodial'.

3. Emergency Operation: Provide instructions for manual operation of equipment while some functions are disabled. Provide instructions for operating under these conditions.

4. Shutdown Procedure: Include instructions for stopping and securing the equipment after operation.

h. Operations & Maintenance Submittals: Provide a record copy of all appropriate shop drawing submittals for major items of mechanical, electrical or plumbing equipment, including the equipment manufacturer's O&M manuals.

1. The CxA shall be responsible for compiling, organizing and indexing the following commissioning record data by equipment into labeled, indexed and tabbed binders and deliver to the Contractor to be included in the O&M manuals.

2. Commissioning Plan.

3. System reports including design narratives and criteria including sequences of operations, start-up plan and report, approvals, corrections, construction checklists, completed performance tests, and recommended re-commissioning schedule.

4. Final Commissioning Report: Executive summary, list of participants with roles and responsibilities, overview of commissioning and testing scope, description of testing and verification methods. For each piece of equipment, the report should contain the disposition of the CxA regarding the adequacy of the equipment, as well as the documentation and training meeting the contract requirements.

5. Non-Compliance Items: All outstanding and non-compliance items shall be specifically listed. Recommendations for improvement to equipment or operations, future actions, commissioning process changes, etc. shall also be listed. Each non-compliance issue shall be referenced to the specific performance test, inspection, trend log, etc. where the deficiency is documented. The performance and efficiency section for each piece of equipment shall include a brief description of the verification method used (manual testing, BAS trend logs, data loggers, etc.) and include observations and conclusions from the testing.

-- End of Section --

THIS PAGE HAS BEEN INTENTIONALLY LEFT BLANK

SECTION 02 41 00

DEMOLITION
05/10

PART 1 GENERAL

1.1 REFERENCES

The publications listed below form a part of this specification to the extent referenced. The publications are referred to within the text by the basic designation only.

AMERICAN ASSOCIATION OF STATE HIGHWAY AND TRANSPORTATION OFFICIALS (AASHTO)

AASHTO M 145	(1991; R 2012) Standard Specification for Classification of Soils and Soil-Aggregate Mixtures for Highway Construction Purposes
AASHTO T 180	(2015) Standard Method of Test for Moisture-Density Relations of Soils Using a 4.54-kg (10-lb) Rammer and a 457-mm (18-in.) Drop

AMERICAN SOCIETY OF SAFETY ENGINEERS (ASSE/SAFE)

ASSE/SAFE A10.6	(2006) Safety Requirements for Demolition Operations

U.S. ARMY CORPS OF ENGINEERS (USACE)

EM 385-1-1	(2014) Safety and Health Requirements Manual

U.S. DEFENSE LOGISTICS AGENCY (DLA)

DLA 4145.25	(Jun 2000; Reaffirmed Oct 2010) Storage and Handling of Liquefied and Gaseous Compressed Gases and Their Full and Empty Cylinders http://www.aviation.dla.mil/UserWeb/aviationengineerir

U.S. DEPARTMENT OF DEFENSE (DOD)

DOD 4000.25-1-M	(2006) MILSTRIP - Military Standard Requisitioning and Issue Procedures
MIL-STD-129	(2014; Rev R) Military Marking for Shipment and Storage

U.S. NATIONAL ARCHIVES AND RECORDS ADMINISTRATION (NARA)

40 CFR 61	National Emission Standards for Hazardous Air Pollutants
49 CFR 173.301	Shipment of Compressed Gases in Cylinders

and Spherical Pressure Vessels

1.2 PROJECT DESCRIPTION

1.2.1 Demolition/Deconstruction Plan

Prepare a Demolition Plan and submit proposed demolition, and removal procedures for approval before work is started. Include in the plan procedures for careful removal and disposition of materials specified to be salvaged, coordination with other work in progress. Identify components and materials to be salvaged for reuse or recycling with reference to paragraph Existing Facilities to be Removed. Append tracking forms for all removed materials indicating type, quantities, condition, destination, and end use. Coordinate with Waste Management Plan. Include statements affirming Contractor inspection of the existing roof deck and its suitability to perform as a safe working platform or if inspection reveals a safety hazard to workers, state provisions for securing the safety of the workers throughout the performance of the work. Provide procedures for safe conduct of the work in accordance with EM 385-1-1. Plan shall be approved by Contracting Officer prior to work beginning.

1.2.2 General Requirements

Do not begin demolition or deconstruction until authorization is received from the Contracting Officer. The work of this section is to be performed in a manner that maximizes the value derived from the salvage and recycling of materials. Remove rubbish and debris from the project site; do not allow accumulations inside or outside the buildings . The work includes demolition, , salvage of identified items and materials, and removal of resulting rubbish and debris. Remove rubbish and debris from Government property daily, unless otherwise directed. Store materials that cannot be removed daily in areas specified by the Contracting Officer.

In the interest of occupational safety and health, perform the work in accordance with EM 385-1-1, Section 23, Demolition, and other applicable Sections.

1.3 ITEMS TO REMAIN IN PLACE

Take necessary precautions to avoid damage to existing items to remain in place, to be reused, or to remain the property of the Government. Repair or replace damaged items as approved by the Contracting Officer. Coordinate the work of this section with all other work indicated. Construct and maintain shoring, bracing, and supports as required. Ensure that structural elements are not overloaded. Increase structural supports or add new supports as may be required as a result of any cutting, removal, deconstruction, or demolition work performed under this contract. Do not overload structural elements and pavements to remain. Provide new supports and reinforcement for existing construction weakened by demolition, deconstruction, or removal work. Repairs, reinforcement, or structural replacement require approval by the Contracting Officer prior to performing such work.

1.3.1 Existing Construction Limits and Protection

Do not disturb existing construction beyond the extent indicated or necessary for installation of new construction. Provide temporary shoring and bracing for support of building components to prevent settlement or other movement. Provide protective measures to control accumulation and migration of dust and dirt in all work areas. Remove snow, dust, dirt,

and debris from work areas daily.

1.3.2 Weather Protection

For portions of the building to remain, protect building interior and materials and equipment from the weather at all times. Where removal of existing roofing is necessary to accomplish work, have materials and workmen ready to provide adequate and temporary covering of exposed areas.

1.3.3 Utility Service

Maintain existing utilities indicated to stay in service and protect against damage during demolition and deconstruction operations. Prior to start of work, utilities serving each area of alteration or removal will be shut off by the Government and disconnected and sealed by the Contractor .

1.3.4 Facilities

Protect electrical and mechanical services and utilities. Where removal of existing utilities and pavement is specified or indicated, provide approved barricades, temporary covering of exposed areas, and temporary services or connections for electrical and mechanical utilities. Floors, roofs, walls, columns, pilasters, and other structural components that are designed and constructed to stand without lateral support or shoring, and are determined to be in stable condition, must remain standing without additional bracing, shoring, or lateral support until demolished or deconstructed, unless directed otherwise by the Contracting Officer. Ensure that no elements determined to be unstable are left unsupported and place and secure bracing, shoring, or lateral supports as may be required as a result of any cutting, removal, deconstruction, or demolition work performed under this contract.

1.4 BURNING

The use of burning at the project site for the disposal of refuse and debris will not be permitted .

1.5 SUBMITTALS

Government approval is required for submittals with a "G" designation; submittals not having a "G" designation are for Contractor Quality Control approval. Submit the following in accordance with Section 01 33 00 SUBMITTAL PROCEDURES:

SD-01 Preconstruction Submittals

Demolition Plan; G
Existing Conditions

SD-07 Certificates

Notification; G

1.6 QUALITY ASSURANCE

Submit timely notification of demolition projects to Federal, State, regional, and local authorities in accordance with 40 CFR 61, Subpart M. Notify the State's environmental protection agency and the Contracting

Officer in writing 10 working days prior to the commencement of work in accordance with 40 CFR 61, Subpart M. Comply with federal, state, and local hauling and disposal regulations. In addition to the requirements of the "Contract Clauses," conform to the safety requirements contained in ASSE/SAFE A10.6. Comply with the Environmental Protection Agency requirements specified. Use of explosives will not be permitted.

1.6.1 Dust and Debris Control

Prevent the spread of dust and debris to occupied portions of the building and avoid the creation of a nuisance in the surrounding area. Do not use water if it results in hazardous or objectionable conditions such as, but not limited to, ice, flooding, or pollution.

1.7 PROTECTION

1.7.1 Traffic Control Signs

a. Where pedestrian and driver safety is endangered in the area of removal work, use traffic barricades with flashing lights. Notify the Contracting Officer prior to beginning such work.

1.7.2 Protection of Personnel

Before, during and after the demolition and deconstruction work continuously evaluate the condition of the equipment being demolished and deconstructed and take immediate action to protect all personnel working in and around the project site. No area, section, or component of structural the structure or equipment will be allowed to be left standing without sufficient bracing, shoring, or lateral support to prevent collapse or failure while workmen remove debris or perform other work in the immediate area.

1.8 RELOCATIONS

Perform the removal and reinstallation of relocated items as indicated with workmen skilled in the trades involved. Repair or replace items to be relocated which are damaged by the Contractor with new undamaged items as approved by the Contracting Officer.

1.9 EXISTING CONDITIONS

Before beginning any demolition or deconstruction work, survey the site and examine the drawings and specifications to determine the extent of the work. Record existing conditions in the presence of the Contracting Officer showing the condition of structures and other facilities adjacent to areas of alteration or removal. Photographs sized 4 inch will be acceptable as a record of existing conditions. Include in the record the elevation of the top of foundation walls, finish floor elevations, possible conflicting electrical conduits, plumbing lines, alarms systems, the location and extent of existing cracks and other damage and description of surface conditions that exist prior to before starting work. It is the Contractor's responsibility to verify and document all required outages which will be required during the course of work, and to note these outages on the record document. Submit survey results.

PART 2 PRODUCTS

2.1 FILL MATERIAL

a. Comply with excavating, backfilling, and compacting procedures for soils used as backfill material to fill basements, voids, depressions or excavations resulting from demolition or deconstruction of structures. Fill material shall be waste products from demolition or deconstruction until all waste appropriate for this purpose is consumed.

b. Fill material shall conform to the definition of satisfactory soil material as defined in AASHTO M 145, Soil Classification Groups A-1, A-2-4, A-2-5 and A-3. In addition, fill material shall be free from roots and other organic matter, trash, debris, frozen materials, and stones larger than 2 inches in any dimension.

c. Proposed fill material must be sampled and tested by an approved soil testing laboratory, as follows:

Soil classification	AASHTO M 145
Moisture-density relations	AASHTO T 180, Method B or D

PART 3 EXECUTION

3.1 EXISTING FACILITIES TO BE REMOVED

Inspect and evaluate existing structures onsite for reuse. Existing construction scheduled to be removed for reuse shall be disassembled. Dismantled and removed materials are to be separated, set aside, and prepared as specified, and stored or delivered to a collection point for reuse, remanufacture, recycling, or other disposal, as specified. Materials shall be designated for reuse onsite whenever possible.

3.1.1 Structures

a. Remove existing structures indicated to be removed to grade. Interior walls, other than retaining walls and partitions, shall be removed to top of concrete slab on ground. Break up basement slabs to permit drainage. Remove sidewalks, curbs, gutters and street light bases as indicated.

b. Demolish structures in a systematic manner from the top of the structure to the ground. Complete demolition work above each tier or floor before the supporting members on the lower level are disturbed. Demolish concrete and masonry walls in small sections. Remove structural framing members and lower to ground by means of derricks, platforms hoists, or other suitable methods as approved by the Contracting Officer.

c. Locate demolition and deconstruction equipment throughout the structure and remove materials so as to not impose excessive loads to supporting walls, floors, or framing.

d. Building, or the remaining portions thereof, not exceeding 80 feet in height may be demolished by the mechanical method of demolition.

3.1.2 Utilities and Related Equipment

3.1.2.1 General Requirements

Do not interrupt existing utilities serving occupied or used facilities, except when authorized in writing by the Contracting Officer. Do not interrupt existing utilities serving facilities occupied and used by the Government except when approved in writing and then only after temporary utility services have been approved and provided. Do not begin demolition or deconstruction work until all utility disconnections have been made. Shut off and cap utilities for future use, as indicated.

3.1.2.2 Disconnecting Existing Utilities

Remove existing utilities , as indicated and terminate in a manner conforming to the nationally recognized code covering the specific utility and approved by the Contracting Officer. When utility lines are encountered but are not indicated on the drawings, notify the Contracting Officer prior to further work in that area. Remove meters and related equipment and deliver to a location in accordance with instructions of the Contracting Officer.

3.1.3 Paving and Slabs

Remove concrete and asphaltic concrete paving and slabs as indicated. Provide neat sawcuts at limits of pavement removal as indicated. Pavement and slabs designated to be recycled and utilized in this project shall be moved, ground and stored as directed by the Contracting Officer. Pavement and slabs not to be used in this project shall be removed from the Installation at Contractor's expense.

3.1.4 Masonry

Sawcut and remove masonry so as to prevent damage to surfaces to remain, to removed materials being salvaged and to facilitate the installation of new work. Where new masonry adjoins existing, the new work shall abut or tie into the existing construction as indicated. Provide square, straight edges and corners where existing masonry adjoins new work and other locations. Masonry removed in whole blocks shall be salvaged and stored for reuse. .

3.1.5 Concrete

Saw concrete along straight lines to a depth of a minimum 2 inch. Make each cut in walls perpendicular to the face and in alignment with the cut in the opposite face. Break out the remainder of the concrete provided that the broken area is concealed in the finished work, and the remaining concrete is sound. At locations where the broken face cannot be concealed, grind smooth or saw cut entirely through the concrete.

3.1.6 Structural Steel

Dismantle structural steel at field connections and in a manner that will prevent bending or damage. Salvage for recycle structural steel, steel joists, girders, angles, plates, columns and shapes. Do not use flame-cutting torches . Transport steel joists and girders as whole units and not dismantled. Transport structural steel shapes to a designated recycling facility , stacked according to size, type of member and length,

and stored off the ground, protected from the weather.

3.1.7 Miscellaneous Metal

Salvage shop-fabricated items such as access doors and frames, steel gratings, metal ladders, wire mesh partitions, metal railings, metal windows and similar items as whole units. Salvage light-gage and cold-formed metal framing, such as steel studs, steel trusses, metal gutters, roofing and siding, metal toilet partitions, toilet accessories and similar items. Scrap metal shall become the Contractor's property. Recycle scrap metal as part of demolition and deconstruction operations. Provide separate containers to collect scrap metal and transport to a scrap metal collection or recycling facility, in accordance with the Waste Management Plan.

3.1.8 Carpentry

Salvage for recycle lumber, millwork items, and finished boards, and sort by type and size. Recycle salvaged wood unfit for reuse, except stained, painted, or treated wood. Salvage windows, doors, frames, and cabinets, and similar items as whole units, complete with trim and accessories. Salvage hardware attached to units for reuse. Brace the open end of door frames to prevent damage.

3.1.9 Patching

Where removals leave holes and damaged surfaces exposed in the finished work, patch and repair these holes and damaged surfaces to match adjacent finished surfaces, using on-site materials when available. Where new work is to be applied to existing surfaces, perform removals and patching in a manner to produce surfaces suitable for receiving new work. Finished surfaces of patched area shall be flush with the adjacent existing surface and shall match the existing adjacent surface as closely as possible as to texture and finish. Patching shall be as specified and indicated, and shall include:

a. Concrete and Masonry: Completely fill holes and depressions, caused by previous physical damage or left as a result of removals in existing masonry walls to remain, with an approved masonry patching material, applied in accordance with the manufacturer's printed instructions.

b. Where existing partitions have been removed leaving damaged or missing resilient tile flooring, patch to match the existing floor tile.

c. Patch acoustic lay-in ceiling where partitions have been removed. The transition between the different ceiling heights shall be effected by continuing the higher ceiling level over to the first runner on the lower ceiling and closing the vertical opening with a painted sheet metal strip.

3.1.10 Mechanical Equipment and Fixtures

Disconnect mechanical hardware at the nearest connection to existing services to remain, unless otherwise noted. Disconnect mechanical equipment and fixtures at fittings. Remove service valves attached to the unit. Salvage each item of equipment and fixtures as a whole unit; listed, indexed, tagged, and stored. Salvage each unit with its normal operating auxiliary equipment. Transport salvaged equipment and fixtures, including motors and machines, to a designated on station storage area as

directed by the Contracting Officer. Do not remove equipment until approved. Do not offer low-efficiency equipment for reuse; provide to recycling service for disassembly and recycling of parts.

3.1.10.1 Preparation for Storage

Remove water, dirt, dust, and foreign matter from units; tanks, piping and fixtures shall be drained; interiors, if previously used to store flammable, explosive, or other dangerous liquids, shall be steam cleaned. Seal openings with caps, plates, or plugs. Secure motors attached by flexible connections to the unit. Change lubricating systems with the proper oil or grease.

3.1.10.2 Piping

Disconnect piping at unions, flanges and valves, and fittings as required to reduce the pipe into straight lengths for practical storage. Store salvaged piping according to size and type. If the piping that remains can become pressurized due to upstream valve failure, end caps, blind flanges, or other types of plugs or fittings with a pressure gage and bleed valve shall be attached to the open end of the pipe to ensure positive leak control. Carefully dismantle piping that previously contained gas, gasoline, oil, or other dangerous fluids, with precautions taken to prevent injury to persons and property. Store piping outdoors until all fumes and residues are removed. Box prefabricated supports, hangers, plates, valves, and specialty items according to size and type. Wrap sprinkler heads individually in plastic bags before boxing. Classify piping not designated for salvage, or not reusable, as scrap metal.

3.1.10.3 Ducts

Classify removed duct work as scrap metal.

3.1.10.4 Fixtures, Motors and Machines

Remove and salvage fixtures, motors and machines associated with plumbing, heating, air conditioning, refrigeration, and other mechanical system installations. Salvage, box and store auxiliary units and accessories with the main motor and machines. Tag salvaged items for identification, storage, and protection from damage. Classify broken, damaged, or otherwise unserviceable units and not caused to be broken, damaged, or otherwise unserviceable as debris to be disposed of by the Contractor.

3.1.11 Electrical Equipment and Fixtures

Salvage motors, motor controllers, and operating and control equipment that are attached to the driven equipment. Salvage wiring systems and components. Box loose items and tag for identification. Disconnect primary, secondary, control, communication, and signal circuits at the point of attachment to their distribution system.

3.1.11.1 Fixtures

Remove and salvage electrical fixtures. Salvage unprotected glassware from the fixture and salvage separately. Salvage incandescent, mercury-vapor, and fluorescent lamps and fluorescent ballasts manufactured prior to 1978, boxed and tagged for identification, and protected from breakage.

3.1.11.2 Electrical Devices

Remove and salvage switches, switchgear, transformers, conductors including wire and nonmetallic sheathed and flexible armored cable, regulators, meters, instruments, plates, circuit breakers, panelboards, outlet boxes, and similar items. Box and tag these items for identification according to type and size.

3.1.11.3 Wiring Ducts or Troughs

Remove and salvage wiring ducts or troughs. Dismantle plug-in ducts and wiring troughs into unit lengths. Remove plug-in or disconnecting devices from the busway and store separately.

3.1.11.4 Conduit and Miscellaneous Items

Salvage conduit except where embedded in concrete or masonry. Consider corroded, bent, or damaged conduit as scrap metal. Sort straight and undamaged lengths of conduit according to size and type. Classify supports, knobs, tubes, cleats, and straps as debris to be removed and disposed.

3.1.12 Elevators and Hoists

Remove elevators, hoists, and similar conveying equipment and salvage as whole units, to the most practical extent. Remove and prepare items for salvage without damage to any of the various parts. Salvage and store rails for structural steel with the equipment as an integral part of the unit.

3.1.13 Items With Unique/Regulated Disposal Requirements

Remove and dispose of items with unique or regulated disposal requirements in the manner dictated by law or in the most environmentally responsible manner.

3.2 DISPOSITION OF MATERIAL

3.2.1 Title to Materials

Except for salvaged items specified in related Sections, and for materials or equipment scheduled for salvage, all materials and equipment removed and not reused or salvaged, shall become the property of the Contractor and shall be removed from Government property. Title to materials resulting from demolition and deconstruction, and materials and equipment to be removed, is vested in the Contractor upon approval by the Contracting Officer of the Contractor's demolition, deconstruction, and removal procedures, and authorization by the Contracting Officer to begin demolition and deconstruction. The Government will not be responsible for the condition or loss of, or damage to, such property after contract award. Showing for sale or selling materials and equipment on site is prohibited.

3.2.2 Reuse of Materials and Equipment

Remove and store materials and equipment indicated to be reused or relocated to prevent damage, and reinstall as the work progresses.

3.2.3 Salvaged Materials and Equipment

Remove materials and equipment that are indicated (block wall, etc.) to be removed by the Contractor and that are to remain the property of the Government, and deliver to a storage site , as directed of the work site.

a. Salvage items and material to the maximum extent possible.

b. Store all materials salvaged for the Contractor as approved by the Contracting Officer and remove from Government property before completion of the contract. On site sales of salvaged material is prohibited.

c. Remove salvaged items to remain the property of the Government in a manner to prevent damage, and packed or crated to protect the items from damage while in storage or during shipment. Items damaged during removal or storage must be repaired or replaced to match existing items. Properly identify the contents of containers. Deliver the following items reserved as property of the Government to the areas designated: Block wall surrounding coal yard.

3.2.4 Transportation Guidance

Ship all ODS containers in accordance with MIL-STD-129, DLA 4145.25 (also referenced one of the following: Army Regulation 700-68, Naval Supply Instruction 4440.128C, Marine Corps Order 10330.2C, and Air Force Regulation 67-12), 49 CFR 173.301, and DOD 4000.25-1-M.

3.2.5 Unsalvageable and Non-Recyclable Material

Dispose of unsalvageable and non-recyclable noncombustible material as specified in accordance with Section 01 74 19 CONSTRUCTION AND WASTE MANAGEMENT..

3.3 CLEANUP

Remove debris and rubbish from basement and similar excavations. Remove and transport the debris in a manner that prevents spillage on streets or adjacent areas. Apply local regulations regarding hauling and disposal.

3.4 DISPOSAL OF REMOVED MATERIALS

3.4.1 Regulation of Removed Materials

Dispose of debris, rubbish, scrap, and other nonsalvageable materials resulting from removal operations in accordance with Section 01 74 19 CONSTRUCTION AND WASTE MANAGEMENT.

3.4.2 Removal to Spoil Areas on Government Property

Transport noncombustible materials removed from demolition and deconstruction structures to designated spoil areas on Government property.

3.4.3 Removal from Government Property

Transport waste materials removed from demolished and deconstructed structures, except waste soil, from Government property for legal disposal. Dispose of waste soil as directed.

3.5 REUSE OF SALVAGED ITEMS

Recondition salvaged materials and equipment designated for reuse before installation. Replace items damaged during removal and salvage operations or restore them as necessary to usable condition.

-- End of Section --

THIS PAGE HAS BEEN INTENTIONALLY LEFT BLANK

SECTION 02 82 16.00 20

ENGINEERING CONTROL OF ASBESTOS CONTAINING MATERIALS
08/11

PART 1 GENERAL

1.1 REFERENCES

The publications listed below form a part of this specification to the extent referenced. The publications are referred to within the text by the basic designation only.

AMERICAN INDUSTRIAL HYGIENE ASSOCIATION (AIHA)

AIHA Z88.6	(2006) Respiratory Protection - Respirator Use-Physical Qualifications for Personnel

AMERICAN SOCIETY OF SANITARY ENGINEERING (ASSE)

ASSE Z9.2	(2012) Fundamentals Governing the Design and Operation of Local Exhaust Ventilation Systems

ASTM INTERNATIONAL (ASTM)

ASTM C732	(2006; R 2012) Aging Effects of Artificial Weathering on Latex Sealants
ASTM D2794	(1993; R 2010) Resistance of Organic Coatings to the Effects of Rapid Deformation (Impact)
ASTM D522/D522M	(2014) Mandrel Bend Test of Attached Organic Coatings
ASTM E119	(2016) Standard Test Methods for Fire Tests of Building Construction and Materials
ASTM E1368	(2014) Visual Inspection of Asbestos Abatement Projects
ASTM E736	(2000; R 2011) Cohesion/Adhesion of Sprayed Fire-Resistive Materials Applied to Structural Members
ASTM E84	(2015b) Standard Test Method for Surface Burning Characteristics of Building Materials
ASTM E96/E96M	(2016) Standard Test Methods for Water Vapor Transmission of Materials

U.S. ENVIRONMENTAL PROTECTION AGENCY (EPA)

EPA 560/5-85-024	(1985) Guidance for Controlling Asbestos-Containing Materials in Buildings

(Purple Book)

U.S. NATIONAL ARCHIVES AND RECORDS ADMINISTRATION (NARA)

29 CFR 1926.103	Respiratory Protection
29 CFR 1926.1101	Asbestos
29 CFR 1926.200	Accident Prevention Signs and Tags
29 CFR 1926.51	Sanitation
29 CFR 1926.59	Hazard Communication
40 CFR 61-SUBPART A	General Provisions
40 CFR 61-SUBPART M	National Emission Standard for Asbestos
40 CFR 763	Asbestos

U.S. NAVAL FACILITIES ENGINEERING COMMAND (NAVFAC)

ND OPNAVINST 5100.23	(2005; Rev G) Navy Occupational Safety and Health (NAVOSH) Program Manual

UNDERWRITERS LABORATORIES (UL)

UL 586	(2009; Reprint Sep 2014) Standard for High-Efficiency Particulate, Air Filter Units

1.2 DEFINITIONS

1.2.1 ACM

Asbestos Containing Materials.

1.2.2 Amended Water

Water containing a wetting agent or surfactant with a maximum surface tension of 0.00042 psi.

1.2.3 Area Sampling

Sampling of asbestos fiber concentrations which approximates the concentrations of asbestos in the theoretical breathing zone but is not actually collected in the breathing zone of an employee.

1.2.4 Asbestos

The term asbestos includes chrysotile, amosite, crocidolite, tremolite asbestos, anthophyllite asbestos, and actinolite asbestos and any of these minerals that has been chemically treated or altered. Materials are considered to contain asbestos if the asbestos content of the material is determined to be at least one percent.

1.2.5 Asbestos Control Area

That area where asbestos removal operations are performed which is

isolated by physical boundaries which assist in the prevention of the uncontrolled release of asbestos dust, fibers, or debris.

1.2.6 Asbestos Fibers

Those fibers having an aspect ratio of at least 3:1 and longer than 5 micrometers as determined by National Institute for Occupational Safety and Health (NIOSH) Method 7400.

1.2.7 Asbestos Permissible Exposure Limit

0.1 fibers per cubic centimeter of air as an 8-hour time weighted average measured in the breathing zone as defined by 29 CFR 1926.1101 or other Federal legislation having legal jurisdiction for the protection of workers health.

1.2.8 Background

The ambient airborne asbestos concentration in an uncontaminated area as measured prior to any asbestos hazard abatement efforts. Background concentrations for other (contaminated) areas are measured in similar but asbestos free locations.

1.2.9 Contractor

The Contractor is that individual, or entity under contract to the Navy to perform the herein listed work.

1.2.10 Competent Person

A person meeting the requirements for competent person as specified in 29 CFR 1926.1101 including a person capable of identifying existing asbestos hazards in the workplace and selecting the appropriate control strategy for asbestos exposure, who has the authority to take prompt corrective measures to eliminate them, and is specifically trained in a training course which meet the criteria of EPA's Model Accreditation Plan (40 CFR 763) for project designer or supervisor, or its equivalent. The competent person shall have a current State of North Carolina.

1.2.11 Encapsulation

The abatement of an asbestos hazard through the appropriate use of chemical encapsulants.

1.2.12 Encapsulants

Specific materials in various forms used to chemically or physically entrap asbestos fibers in various configurations to prevent these fibers from becoming airborne. There are four types of encapsulants as follows which must comply with performance requirements as specified herein.

a. Removal Encapsulant (can be used as a wetting agent)

b. Bridging Encapsulant (used to provide a tough, durable surface coating to asbestos containing material)

c. Penetrating Encapsulant (used to penetrate the asbestos containing material encapsulating all asbestos fibers and preventing fiber release due to routine mechanical damage)

d. Lock-Down Encapsulant (used to seal off or "lock-down" minute asbestos fibers left on surfaces from which asbestos containing material has been removed).

1.2.13 Friable Asbestos Material

One percent asbestos containing material that can be crumbled, pulverized, or reduced to powder by hand pressure when dry.

1.2.14 Glovebag Technique

Those asbestos removal and control techniques put forth in 29 CFR 1926.1101 Appendix G.

1.2.15 HEPA Filter Equipment

High efficiency particulate air (HEPA) filtered vacuum and/or exhaust ventilation equipment with a filter system capable of collecting and retaining asbestos fibers. Filters shall retain 99.97 percent of particles 0.3 microns or larger as indicated in UL 586.

1.2.16 Navy Consultant (NC)

That qualified person employed directly by the Government to monitor, sample, inspect the work or in some other way advise the Contracting Officer. The NC is normally a private consultant, but can be an employee of the Government.

1.2.17 Negative Pressure Enclosure (NPE)

That engineering control technique described as a negative pressure enclosure in 29 CFR 1926.1101.

1.2.18 Nonfriable Asbestos Material

Material that contains asbestos in which the fibers have been immobilized by a bonding agent, coating, binder, or other material so that the asbestos is well bound and will not normally release asbestos fibers during any appropriate use, handling, storage or transportation. It is understood that asbestos fibers may be released under other conditions such as demolition, removal, or mishap.

1.2.19 Personal Sampling

Air sampling which is performed to determine asbestos fiber concentrations within the breathing zone of a specific employee, as performed in accordance with 29 CFR 1926.1101.

1.2.20 Private Qualified Person (PQP)

That qualified person hired by the Contractor to perform the herein listed tasks.

1.2.21 Qualified Person (QP)

A Registered Architect, Professional Engineer, Certified Industrial Hygienist, consultant or other qualified person who has successfully completed training and is therefore accredited under a legitimate State

Model Accreditation Plan as described in 40 CFR 763 as a Building Inspector, Contractor/Supervisor Abatement Worker, and Asbestos Project Designer; and has successfully completed the National Institute of Occupational Safety and Health (NIOSH) 582 course "Sampling and Evaluating Airborne Asbestos Dust" or equivalent. The QP must be qualified to perform visual inspections as indicated in ASTM E1368. The QP shall be appropriately licensed in the State of North Carolina.

1.2.22 TEM

Refers to Transmission Electron Microscopy.

1.2.23 Time Weighted Average (TWA)

The TWA is an 8-hour time weighted average airborne concentration of asbestos fibers.

1.2.24 Wetting Agent

A chemical added to water to reduce the water's surface tension thereby increasing the water's ability to soak into the material to which it is applied. An equivalent wetting agent must have a surface tension of at most 0.00042 psi.

1.3 REQUIREMENTS

1.3.1 Description of Work

The work covered by this section includes the handling and control of asbestos containing materials and describes some of the resultant procedures and equipment required to protect workers, the environment and occupants of the building or area, or both, from contact with airborne asbestos fibers. The work also includes the disposal of any asbestos containing materials generated by the work. More specific operational procedures shall be outlined in the Asbestos Hazard Abatement Plan called for elsewhere in this specification. The asbestos work includes the demolition and removal of mudded fittings and elbows on high and low pressure steam lines, boiler breaching insulation, fire brick, ashpalt roof on the ash silo, and roof flashing on the ash silowhich is governed by 40 CFR 763. Under normal conditions non-friable or chemically bound materials containing asbestos would not be considered hazardous; however, this material may release airborne asbestos fibers during demolition and removal and therefore must be handled in accordance with the removal and disposal procedures as specified herein. Provide negative pressure enclosure for the removal materials in occupied spaces and use techniques as outlined in this specification. The Navy will evacuate the work area during the asbestos abatement work. All asbestos removal work shall be supervised by a competent person as specified herein.

1.3.2 Medical Requirements

Provide medical requirements including but not limited to medical surveillance and medical record keeping as listed in 29 CFR 1926.1101.

1.3.2.1 Medical Examinations

Before exposure to airborne asbestos fibers, provide workers with a comprehensive medical examination as required by 29 CFR 1926.1101 or other pertinent State or local directives. This requirement must have been

satisfied within the 12 months prior to the start of work on this contract. The same medical examination shall be given on an annual basis to employees engaged in an occupation involving asbestos and within 30 calendar days before or after the termination of employment in such occupation. Specifically identify x-ray films of asbestos workers to the consulting radiologist and mark medical record jackets with the word "ASBESTOS."

1.3.2.2 Medical Records

Maintain complete and accurate records of employees' medical examinations, medical records, and exposure data for a period of 50 years after termination of employment and make records of the required medical examinations and exposure data available for inspection and copying to: The Assistant Secretary of Labor for Occupational Safety and Health (OSHA), or authorized representatives of them, and an employee's physician upon the request of the employee or former employee.

1.3.3 Employee Training

Submit certificates, prior to the start of work but after the main abatement submittal, signed by each employee indicating that the employee has received training in the proper handling of materials and wastes that contain asbestos in accordance with 40 CFR 763; understands the health implications and risks involved, including the illnesses possible from exposure to airborne asbestos fibers; understands the use and limits of the respiratory equipment to be used; and understands the results of monitoring of airborne quantities of asbestos as related to health and respiratory equipment as indicated in 29 CFR 1926.1101 on an initial and annual basis. Certificates shall be organized by individual worker, not grouped by type of certification. Post appropriate evidence of compliance with the training requirements of 40 CFR 763. Train all personnel involved in the asbestos control work in accordance with United States Environmental Protection Agency (USEPA) Asbestos Hazard Emergency Response Act (AHERA) training criteria or State training criteria whichever is more stringent. The Contractor shall document the training by providing: dates of training, training entity, course outline, names of instructors, and qualifications of instructors upon request by the Contracting Officer. Furnish each employee with respirator training and fit testing administered by the PQP as required by 29 CFR 1926.1101. Fully cover engineering and other hazard control techniques and procedures. All asbestos workers shall have a current State of North Carolina.

1.3.4 Permits , Licenses, and Notifications

Obtain necessary permits and licenses in conjunction with asbestos removal, encapsulation, hauling, and disposition, and furnish notification of such actions required by Federal, State, regional, and local authorities prior to the start of work. Notify the Regional Office of the United States Environmental Protection Agency (USEPA) State's environmental protection agency local air pollution control district/agency and the Contracting Officer in writing 20 working days prior to commencement of work in accordance with 40 CFR 61-SUBPART M. Notify the Contracting Officer and other appropriate Government agencies in writing 20 working days prior to the start of asbestos work as indicated in applicable laws, ordinances, criteria, rules, and regulations. Submit copies of all Notifications to the Contracting Officer.

1.3.5 Environment, Safety and Health Compliance

In addition to detailed requirements of this specification, comply with those applicable laws, ordinances, criteria, rules, and regulations of Federal, State, regional, and local authorities regarding handling, storing, transporting, and disposing of asbestos waste materials. Comply with the applicable requirements of the current issue of 29 CFR 1926.1101, 40 CFR 61-SUBPART A, 40 CFR 61-SUBPART M, and ND OPNAVINST 5100.23. Submit matters of interpretation of standards to the appropriate administrative agency for resolution before starting the work. Where the requirements of this specification, applicable laws, rules, criteria, ordinances, regulations, and referenced documents vary, the most stringent requirement as defined by the Government shall apply. The following laws, ordinances, criteria, rules and regulations regarding removal, handling, storing, transporting and disposing of asbestos materials apply:

a. NCGS Chapter 130A Article 10.

1.3.6 Respiratory Protection Program

Establish and implement a respirator program as required by AIHA Z88.6, 29 CFR 1926.1101, and 29 CFR 1926.103. Submit a written description of the program to the Contracting Officer. Submit a written program manual or operating procedure including methods of compliance with regulatory statutes.

1.3.6.1 Respirator Program Records

Submit records of the respirator program as required by AIHA Z88.6, 29 CFR 1926.103, and 29 CFR 1926.1101.

1.3.7 Asbestos Hazard Control Supervisor

The Contractor shall be represented on site by a supervisor, trained using the model Contractor accreditation plan as indicated in the Federal statutes for all portions of the herein listed work.

1.3.8 Hazard Communication

Adhere to all parts of 29 CFR 1926.59 and provide the Contracting Officer with a copy of the Material Safety Data Sheets (MSDS) for all materials brought to the site.

1.3.9 Asbestos Hazard Abatement Plan

Submit a detailed plan of the safety precautions such as lockout, tagout, tryout, fall protection, and confined space entry procedures and equipment and work procedures to be used in the removaland demolition of materials containing asbestos. The plan, not to be combined with other hazard abatement plans, shall be prepared, signed, and sealed by the PQP. Provide a Table of Contents for each abatement submittal, which shall follow the sequence of requirements in the contract. Such plan shall include but not be limited to the precise personal protective equipment to be used including, but not limited to, respiratory protection, type of whole-body protection , the location of asbestos control areas including clean and dirty areas, buffer zones, showers, storage areas, change rooms, removal method, interface of trades involved in the construction, sequencing of asbestos related work, disposal plan, type of wetting agent and asbestos sealer to be used, locations of local exhaust equipment,

planned air monitoring strategies, and a detailed description of the method to be employed in order to control environmental pollution. The plan shall also include (both fire and medical emergency) response plans. The Asbestos Hazard Abatement Plan must be approved in writing prior to starting any asbestos work. The Contractor, Asbestos Hazard Control Supervisor, and PQP shall meet with the Contracting Officer prior to beginning work, to discuss in detail the Asbestos Hazard Abatement Plan, including work procedures and safety precautions. Once approved by the Contracting Officer, the plan will be enforced as if an addition to the specification. Any changes required in the specification as a result of the plan shall be identified specifically in the plan to allow for free discussion and approval by the Contracting Officer prior to starting work.

1.3.10 Testing Laboratory

Submit the name, address, and telephone number of each testing laboratory selected for the analysis, and reporting of airborne concentrations of asbestos fibers along with evidence that each laboratory selected holds the appropriate State license and/or permits andcertification that each laboratory is American Industrial Hygiene Association (AIHA) accredited and that persons counting the samples have been judged proficient by current inclusion on the AIHA Asbestos Analysis Registry (AAR) and successful participation of the laboratory in the Proficiency Analytical Testing (PAT) Program. Where analysis to determine asbestos content in bulk materials or transmission electron microscopy is required, submit evidence that the laboratory is accredited by the National Institute of Science and Technology (NIST) under National Voluntary Laboratory Accreditation Program (NVLAP) for asbestos analysis. The testing laboratory firm shall be independent of the asbestos contractor and shall have no employee or employer relationship which could constitute a conflict of interest.

1.3.11 Landfill Approval

Submit written evidence that the landfill is for asbestos disposal by the U.S. Environmental Protection Agency, Region 3, Air Enforcement Section (38W12), and local regulatory agencies. Within 3 working days after delivery, submit detailed delivery tickets, prepared, signed, and dated by an agent of the landfill, certifying the amount of asbestos materials delivered to the landfill. Submit a copy of the waste shipment records within 1 day of the shipment leaving the project site.

1.3.12 Medical Certification

Provide a written certification for each worker and supervisor, signed by a licensed physician indicating that the worker and supervisor has met or exceeded all of the medical prerequisites listed herein and in 29 CFR 1926.1101 and 29 CFR 1926.103 as prescribed by law. Submit certificates prior to the start of work but after the main abatement submittal.

1.4 SUBMITTALS

Government approval is required for submittals with a "G" designation; submittals not having a "G" designation are for Contractor Quality Control approval. Submit the following in accordance with Section 01 33 00 SUBMITTAL PROCEDURES:

SD-03 Product Data

Local Exhaust Equipment; G

Vacuums; G

Respirators; G

Pressure Differential Automatic Recording Instrument; G

Amended Water; G

Material Safety Data Sheets (Msds) for all materials proposed for transport to the project site; G

Encapsulants; G

SD-06 Test Reports

Air Sampling Results; G

Pressure Differential Recordings For Local Exhaust System; G

Asbestos Disposal Quantity Report; G

Encapsulation Test Patches; G

Clearance Sampling; G

SD-07 Certificates

Asbestos Hazard Abatement Plan; G

Testing Laboratory; G

Private Qualified Person Documentation; G

Contractor's License; G

Competent Person documentation; G

Worker's License; G]

Landfill Approval; G

Employee Training; G

Medical Certification requirements; G

Waste Shipment Records and if applicable exemption report; G

Respiratory Protection Program; G

Delivery Tickets; G

Vacuums; G

Water Filtration Equipment; G

Ventilation Systems; G

Other Equipment Used To Contain Airborne Asbestos Fibers; G

Chemical Encapsulants Sealers; G

Notifications

Show compliance with ASSE Z9.2 by providing manufacturers' certifications.

SD-11 Closeout Submittals

Notifications; G

Rental Equipment; G

Respirator Program Records; G

Permits and Licenses; G

Protective Clothing Decontamination Quality Control Records; G

1.5 QUALITY ASSURANCE

1.5.1 Private Qualified Person Documentation

Submit the name, address, and telephone number of the Private Qualified Person (PQP) selected to prepare the Asbestos Hazard Abatement Plan, direct monitoring and training, and documented evidence that the PQP has successfully completed training in and is accredited and where required is certified as, a Building Inspector, Contractor/Supervisor Abatement Worker, and Asbestos Project Designer as described by 40 CFR 763 and has successfully completed the National Institute of Occupational Safety and Health (NIOSH) 582 course "Sampling and Evaluating Airborne Asbestos Dust" or equivalent. The PQP shall be appropriately licensed in the State of North Carolina. The PQP and the asbestos contractor shall not have an employee/employer relationship or financial relationship which could constitute a conflict of interest. The PQP shall be a first tier subcontractor.

1.5.2 Competent Person Documentation

Submit training certification and a current State of North Carolina Asbestos Contractor's and Supervisor's License.

1.5.3 Worker's License

Submit documentation that requires all workers have a current State of North Carolina Asbestos Workers License.

1.5.4 Contractor's License

Contractor shall have currentNorth Carolina asbestos contractor's license. Submit a copy of the asbestos contractor's license issued by the State of North Carolina.

1.5.5 Air Sampling Results

Complete fiber counting and provide results to the PQP and NC for review within 16 hours of the "time off" of the sample pump. Notify the

Contracting Officer immediately of any airborne levels of asbestos fibers in excess of the acceptable limits. Submit sampling results to the Contracting Officer and the affected Contractor employees where required by law within 3 working days, signed by the testing laboratory employee performing air sampling, the employee that analyzed the sample, and the PQP and NC. Notify the Contractor and the Contracting Officer immediately of any variance in the pressure differential which could cause adjacent unsealed areas to have asbestos fiber concentrations in excess of 0.01 fibers per cubic centimeter or background whichever is higher. In no circumstance shall levels exceed 0.1 fibers per cubic centimeter.

1.5.6 Pressure Differential Recordings for Local Exhaust System

Provide a local exhaust system that creates a negative pressure of at least 0.02 inches of water relative to the pressure external to the enclosure and operate it continuously, 24 hours a day, until the temporary enclosure of the asbestos control area is removed. Submit pressure differential recordings for each work day to the PQP and NC for review and to the Contracting Officer within 24 hours from the end of each work day.

1.6 EQUIPMENT

1.6.1 Rental Equipment

Provide a copy of the written notification to the rental company concerning the intended use of the equipment and the possibility of asbestos contamination of the equipment.

PART 2 PRODUCTS

2.1 ENCAPSULANTS

Shall conform to current USEPA requirements, shall contain no toxic or hazardous substances as defined in 29 CFR 1926.59, and shall conform to the following performance requirements.

2.1.1 Removal Encapsulants

Requirement	Test Standard
Flame Spread - 25, Smoke Emission - 50	ASTM E84
Life Expectancy - 20 years	ASTM C732 Accelerated Aging Test
Permeability - Minimum 0.4 perms	ASTM E96/E96M
Fire Resistance - Negligible affect on fire resistance rating over 3 hour test (Classified by UL for use over fibrous and cementitious sprayed fireproofing)	ASTM E119
Impact Resistance - Minimum 43 in/lb	ASTM D2794 Gardner Impact Test

Requirement	Test Standard
Flexibility - no rupture or cracking	ASTM D522/D522M Mandrel Bend Test

2.1.2 Bridging Encapsulant

Requirement	Test Standard
Flame Spread - 25, Smoke Emission - 50	ASTM E84
Life Expectancy - 20 years	ASTM C732 Accelerated Aging Test
Permeability - Minimum 0.4 perms	ASTM E96/E96M
Fire Resistance - Negligible affect on fire resistance rating over 3 hour test (Classified by UL for use over fibrous and cementitious sprayed fireproofing)	ASTM E119
Impact Resistance - Minimum 43 in/lb	ASTM D2794 Gardner Impact Test
Flexibility - no rupture or cracking	ASTM D522/D522M Mandrel Bend Test

2.1.3 Penetrating Encapsulant

Requirement	Test Standard
Flame Spread - 25, Smoke Emission - 50	ASTM E84
Life Expectancy - 20 years	ASTM C732 Accelerated Aging Test
Permeability - Minimum 0.4 perms	ASTM E96/E96M
Cohesion/Adhesion Test - 50 pounds of force/foot	ASTM E119
Fire Resistance - Negligible affect on fire resistance rating over 3 hour test (Classified by UL for use over fibrous and cementitious sprayed fireproofing)	ASTM E119

Requirement	Test Standard
Impact Resistance - Minimum 43 in/lb	ASTM D2794 Gardner Impact Test
Flexibility - no rupture or cracking	ASTM D522/D522M Mandrel Bend Test

2.1.4 Lock-down Encapsulant

Requirement	Test Standard
Flame Spread - 25, Smoke Emission - 50	ASTM E84
Life Expectancy - 20 years	ASTM C732 Accelerated Aging Test
Permeability - Minimum 0.4 perms	ASTM E96/E96M
Fire Resistance - Negligible affect on fire resistance rating over 3 hour test (Tested with fireproofing over encapsulant applied directly to steel member)	ASTM E119
Bond Strength: 100 pounds of force/foot	ASTM E736
(Tests compatibility with cementitious and fibrous fireproofing)	

PART 3 EXECUTION

3.1 EQUIPMENT

At all times, provide the Contracting Officer or the Contracting Officer's Representative, with at least one complete sets of personal protective equipment as required for entry to and inspection of the asbestos control area. Provide equivalent training to the Contracting Officer or a designated representative as provided to Contractor employees in the use of the required personal protective equipment. Provide manufacturer's certificate of compliance for all equipment used to contain airborne asbestos fibers.

3.1.1 Respirators

Select respirators from those approved by the National Institute for Occupational Safety and Health (NIOSH), Department of Health and Human Services.

3.1.1.1 Respirators for Handling Asbestos

Provide personnel engaged in pre-cleaning, cleanup, handling, removal and

demolition of asbestos materials with respiratory protection as indicated in 29 CFR 1926.1101 and 29 CFR 1926.103.

3.1.2 Exterior Whole Body Protection

3.1.2.1 Outer Protective Clothing

Provide personnel exposed to asbestos with disposable "non-breathable," whole body outer protective clothing, head coverings, gloves, and foot coverings. Provide disposable plastic or rubber gloves to protect hands. Cloth gloves may be worn inside the plastic or rubber gloves for comfort, but shall not be used alone. Make sleeves secure at the wrists, make foot coverings secure at the ankles, and make clothing secure at the neck by the use of tape.

3.1.2.2 Work Clothing

Provide cloth work clothes for wear under the outer protective clothing and foot coverings and either dispose of or properly decontaminate them as recommended by the NC and PQP after each use.

3.1.2.3 Personal Decontamination Unit

Provide a temporary, negative pressure unit with a separate decontamination locker room and clean locker room with a shower that complies with 29 CFR 1926.51(f)(4)(ii) through (V) in between for personnel required to wear whole body protective clothing. Provide two separate lockers for each asbestos worker, one in each locker room. Keep street clothing and street shoes in the clean locker. HEPA vacuum and remove asbestos contaminated disposable protective clothing while still wearing respirators at the boundary of the asbestos work area and seal in impermeable bags or containers for disposal. Do not wear work clothing between home and work. Locate showers between the decontamination locker room and the clean locker room and require that all employees shower before changing into street clothes. Collect used shower water and filter with approved water filtration equipment to remove asbestos contamination. Dispose of filters and residue as asbestos waste. Discharge clean water to the sanitary system. Dispose of asbestos contaminated work clothing as asbestos contaminated waste . Decontamination units shall be physically attached to the asbestos control area. Build both a personnel decontamination unit and an equipment decontamination unit onto and integral with each asbestos control area.

3.1.2.4 Eye Protection

Provide goggles to personnel engaged in asbestos abatement operations when the use of a full face respirator is not required.

3.1.3 Warning Signs and Labels

Provide bilingual warning signs printed in English and Spanish at all approaches to asbestos control areas. Locate signs at such a distance that personnel may read the sign and take the necessary protective steps required before entering the area. Provide labels and affix to all asbestos materials, scrap, waste, debris, and other products contaminated with asbestos.

3.1.3.1 Warning Sign

Provide vertical format conforming to 29 CFR 1926.200, and 29 CFR 1926.1101 minimum 20 by 14 inches displaying the following legend in the lower panel:

Legend	Notation
Danger	one inch Sans Serif Gothic or Block
Asbestos	one inch Sans Serif Gothic or Block
Cancer and Lung Disease Hazard	1/4 inch Sans Serif Gothic or Block
Authorized Personnel Only	1/4 inch Sans Serif Gothic or Block
Respirators and Protective Clothing are Required in this Area	1/4 inch Sans Serif Gothic or Block

Spacing between lines shall be at least equal to the height of the upper of any two lines.

3.1.3.2 Warning Labels

Provide labels conforming to 29 CFR 1926.1101 of sufficient size to be clearly legible, displaying the following legend:

DANGER
CONTAINS ASBESTOS FIBERS
AVOID CREATING DUST
CANCER AND LUNG DISEASE HAZARD
BREATHING ASBESTOS DUST MAY CAUSE SERIOUS BODILY HARM

3.1.4 Local Exhaust System

Provide a local exhaust system in the asbestos control area in accordance with ASSE Z9.2 and 29 CFR 1926.1101 that will provide at least four air changes per hour inside of the negative pressure enclosure. Local exhaust equipment shall be operated 24 hours per day, until the asbestos control area is removed and shall be leak proof to the filter and equipped with HEPA filters. Maintain a minimum pressure differential in the control area of minus 0.02 inch of water column relative to adjacent, unsealed areas. Provide continuous 24-hour per day monitoring of the pressure differential with a pressure differential automatic recording instrument. In no case shall the building ventilation system be used as the local

exhaust system for the asbestos control area. Filters on exhaust equipment shall conform to ASSE Z9.2 and UL 586. The local exhaust system shall terminate out of doors and remote from any public access or ventilation system intakes.

3.1.5 Tools

Vacuums shall be leak proof to the filter and equipped with HEPA filters. Filters on vacuums shall conform to ASSE Z9.2 and UL 586. Do not use power tools to remove asbestos containing materials unless the tool is equipped with effective, integral HEPA filtered exhaust ventilation systems. Remove all residual asbestos from reusable tools prior to storage or reuse.

3.1.6 Rental Equipment

If rental equipment is to be used, furnish written notification to the rental agency concerning the intended use of the equipment and the possibility of asbestos contamination of the equipment.

3.2 WORK PROCEDURE

Perform asbestos related work in accordance with 29 CFR 1926.1101, 40 CFR 61-SUBPART M, and as specified herein. Use wet removal procedures and negative pressure enclosure techniques. Personnel shall wear and utilize protective clothing and equipment as specified herein. Eating, smoking, drinking, chewing gum, tobacco, or applying cosmetics shall not be permitted in the asbestos work or control areas. Personnel of other trades not engaged in the removal and demolition of asbestos containing material shall not be exposed at any time to airborne concentrations of asbestos unless all the personnel protection and training provisions of this specification are complied with by the trade personnel. Shut down the building heating, ventilating, and air conditioning system, cap the openings to the system, prior to the commencement of asbestos work. Disconnect electrical service when wet removal is performed and provide temporary electrical service with verifiable ground fault circuit interrupter (GFCI) protection prior to the use of any water or encapsulant. If an asbestos fiber release or spill occurs outside of the asbestos control area, stop work immediately, correct the condition to the satisfaction of the Contracting Officer including clearance sampling, prior to resumption of work.

3.2.1 Protection of Existing Work to Remain

Perform work without damage or contamination of adjacent work. Where such work is damaged or contaminated as verified by the Contracting Officer using visual inspection or sample analysis, it shall be restored to its original condition or decontaminated by the Contractor at no expense to the Government as deemed appropriate by the Contracting Officer. This includes inadvertent spill of dirt, dust, or debris in which it is reasonable to conclude that asbestos may exist. When these spills occur, stop work immediately. Then clean up the spill. When satisfactory visual inspection and air sampling results are obtained from the PQPand NC work may proceed at the discretion of the Contracting Officer.

3.2.2 Precleaning

Wet wipe and HEPA vacuum all surfaces potentially contaminated with asbestos prior to establishment of an enclosure.

3.2.3 Asbestos Control Area Requirements

3.2.3.1 Negative Pressure Enclosure

Block and seal openings in areas where the release of airborne asbestos fibers can be expected. Establish an asbestos negative pressure enclosure with the use of curtains, portable partitions, or other enclosures in order to prevent the escape of asbestos fibers from the contaminated asbestos work area. Negative pressure enclosure development shall include protective covering of uncontaminated walls, and ceilings with a continuous membrane of two layers of minimum 6-mil plastic sheet sealed with tape to prevent water or other damage. Provide two layers of 6-mil plastic sheet over floors and extend a minimum of 12 inches up walls. Seal all joints with tape. Provide local exhaust system in the asbestos control area. Openings will be allowed in enclosures of asbestos control areas for personnel and equipment entry and exit, the supply and exhaust of air for the local exhaust system and the removal of properly containerized asbestos containing materials. Replace local exhaust system filters as required to maintain the efficiency of the system.

3.2.4 Removal Procedures

Wet asbestos material with a fine spray of amended water during removal, cutting, or other handling so as to reduce the emission of airborne fibers. Remove material and immediately place in 6 mil plastic disposal bags. Remove asbestos containing material in a gradual manner, with continuous application of the amended water or wetting agent in such a manner that no asbestos material is disturbed prior to being adequately wetted. Where unusual circumstances prohibit the use of 6 mil plastic bags, submit an alternate proposal for containment of asbestos fibers to the Contracting Officer for approval. For example, in the case where both piping and insulation are to be removed, the Contractor may elect to wet the insulation, wrap the pipes and insulation in plastic and remove the pipe by sections. Asbestos containing material shall be containerized while wet. At no time shall asbestos material be allowed to accumulate or become dry. Lower and otherwise handle asbestos containing material as indicated in 40 CFR 61-SUBPART M.

3.2.4.1 Sealing Contaminated Items Designated for Disposal

Remove contaminated architectural, mechanical, and electrical appurtenances such as venetian blinds, full-height partitions, carpeting, duct work, pipes and fittings, radiators, light fixtures, conduit, panels, and other contaminated items designated for removal by completely coating the items with an asbestos lock-down encapsulant at the demolition site before removing the items from the asbestos control area. These items need not be vacuumed. The asbestos lock-down encapsulant shall be tinted a contrasting color. It shall be spray-applied by airless method. Thoroughness of sealing operation shall be visually gauged by the extent of colored coating on exposed surfaces. Lock-down encapsulants shall comply with the performance requirements specified herein.

3.2.4.2 Exposed Pipe Insulation Edges

Contain edges of asbestos insulation to remain that are exposed by a removal operation. Wet and cut the rough ends true and square with sharp tools and then encapsulate the edges with a 1/4 inch thick layer of non-asbestos containing insulating cement troweled to a smooth hard finish. When cement is dry, lag the end with a layer of non-asbestos

lagging cloth, overlapping the existing ends by at least 4 inches. When insulating cement and cloth is an impractical method of sealing a raw edge of asbestos, take appropriate steps to seal the raw edges as approved by the Contracting Officer.

3.2.5 Air Sampling

Sampling of airborne concentrations of asbestos fibers shall be performed in accordance with 29 CFR 1926.1101 and as specified herein. Sampling performed in accordance with 29 CFR 1926.1101 shall be performed by the PQP. Unless otherwise specified, use NIOSH Method 7400 for sampling and analysis. Monitoring may be duplicated by the Government at the discretion of the Contracting Officer. If the air sampling results obtained by the Government differ from those results obtained by the Contractor, the Government will determine which results predominate.

3.2.5.1 Sampling Prior to Asbestos Work

Provide area air sampling and establish the baseline one day prior to the masking and sealing operations for each removal site. Establish the background by performing area sampling in similar but uncontaminated sites in the building.

3.2.5.2 Sampling During Asbestos Work

The PQP shall provide personal and area sampling as indicated in 29 CFR 1926.1101 and governing environmental regulations. In addition, provided the same type of work is being performed, provide area sampling at least once every work shift close to the work inside the enclosure, outside the clean room entrance to the enclosure, and at the exhaust opening of the local exhaust system. If sampling outside the enclosure shows airborne levels have exceeded background or 0.01 fibers per cubic centimeter, whichever is greater, stop all work, correct the condition(s) causing the increase, and notify the Contracting Officer immediately.

The PQP shall provide personal sampling as indicated in 29 CFR 1926.1101. At the same time the NC will provide area sampling close to the work inside the enclosure, outside the clean room entrance to the enclosure, and at the exhaust opening of the local exhaust system. In addition, provided the same type of work is being performed, the NC will provide area sampling once every work shift close to the work inside the enclosure, outside the clean room entrance to the enclosure, and at the exhaust opening of the local exhaust system. If sampling outside the enclosure shows airborne levels have exceeded background or 0.01 fibers per cubic centimeter, whichever is greater, stop all work, correct the condition(s) causing the increase, and notify the Contracting Officer immediately.

3.2.5.3 Sampling After Final Clean-Up (Clearance Sampling)

Provide area sampling of asbestos fibers using aggressive air sampling techniques as defined in the EPA 560/5-85-024 and establish an airborne asbestos concentration of less than 0.01 fibers per cubic centimeter after final clean-up but before removal of the enclosure or the asbestos work control area. After final cleanup and the asbestos control area is dry but prior to clearance sampling, the PQP and NC shall perform a visual inspection in accordance with ASTM E1368 to ensure that the asbestos control and work area is free of any accumulations of dirt, dust, or debris. Prepare a written report signed and dated by the PQP documenting

that the asbestos control area is free of dust, dirt, and debris and all waste has been removed. The asbestos fiber counts from these samples shall be less than 0.01 fibers per cubic centimeter or be not greater than the background, whichever is greater. Should any of the final samples indicate a higher value, the Contractor shall take appropriate actions to re-clean the area and shall repeat the sampling and analysis at the Contractor's expense.

3.2.6 Lock-Down

Prior to removal of plastic barriers and after pre-clearance clean up of gross contamination, the PQP shall conduct a visual inspection of all areas affected by the removal in accordance with ASTM E1368. Inspect for any visible fibers

3.2.7 Site Inspection

While performing asbestos engineering control work, the Contractor shall be subject to on-site inspection by the Contracting Officer who may be assisted by or represented by safety or industrial hygiene personnel. If the work is found to be in violation of this specification, the Contracting Officer or his representative will issue a stop work order to be in effect immediately and until the violation is resolved. All related costs including standby time required to resolve the violation shall be at the Contractor's expense.

3.3 CLEAN-UP AND DISPOSAL

3.3.1 Housekeeping

Essential parts of asbestos dust control are housekeeping and clean-up procedures. Maintain surfaces of the asbestos control area free of accumulations of asbestos fibers. Give meticulous attention to restricting the spread of dust and debris; keep waste from being distributed over the general area. Use HEPA filtered vacuum cleaners. DO NOT BLOW DOWN THE SPACE WITH COMPRESSED AIR. When asbestos removal is complete, all asbestos waste is removed from the work-site, and final clean-up is completed, the Contracting Officer will attest that the area is safe before the signs can be removed. After final clean-up and acceptable airborne concentrations are attained but before the HEPA unit is turned off and the enclosure removed, remove all pre-filters on the building HVAC system and provide new pre-filters. Dispose of filters as asbestos contaminated materials. Reestablish HVAC mechanical, and electrical systems in proper working order. The Contracting Officer will visually inspect all surfaces within the enclosure for residual material or accumulated dust or debris. The Contractor shall re-clean all areas showing dust or residual materials. If re-cleaning is required, air sample and establish an acceptable asbestos airborne concentration after re-cleaning. The Contracting Officer must agree that the area is safe in writing before unrestricted entry will be permitted. The Government shall have the option to perform monitoring to determine if the areas are safe before entry is permitted.

3.3.2 Title to Materials

All waste materials, except as specified otherwise, shall become the property of the Contractor and shall be disposed of as specified in applicable local, State, and Federal regulations and herein.

3.3.3 Disposal of Asbestos

3.3.3.1 Procedure for Disposal

Collect asbestos waste, asbestos contaminated water, scrap, debris, bags, containers, equipment, and asbestos contaminated clothing which may produce airborne concentrations of asbestos fibers and place in sealed fiber-proof, waterproof, non-returnable containers (e.g. double plastic bags 6 mils thick, cartons, drums or cans). Wastes within the containers must be adequately wet in accordance with 40 CFR 61-SUBPART M. Affix a warning and Department of Transportation (DOT) label to each container including the bags or use at least 6 mils thick bags with the approved warnings and DOT labeling preprinted on the bag. The name of the waste generator and the location at which the waste was generated shall be clearly indicated on the outside of each container. Prevent contamination of the transport vehicle (especially if the transport vehicle is a rented truck likely to be used in the future for non-asbestos purposes). These precautions include lining the vehicle cargo area with plastic sheeting (similar to work area enclosure) and thorough cleaning of the cargo area after transport and unloading of asbestos debris is complete. Dispose of waste asbestos material at an Environmental Protection Agency (EPA) or State-approved asbestos landfill off Government property. For temporary storage, store sealed impermeable bags in asbestos waste drums or skids. An area for interim storage of asbestos waste-containing drums or skids will be assigned by the Contracting Officer or his authorized representative. Procedure for hauling and disposal shall comply with 40 CFR 61-SUBPART M, State, regional, and local standards. Sealed plastic bags may be dumped from drums into the burial site unless the bags have been broken or damaged. Damaged bags shall remain in the drum and the entire contaminated drum shall be buried. Uncontaminated drums may be recycled. Workers unloading the sealed drums shall wear appropriate respirators and personal protective equipment when handling asbestos materials at the disposal site.

3.3.3.2 Asbestos Disposal Quantity Report

Direct the PQP to record and report, to the Contracting Officer, the amount of asbestos containing material removed and released for disposal. Deliver the report for the previous day at the beginning of each day shift with amounts of material removed during the previous day reported in linear feet or square feet as described initially in this specification and in cubic feet for the amount of asbestos containing material released for disposal.

Allow the NC to inspect, record and report the amount of asbestos containing material removed and released for disposal on a daily basis.

-- End of Section --

Global Consulting, Inc.

1818 New York Avenue, N.E.
Washington, DC 20002

Telephone: (202) 832-1433
Fax: (202) 832-1434

May 13, 2016

Michelle Holland, PE
JACOBS
Project Manager
1100 N. Glebe Rd. Suite 500
Arlington, VA 22201

RE: Hazardous Materials Survey
Contract No.: N40080-11-D-0491
Marine Corps Air Station Cherry Point
Building 133 Boiler Upgrades
Global Project No.: W052

Dear Ms. Holland:

Global Consulting, Inc. (Global) is pleased to submit this report for the above-referenced site. Global conducted a limited hazardous materials survey of the site from April 28 through April 29, 2016. The results of the survey are presented in the attached report. An evaluation of the coal feed and ash processing system, conducted at the same time, will be submitted under separate cover at a later date.

Should you have any questions concerning this proposal, please do not hesitate to contact us at (202) 832-1433.

Sincerely,

Patrick Rush
Industrial Hygienist

Judi Darnell
Program Manager

Delivery ORDER NO.

PRIME CONTRACT:
N40080-11-D-0491

HAZMAT Survey

Marine Corps Air Station
Building 152
Cherry Point, NC

PREPARED FOR:

JACOBS

1100 N Glebe Road, Suite 500
Arlington, VA 22201

REPORT PREPARED BY:

Global Consulting, Inc.

GLOBAL CONSULTING, INC
1818 NEW YORK AVENUE, NE, Suite 111
WASHINGTON, D.C. 20002

May 13, 2016
Revised: May 16, 2016

Table of Contents

1.0 Executive Summary 2
2.0 Acronyms 3
3.0 Introduction 4
4.0 Asbestos Inspection Report 5
4.1 Survey Methodology 5
4.1.1 Laboratory Analysis 6
4.1.2 Inaccessible Areas and Limited Access 6
4.2 Asbestos Survey Results 7
4.3 Asbestos Conclusions 9
5.0 Lead-Based Paint (LBP) Survey 10
5.1 LBP Survey Methodology 10
5.2 LBP Survey Results 10
6.0 Universal Wastes and Ozone-Depleting Substances 11
7.0 Polychlorinated Biphenyls (PCBs) 11
8.0 Conclusions 11

Appendix 1: Laboratory Data

Appendix 2: Sample Location Drawings

Appendix 3: Photo log

Appendix 4: Inspector Licensure

1.0 Executive Summary

Jacobs Engineering (Jacobs) retained Global Consulting, Inc. (Global) to perform Hazardous Material (HAZMAT) Inspection Services in support of the Renovation of Building 152 (referred to as the "Facility") at the Marine Corps Air Station in Cherry Point, North Carolina. The project's overall focus is to convert Boilers 1 and 2 to operate on natural gas and fuel oil and transition from the use of coal. This report documents the inspection and sampling of the areas that may be disturbed during the planned renovations for hazardous materials including Asbestos-Containing Material (ACM), Lead-Based Paint (LBP), Universal Wastes, Ozone-Depleting Substances, and Polychlorinated Biphenyls (PCBs). The site survey also included an evaluation of the coal feed and ash processing system. The report includes abatement specifications, where warranted.

Asbestos:
GLOBAL's North Carolina-licensed, EPA-accredited Asbestos Inspector assessed the Facility for the presence of suspect asbestos-containing materials (ACM). Of those materials sampled, asbestos was found in mudded elbows and joints, asphalt roofing, roof flashing, and tank end-cap insulation. Sampling results are presented in Section 4.2.

Lead-Based Paint:

During the same time period, Global's Industrial Hygienist (IH) assessed the Facility for the presence of materials that may contain Lead-Based Paint (LBP).

By paint-chip analysis, the following component was determined to contain LBP:

- The grey steel support beams and columns

The LBP materials appeared be in good condition, and can be managed in place. Sampling results are presented in Section 5.2.

Universal Wastes and Ozone-Depleting Substances:

Many potentially mercury-containing light bulbs were identified. All bulbs were in use. Disposal and management of such bulbs is regulated by the Recreation Conservation and Recovery Act (RCRA) Universal Waste Rule (UWR), and the bulbs should be handed in accordance with this rule. If renovations to the Facility involve removal of refrigerants, these refrigerants need to be recycled in accordance with Section 608 of the Clean Air Act of 1990, and should only be handled by certified technicians.

Polychlorinated Biphenyls (PCBs):

Polychlorinated Biphenyl (PCB)-containing light ballasts were not noted during the survey.

2.0 Acronyms

ACM	Asbestos-Containing Material
AHERA	Asbestos Hazard Emergency Response Act
EPA	Environmental Protection Agency
f/cc	Fibers per cubic centimeters of air
FT	Floor Tile
HEPA	High Efficiency Particulate Air
IH	Industrial Hygienist
LBP	Lead-Based Paint
M	Mastic (flooring)
NIOSH	National Institute of Occupational Safety and Health
NESHAP	National Emission Standards for Hazardous Air Pollution
OSHA	Occupational Safety & Health Administration
PCM	Phase Contrast Microscopy
PI	Pipe Insulation
PLM	Polarized Light Microscopy
RACM	Regulated Asbestos-containing Material
RCRA	Recreation Conservation and Recovery Act (RCRA)
SDS	Safety Data Sheet
TEM	Transmission Electron Microscopy
TSI	Thermal System Insulation
UW	Universal Waste

3.0 Introduction

Jacobs Engineering (Jacobs) retained Global Consulting, Inc. (Global) to perform Hazardous Material (HAZMAT) Inspection Services in support of the Renovation of Building 152 at the Marine Corps Air Station in Cherry Point, North Carolina. The project's overall focus is to convert Boilers 1 and 2 from coal power to natural gas. This report documents the inspection and sampling of the areas that may be disturbed during the planned renovations for hazardous materials including Asbestos-Containing Material (ACM), Lead-Based Paint (LBP), Universal Wastes and Ozone-Depleting Substances, and Polychlorinated Biphenyls (PCBs). Where indicated, abatement specifications to address remediation methods will be developed.

The Facility was surveyed for the presence of hazardous building materials on April 28 and 29, 2016. The survey was limited to areas that will be affected in the planned upgrades to Boilers 1 and 2. This report should in no way be used to represent a comprehensive HAZMAT for the Facility. Detailed findings of the survey are presented in Sections 4.0 through 7.0.

4.0 Asbestos Inspection Report

All areas of the Facility planned to be affected by Project #P224 were surveyed for the presence of potential ACM. The results of this survey are presented in Section 4.2, Asbestos Survey Results. This survey was conducted by Mr. Patrick Rush, a North Carolina-Licensed Asbestos Inspector. His credentials are presented in Appendix 4.

4.1 Survey Methodology

The ACM survey was divided into three distinct phases: pre-survey planning, survey for ACM, and development of ACM response action recommendation. The surveys were limited to confirming the presence of ACM that would be impacted by the renovation. Pre-survey planning consisted of reviewing the readily available history (both construction and utilization) of the building, planning a survey strategy, and scheduling survey work. Jacobs provided Global with information regarding the history and planned use of the property.

The inspection was conducted on an area-by-area basis as determined in the planning phase. Global's Asbestos Inspector identified materials considered to be suspect ACM according to AHERA protocols, unless otherwise specified. While AHERA is not required for this Facility, it is considered the most stringent standard.

As defined by AHERA, suspect ACM included the following building material categories:

- **Surfacing materials** - including spray-applied or troweled-on wall/ceiling coatings
- **Thermal System Insulation (TSI)** - including pipe insulation, boiler lagging, tank insulation, and duct insulation
- **Miscellaneous materials** - including ceiling tiles, floor tiles/mastic, gaskets (if accessible), fire doors, wallboard/spackle

Suspect materials that were homogeneous in nature (i.e., uniform in color and texture) were identified, touched to determine friability, and, if indicated, were sampled by removing a bulk sample. This bulk sample was placed into a labeled container, and the sample location was patched and repaired. One or more samples were collected from each homogeneous material, if deemed safe to do so by the inspector. Samples were collected in a randomly distributed manner in accordance with AHERA provisions (40 CFR 763.86). The description, location, condition, and quantity of each homogeneous material were recorded in the inspector's log.

Extreme care was taken to avoid potential fiber release during the inspection/sampling process. Before sample collection, a fine mist of water was applied to the sample site. Samples were collected using sharpened core samplers and/or razor knives, where necessary, and were immediately placed in labeled containers and sealed. Any dust generated was wet wiped, and/or a dust suppressant was applied to minimize the potential for fiber release.

4.1.1 Laboratory Analysis

The samples of suspect ACMs were packaged and delivered, under strict chain-of-custody procedures, to EMSL Analytical, Inc., a National Voluntary Laboratory Accreditation Program (NVLAP) accredited-laboratory, of Beltsville, Maryland.

Quantification of asbestos content in bulk samples was performed via EPA 600/R-93/116 Method using Polarized Light Microscopy (PLM). Per OSHA, any material containing greater than 1% asbestos by weight is considered to be an ACM. Personnel performing analyses have been trained in identifying asbestos by the McCrone Research Institute and participate in national accreditation programs. Laboratory data sheets indicating the sample designations, gross descriptions, and analytical results are presented in Appendix 1.

4.1.2 Inaccessible Areas and Limited Access

All areas of the building were made accessible for this survey. The roof was accessible, but penetrations to the membrane were not made because the intrusive nature of the sampling has the potential to compromise the roof waterproofing system.

Every reasonable attempt was made to locate ACM present, and to identify ACM as TSI, surfacing material, or other miscellaneous materials in the areas surveyed. Inaccessible areas could be addressed only through extrapolation of conditions in accessible building spaces and review of building plans, specifications, or other building documents provided to Global. Areas that were inaccessible, or where the survey was limited to visual observation only, are identified on building drawings and/or in report narrative. Such inaccessible areas might include, but are not limited to the those listed in Table 1: Description of Inaccessible Locations.

Table 1: Description of Inaccessible Locations

Within walls	Within fire doors
Enclosed pipe/duct chases	Inside mechanical equipment/ductwork
Above solid ceilings	Inside boiler breaching walls

Limited access areas (i.e. beneath fixed walls, under wall-to-wall carpeting, or above fixed ceilings with small access hatches) were investigated as feasible, and, as a result, conclusions regarding the presence or absence of asbestos might be of limited accuracy.

4.1.3 Survey Limitations

All other suspect materials uncovered during renovation/demolition activities, not identified within this report, should be assumed to be asbestos-containing until future bulk sampling confirms otherwise.

GLOBAL does not take responsibility for any missing and/or incomplete data, and/or reports that were not provided prior to and/or during this survey.

4.2 Asbestos Survey Results

A total of 56 samples were collected from 27 homogeneous areas. Of the materials sampled, five were determined to contain asbestos greater than 1% by weight, and according to OSHA, the materials are therefore considered ACM. An additional two materials, boiler breaching insulation and fire brick in the stairwell, were assumed positive. Sample locations, material descriptions, conditions, and analytical results are given in Table 2. Drawings are presented in Appendix 2.

Table 2 – Asbestos Sampling Results – MCAS Building 152

Homogeneous Area Description	Location	Condition	Sample Numbers	Percent Asbestos Detected
Insulation of boiler doors	Ground floor, boilers 1&2	Good	MCASB152-B/4 MCASB152-B/5 MCASB152-B/6	None detected
Interior boiler insulation	Interior of boilers 1&2	Good	MCASB152-B/7 MCASB152-B/8 MCASB152-B/9	None detected
Fire brick	Ground floor	Good	MCASB152-B/10 MCASB152-B/11 MCASB152-B/12	None detected
Boiler door gaskets	Doors of boilers 1&2	Good	MCASB152-B/13	None detected
Tank end-cap insulation	Main boiler tanks of boilers 1&2	Good	MCASB152-B/14 MCASB152-B/15 MCASB152-B/16	None detected
Mudded fittings and elbows on LPS lines	Low pressure steam lines	Good	MCASB152-B/17 MCASB152-B/52 MCASB152-B/53	**10% Chrysotile**
Mudded fittings and elbows on HPS lines	High pressure steam lines	Good	MCASB152-B/18 MCASB152-B/19 MCASB152-B/34	**10% Chrysotile**
Hard white pipe insulation on HPS lines	Under metal jackets on high pressure steam lines	Good	MCASB152-B/21 MCASB152-B/57 MCASB152-B/58	None detected
Hard white pipe insulation on LPS	Under metal jackets on low pressure steam lines	Good	MCASB152-B/54 MCASB152-B/55 MCASB152-B/56	None detected

Table 2 – Asbestos Sampling Results – MCAS Building 152

Homogeneous Area Description	Location	Condition	Sample Numbers	Percent Asbestos Detected
Boiler breaching insulation	Under metal on breaching to boilers 1&2	Good	N/A	**Not sampled, assume positive**
Insulation on flash tank	50' level catwalk	Good	MCASB152-B/35 MCASB152-B/36 MCASB152-B/37	None detected
Hard white pipe insulation on treated water lines	Treated water lines	Good	MCASB152-B/28 MCASB152-B/29 MCASB152-B/30	None detected
Mudded elbows and fittings on treated water lines	Treated water lines	Good	MCASB152-B/31 MCASB152-B/32 MCASB152-B/33	None detected
End cap insulation on 68' level tanks	Large and small tanks on 68' level catwalk	Good	MCASB152-B/22 MCASB152-B/23 MCASB152-B/24	**5% Chrysotile**
Hard white insulation on main section of 68' level tanks	Large and small tank on 68' level catwalk	Good	MCASB152-B/25 MCASB152-B/26 MCASB152-B/27	None detected
Insulation on ex. boiler ID fan	Ex. boiler ID fan	Good	MCASB152-B/43 MCASB152-B/44 MCASB152-B/45	None detected
Fire brick	Top of stairs to coal dispensing room	Good	Inaccessible	**Not sampled, assume positive**
Gasket on ash hopper door	Basement ash hopper	Good	MCASB152-B/42	None detected
Duplex strainer insulation	Sub-basement	Good	MCASB152-B/39 MCASB152-B/40 MCASB152-B/41	None detected
Asphalt roof on ash silo	Ash silo roof	Good	MCASB152-B/1	**30% Chrysotile**
Roof flashing on ash silo	Ash silo roof	Good	MCASB152-B/2	**35% Chrysotile**
Roof tar on ash silo	Ash silo roof	Good	MCASB152-B/3	None detected
Asphalt sheet roofing	Main roof	Good	MCASB152-B/38	None detected
Hard white insulation on Ex. Boiler No.1 & No. 2	Ex. Boiler No.1 & No. 2	Good	MCASB152-B/46 MCASB152-B/47 MCASB152-B/48	None detected
Asphalt roof on precipitator roof	Precipitator roof	Good	MCASB152-B/49	None detected
Gasket on precipitator exhaust	Precipitator control room	Good	MCASB152-B/50	None detected
Roof Flashing	Main roof	Good	MCASB152-B/51	None detected

4.3 Asbestos Conclusions

A total of 27 materials considered to be potential ACM were sampled. Five materials contained asbestos concentrations greater than 1% asbestos, by weight, and are, therefore, considered ACM by OSHA. Two additional materials, fire brick (in the stairwell adjacent to the coal dispensing room) and boiler breaching insulation, were not accessible and were, therefore, not sampled. These two materials should be assumed positive, unless future analysis deems otherwise.

The materials found to have greater than 1% asbestos content, are additionally considered to be regulated asbestos-containing materials (RACM) according to the EPA. RACM is defined as friable asbestos material or non-friable asbestos-containing material (ACM) that will be, or has been, subjected to sanding, grinding, cutting, or abrading or has crumbled, pulverized, or reduced to powder in the course of demolition or renovation operations.

These materials have been identified as asbestos-containing materials, and wherever these materials are found, they shall be removed in accordance with abatement specifications. All quantities must be field-verified by a licensed asbestos abatement contractor(s) prior to demolition or renovation. Sample locations are presented in Appendix 2. (Please note: the two assumed to be ACM materials, fire brick and boiler breeching insulation, are not noted in the drawings.)

Those materials sampled, but containing less than 1% asbestos, by weight, are not considered ACM. Safety and health procedures normally employed during construction activity may be used for the removal, demolition, and disposal of these materials.

5.0 Lead-Based Paint (LBP) Survey

Areas of the Facility planned to be affected by project number P224 were made accessible for lead-based paint (LBP) testing. The results of testing are presented in Section 5.2 of this report. This survey was conducted by Mr. Patrick Rush.

5.1 LBP Survey Methodology

Painted surfaces were tested for the presence of LBP by the collection of paint chip samples. All layers of paint, down to, but not including the substrate, were scraped off and placed into individually-labeled containers. The area was then wiped clean to ensure that any loose, potential LBP was thoroughly removed. The samples were delivered under strict chain of custody procedures to EMSL Laboratories in Beltsville, Maryland, a member of the National Voluntary Laboratory Accreditation Program (NVLAP). Samples were submitted for Flame Atomic Absorption Spectroscopy (AAS) EPA method number SW 846 3050B analysis. Laboratory data sheets, indicating the analytical and method and results are included in Appendix 1.

5.2 LBP Survey Results

A total of seven samples were collected from seven separate components. Of those, one sample exceeded the North Carolina Lead Based Paint standard of 0.5% lead by weight. The sample in exceedance was grey paint collected from the steel support beams and columns found through the facility. Facility personnel should be appraised the presence of lead in the materials. Full descriptions of the components sampled are listed in Table 3.

Table 3 – LBP Sampling Results – MCAS Building 152

Component	Color	Condition	Location	Sample Number	Percent Lead By Weight
Metal handrails and stairs	Yellow	Intact	Throughout	MCASB152-L/1	0.034
Concrete walls	Grey	Intact	Throughout	MCASB152-L/2	0.058
Duplex Strainer	Blue	Intact	Sub-Basement	MCASB152-L/3	<0.010
Steel support beams and columns	Grey	Intact	Throughout	MCASB152-L/4	2.0
Basement ash hoppers	Silver	Intact	Basement	MCASB152-L/5	<0.047
Coal conveyer belt	White	Intact	Outdoors	MCASB152-L/6	0.014
Precipitator	Black	Intact	Exterior	MCASB152-L/7	<0.010

6.0 Universal Wastes and Ozone-Depleting Substances

The following two universal waste products and pollutants were identified during the survey: potentially mercury-containing light bulbs and refrigerants.

A large quantity of mercury-containing light bulbs were identified during the survey. Disposal and management of such bulbs is regulated by the Recreation Conservation and Recovery Act (RCRA) Universal Waste Rule (UWR), and should be handled in accordance with this rule.

If renovations to the Facility involve removal of air conditioning units, the refrigerants need to be recycled in accordance with Section 608 of the Clean Air Act of 1990, and should only be handled by certified technicians.

7.0 Polychlorinated Biphenyls (PCBs)

Polychlorinated Biphenyl (PCB)-containing light ballasts were not identified.

8.0 Conclusions

The survey found a limited amount of hazardous material that will be disturbed during the planned renovation. ACM was identified in seven homogenous materials, all of which appeared to be in good condition. ACM should be abated in accordance with local, state, and Federal regulations prior to renovations to the boilers. LBP was identified on one substrate, which was found to be in good condition. Global does not recommend performing abatement on the LBP that was identified. If the substrates identified as containing LBP are to be removed during renovation, they should be removed intact, and recycled at a certified facility. Facility personnel should be appraised the presence of lead in the materials. Mercury lighting systems should be managed in place. If removed or upgraded, the bulbs should be recycled in accordance with the RCRA universal waste requirements. If renovations to the Facility involve removal of the air conditioning units, the refrigerants need to be recycled in accordance with Section 608 of the Clean Air Act of 1990, and should only be handled by certified technicians.

Appendix 1:

Laboratory Data

EMSL Analytical, Inc.

10768 Baltimore Avenue Beltsville, MD 20705
Tel/Fax: (301) 937-5700 / (301) 937-5701
http://www.EMSL.com / beltsvillelab@emsl.com

EMSL Order: 191604587
Customer ID: GLOC62
Customer PO:
Project ID:

Attention: Patrick Rush
Global Consulting, Inc.
1818 New York Avenue N.E.
Suite 107
Washington, DC 20002
Project: W052/ JACOBS MCAS B152

Phone: (703) 851-8384
Fax: (202) 832-1434
Received Date: 05/03/2016 12:20 PM
Analysis Date: 05/03/2016
Collected Date: 04/28/2016

Test Report: Asbestos Analysis of Bulk Materials via EPA 600/R-93/116 Method using Polarized Light Microscopy

			Non-Asbestos		Asbestos
Sample	**Description**	**Appearance**	**% Fibrous**	**% Non-Fibrous**	**% Type**
MCASB152-B/1 *191604587-0001*	ASPHALT ROOFING ON ASH SILO	Brown/Gray/Black Fibrous Homogeneous		70% Non-fibrous (Other)	30% Chrysotile
MCASB152-B/2 *191604587-0002*	ROOF FLASHING ON ASH SILO	Gray/White/Black Fibrous Homogeneous		65% Non-fibrous (Other)	35% Chrysotile
MCASB152-B/3 *191604587-0003*	ROOF TAR ON ASH SILO	Brown/Gray/Black Non-Fibrous Homogeneous		5% Quartz 95% Non-fibrous (Other)	None Detected
MCASB152-B/4 *191604587-0004*	INSULATION ON BOILER DOORS	Gray/Red/Black Non-Fibrous Homogeneous		60% Quartz 40% Non-fibrous (Other)	None Detected
MCASB152-B/5 *191604587-0005*	INSULATION ON BOILER DOORS	Gray/Red/Black Non-Fibrous Homogeneous		60% Quartz 40% Non-fibrous (Other)	None Detected
MCASB152-B/6 *191604587-0006*	INSULATION ON BOILER DOORS	Gray/Tan/Red Non-Fibrous Homogeneous		55% Quartz 45% Non-fibrous (Other)	None Detected
MCASB152-B/7 *191604587-0007*	INT. BOILER INSULATION	Gray/White/Red Non-Fibrous Homogeneous		55% Quartz 45% Non-fibrous (Other)	None Detected
MCASB152-B/8 *191604587-0008*	INT. BOILER INSULATION	Gray/White/Red Non-Fibrous Homogeneous		65% Quartz 35% Non-fibrous (Other)	None Detected
MCASB152-B/9 *191604587-0009*	INT. BOILER INSULATION	Gray/Red/Black Non-Fibrous Heterogeneous		40% Quartz 60% Non-fibrous (Other)	None Detected
MCASB152-B/10 *191604587-0010*	FIRE BRICK	Gray/Tan/Red Non-Fibrous Homogeneous		55% Quartz 45% Non-fibrous (Other)	None Detected
MCASB152-B/11 *191604587-0011*	FIRE BRICK	Gray/Tan/Red Non-Fibrous Homogeneous		50% Quartz 50% Non-fibrous (Other)	None Detected
MCASB152-B/12 *191604587-0012*	FIRE BRICK	Gray/Tan/Red Non-Fibrous Homogeneous		60% Quartz 40% Non-fibrous (Other)	None Detected
MCASB152-B/13 *191604587-0013*	GASKETS ON BOILER DOORS	Gray/White/Rust Fibrous Homogeneous	85% Glass	15% Non-fibrous (Other)	None Detected
MCASB152-B/14 *191604587-0014*	TANK END-CAP INS. ON 1 & 2 BOILERS	Gray/White/Blue Non-Fibrous Homogeneous		15% Ca Carbonate 85% Perlite	None Detected
MCASB152-B/15 *191604587-0015*	TANK END-CAP INS. ON 1 & 2 BOILERS	Brown/Gray/White Fibrous Homogeneous	35% Cellulose 20% Min. Wool	45% Ca Carbonate	None Detected
MCASB152-B/16 *191604587-0016*	TANK END-CAP INS. ON 1 & 2 BOILERS	Brown/Gray Fibrous Homogeneous	35% Cellulose 25% Min. Wool	40% Ca Carbonate	None Detected

Initial report from: 05/05/2016 11:55:29

EMSL Analytical, Inc.
10768 Baltimore Avenue Beltsville, MD 20705
Tel/Fax: (301) 937-5700 / (301) 937-5701
http://www.EMSL.com / beltsvillelab@emsl.com

EMSL Order: 191604587
Customer ID: GLOC62
Customer PO:
Project ID:

Test Report: Asbestos Analysis of Bulk Materials via EPA 600/R-93/116 Method using Polarized Light Microscopy

			Non-Asbestos		Asbestos
Sample	**Description**	**Appearance**	**% Fibrous**	**% Non-Fibrous**	**% Type**
MCASB152-B/17 *191604587-0017*	LPS MUDDED ELBOWS	Brown/Gray/White Fibrous Homogeneous	25% Cellulose 15% Min. Wool	60% Ca Carbonate	None Detected
MCASB152-B/18-Outer Coating *191604587-0018*	HPS MUDDED ELBOWS	White/Silver Fibrous Homogeneous	30% Glass	63% Non-fibrous (Other)	7% Chrysotile
MCASB152-B/18-Mudded Elbow Insulation *191604587-0018A*	HPS MUDDED ELBOWS	Brown/Gray/White Fibrous Homogeneous	35% Cellulose 12% Min. Wool	53% Ca Carbonate	None Detected
MCASB152-B/19-Outer Coating *191604587-0019*	HPS MUDDED ELBOWS	Gray/White Fibrous Homogeneous	25% Glass	65% Non-fibrous (Other)	10% Chrysotile
MCASB152-B/19-Mudded Elbow Insulation *191604587-0019A*	HPS MUDDED ELBOWS	Brown/Gray/White Fibrous Homogeneous	25% Cellulose 30% Min. Wool	45% Ca Carbonate	None Detected
MCASB152-B/21 *191604587-0020*	HARD WHT. PI ON HPS LINES	Gray/White Fibrous Homogeneous	30% Synthetic	70% Ca Carbonate	None Detected
MCASB152-B/22-Outer Coating *191604587-0021*	END CAP INS. ON TANKS ON 68' LEVEL	Gray/White Fibrous Homogeneous	15% Glass	80% Non-fibrous (Other)	5% Chrysotile
MCASB152-B/22-End Cap Insulation *191604587-0021A*	END CAP INS. ON TANKS ON 68' LEVEL	Brown/Gray/White Fibrous Homogeneous	35% Cellulose 25% Min. Wool	40% Ca Carbonate	None Detected
MCASB152-B/23 *191604587-0022*	END CAP INS. ON TANKS ON 68' LEVEL	White Non-Fibrous Homogeneous		100% Ca Carbonate	None Detected
MCASB152-B/24 *191604587-0023*	END CAP INS. ON TANKS ON 68' LEVEL	Gray/White/Rust Non-Fibrous Homogeneous		100% Ca Carbonate	None Detected
MCASB152-B/25 *191604587-0024*	INSULATION ON TANKS ON 68' LEVEL	Gray/White Fibrous Homogeneous	40% Min. Wool	60% Ca Carbonate	None Detected
MCASB152-B/26 *191604587-0025*	INSULATION ON TANKS ON 68' LEVEL	Gray/White Fibrous Homogeneous	40% Min. Wool	60% Ca Carbonate	None Detected
MCASB152-B/27 *191604587-0026*	INSULATION ON TANKS ON 68' LEVEL	Gray/White Fibrous Homogeneous	45% Min. Wool	55% Ca Carbonate	None Detected
MCASB152-B/28 *191604587-0027*	PI ON TREATED WATER LINES	Brown/White Fibrous Homogeneous	40% Cellulose	60% Ca Carbonate	None Detected
MCASB152-B/29 *191604587-0028*	PI ON TREATED WATER LINES	Brown/White Fibrous Homogeneous	35% Cellulose 12% Glass	53% Ca Carbonate	None Detected
MCASB152-B/30 *191604587-0029*	PI ON TREATED WATER LINES	Brown/White Fibrous Homogeneous	40% Cellulose	60% Ca Carbonate	None Detected
MCASB152-B/31 *191604587-0030*	TREATED WATER LINES MUDDED ELBOWS	Brown/Gray/White Fibrous Homogeneous	40% Cellulose 15% Min. Wool	45% Ca Carbonate	None Detected

Initial report from: 05/05/2016 11:55:29

EMSL Analytical, Inc.
10768 Baltimore Avenue Beltsville, MD 20705
Tel/Fax: (301) 937-5700 / (301) 937-5701
http://www.EMSL.com / beltsvillelab@emsl.com

EMSL Order: 191604587
Customer ID: GLOC62
Customer PO:
Project ID:

Test Report: Asbestos Analysis of Bulk Materials via EPA 600/R-93/116 Method using Polarized Light Microscopy

			Non-Asbestos		Asbestos
Sample	**Description**	**Appearance**	**% Fibrous**	**% Non-Fibrous**	**% Type**
MCASB152-B/32 *191604587-0031*	TREATED WATER LINES MUDDED ELBOWS	Brown/Gray/White Fibrous Homogeneous	35% Cellulose 25% Min. Wool	40% Ca Carbonate	None Detected
MCASB152-B/33-Outer Wrap/Coating *191604587-0032*	TREATED WATER LINES MUDDED ELBOWS	Gray/White Fibrous Homogeneous	5% Synthetic 25% Glass	65% Non-fibrous (Other)	5% Chrysotile
MCASB152-B/33-Mudded Elbow Insulation *191604587-0032A*	TREATED WATER LINES MUDDED ELBOWS	Brown/White Fibrous Homogeneous	35% Cellulose 10% Glass	55% Ca Carbonate	None Detected
MCASB152-B/34-Outer Coating *191604587-0033*	HPS MUDDED ELBOWS	Gray/White Fibrous Homogeneous	20% Glass	75% Non-fibrous (Other)	5% Chrysotile
MCASB152-B/34-Mudded Elbow Insulation *191604587-0033A*	HPS MUDDED ELBOWS	Gray/White Fibrous Homogeneous	20% Min. Wool	80% Ca Carbonate	None Detected
MCASB152-B/35 *191604587-0034*	INSULATION ON FLASH TANKS	Brown/Gray/White Fibrous Homogeneous	25% Cellulose 25% Min. Wool	50% Ca Carbonate	None Detected
MCASB152-B/36 *191604587-0035*	INSULATION ON FLASH TANKS	Gray/White Fibrous Homogeneous	35% Min. Wool	65% Ca Carbonate	None Detected
MCASB152-B/37 *191604587-0036*	INSULATION ON FLASH TANKS	Gray/White Fibrous Homogeneous	35% Min. Wool	65% Ca Carbonate	None Detected
MCASB152-B/38 *191604587-0037*	ASPHALT SHEET ROODING	Gray/Black Fibrous Homogeneous	35% Synthetic	30% Quartz 35% Non-fibrous (Other)	None Detected
MCASB152-B/39 *191604587-0038*	DUPLEX STRAINER INSULATION	Gray/White Fibrous Homogeneous	25% Synthetic	75% Ca Carbonate	None Detected
MCASB152-B/40 *191604587-0039*	DUPLEX STRAINER INSULATION	Gray/White Fibrous Homogeneous	35% Synthetic	65% Ca Carbonate	None Detected
MCASB152-B/41 *191604587-0040*	DUPLEX STRAINER INSULATION	Gray/White Fibrous Homogeneous	30% Synthetic	70% Ca Carbonate	None Detected
MCASB152-B/42 *191604587-0041*	GASKET ON BSMT. ASH HOPPERS	Gray/White/Yellow Fibrous Homogeneous	75% Glass	25% Ca Carbonate	None Detected
MCASB152-B/43-Outer Wrap *191604587-0042*	INSULATION ON EX. BOILER ID FAN	Gray/White Fibrous Homogeneous	35% Cellulose 15% Min. Wool	50% Non-fibrous (Other)	None Detected
MCASB152-B/43-Insulation *191604587-0042A*	INSULATION ON EX. BOILER ID FAN	Gray/White Fibrous Heterogeneous	25% Cellulose 35% Min. Wool	40% Ca Carbonate	None Detected
MCASB152-B/44-Outer Wrap *191604587-0043*	INSULATION ON EX. BOILER ID FAN	Gray/White Fibrous Homogeneous	45% Cellulose 20% Min. Wool	35% Non-fibrous (Other)	None Detected
MCASB152-B/44-Insulation *191604587-0043A*	INSULATION ON EX. BOILER ID FAN	Gray/White Fibrous Heterogeneous	25% Cellulose 35% Min. Wool	40% Ca Carbonate	None Detected

Initial report from: 05/05/2016 11:55:29

EMSL Analytical, Inc.
10768 Baltimore Avenue Beltsville, MD 20705
Tel/Fax: (301) 937-5700 / (301) 937-5701
http://www.EMSL.com / beltsvillelab@emsl.com

EMSL Order: 191604587
Customer ID: GLOC62
Customer PO:
Project ID:

Test Report: Asbestos Analysis of Bulk Materials via EPA 600/R-93/116 Method using Polarized Light Microscopy

			Non-Asbestos		Asbestos
Sample	**Description**	**Appearance**	**% Fibrous**	**% Non-Fibrous**	**% Type**
MCASB152-B/45-Outer Wrap *191604587-0044*	INSULATION ON EX. BOILER ID FAN	Gray/White Fibrous Homogeneous	45% Cellulose 15% Min. Wool	40% Non-fibrous (Other)	None Detected
MCASB152-B/45-Insulation *191604587-0044A*	INSULATION ON EX. BOILER ID FAN	Gray/White Fibrous Heterogeneous	15% Cellulose 45% Min. Wool	40% Ca Carbonate	None Detected
MCASB152-B/46 *191604587-0045*	EX. BOILER NO. 1 & NO. 2 INS.	Gray/White/Blue Non-Fibrous Homogeneous		12% Ca Carbonate 88% Perlite	None Detected
MCASB152-B/47 *191604587-0046*	EX. BOILER NO. 1 & NO. 2 INS.	Gray/White/Blue Non-Fibrous Homogeneous		90% Perlite 10% Non-fibrous (Other)	None Detected
MCASB152-B/48 *191604587-0047*	EX. BOILER NO. 1 & NO. 2 INS.	Gray/White/Blue Fibrous Homogeneous	20% Synthetic	70% Perlite 10% Non-fibrous (Other)	None Detected
MCASB152-B/49 *191604587-0048*	ASPHALT ROOF ON PERCIPITATOR	Gray/White/Green Non-Fibrous Heterogeneous		25% Ca Carbonate 75% Non-fibrous (Other)	None Detected
MCASB152-B/50 *191604587-0049*	GASKET ON PERCIPITATOR EXHAUST	Tan/White/Black Fibrous Heterogeneous	75% Glass	25% Non-fibrous (Other)	None Detected
MCASB152-B/51 *191604587-0050*	ROOF FLASHING ON MAIN ROOF	Brown/White/Black Fibrous Heterogeneous	7% Synthetic	25% Quartz 68% Non-fibrous (Other)	None Detected
MCASB152-B/52-Outer Coating *191604587-0051*	LPS MUDDED ELBOWS	Gray Fibrous Homogeneous	25% Glass	70% Non-fibrous (Other)	5% Chrysotile
MCASB152-B/52-Mudded Elbow Insulation *191604587-0051A*	LPS MUDDED ELBOWS	Gray/White Fibrous Homogeneous	30% Min. Wool	70% Ca Carbonate	None Detected
MCASB152-B/53-Outer Coating *191604587-0052*	LPS MUDDED ELBOWS	Gray/White Fibrous Homogeneous	20% Glass	70% Non-fibrous (Other)	10% Chrysotile
MCASB152-B/53-Mudded Elbow Insulation *191604587-0052A*	LPS MUDDED ELBOWS	Gray/White Fibrous Homogeneous	35% Min. Wool	65% Ca Carbonate	None Detected
MCASB152-B/54-Outer Coating *191604587-0053*	HARD WHT. PI ON LPS LINES	Gray Fibrous Homogeneous	30% Glass	30% Ca Carbonate 40% Non-fibrous (Other)	None Detected
MCASB152-B/54-Pipe Insulation *191604587-0053A*	HARD WHT. PI ON LPS LINES	Gray Fibrous Homogeneous	45% Min. Wool	55% Ca Carbonate	None Detected
MCASB152-B/55 *191604587-0054*	HARD WHT. PI ON LPS LINES	Gray Fibrous Homogeneous	55% Min. Wool 15% Glass	25% Ca Carbonate 5% Non-fibrous (Other)	None Detected
MCASB152-B/56 *191604587-0055*	HARD WHT. PI ON LPS LINES	Gray/Pink Fibrous Homogeneous	45% Min. Wool 10% Glass	35% Ca Carbonate 10% Non-fibrous (Other)	None Detected

Initial report from: 05/05/2016 11:55:29

EMSL Analytical, Inc.
10768 Baltimore Avenue Beltsville, MD 20705
Tel/Fax: (301) 937-5700 / (301) 937-5701
http://www.EMSL.com / beltsvillelab@emsl.com

EMSL Order: 191604587
Customer ID: GLOC62
Customer PO:
Project ID:

Test Report: Asbestos Analysis of Bulk Materials via EPA 600/R-93/116 Method using Polarized Light Microscopy

			Non-Asbestos		Asbestos
Sample	**Description**	**Appearance**	**% Fibrous**	**% Non-Fibrous**	**% Type**
MCASB152-B/57 *191604587-0056*	HARD WHT. PI ON HPS LINES	White Fibrous Homogeneous	25% Min. Wool	65% Gypsum 10% Non-fibrous (Other)	None Detected
MCASB152-B/58 *191604587-0057*	HARD WHT. PI ON HPS LINES	White Fibrous Homogeneous	35% Cellulose	60% Ca Carbonate 5% Non-fibrous (Other)	None Detected

Analyst(s)

George Malone (64)
Luba Stockert (4)

Joe Centifonti, Laboratory Manager
or Other Approved Signatory

EMSL maintains liability limited to cost of analysis. This report relates only to the samples reported and may not be reproduced, except in full, without written approval by EMSL. EMSL bears no responsibility for sample collection activities or analytical method limitations. Interpretation and use of test results are the responsibility of the client. This report must not be used by the client to claim product certification, approval, or endorsement by NVLAP, NIST or any agency of the federal government. Non-friable organically bound materials present a problem matrix and therefore EMSL recommends gravimetric reduction prior to analysis. Samples received in good condition unless otherwise noted. Estimated accuracy, precision and uncertainty data available upon request. Unless requested by the client, building materials manufactured with multiple layers (i.e. linoleum, wallboard, etc.) are reported as a single sample. Reporting limit is 1%

Samples analyzed by EMSL Analytical, Inc. Beltsville, MD NVLAP Lab Code 200293-0

Initial report from: 05/05/2016 11:55:29

EMSL Analytical, Inc.
10768 Baltimore Avenue, Beltsville, MD 20705
Phone/Fax: (301) 937-5700 / (301) 937-5701
http://www.EMSL.com beltsvillelab@emsl.com

EMSL Order:	191604585
CustomerID:	GLOC62
CustomerPO:	
ProjectID:	

Attn: **Patrick Rush**
Global Consulting, Inc.
1818 New York Avenue N.E.
Suite 107
Washington, DC 20002

Phone:	(202) 832-1433
Fax:	(202) 832-1434
Received:	05/03/16 12:20 PM
Collected:	5/5/2016

Project: **W052/ JACOBS MCAS B152**

Test Report: Lead in Paint Chips by Flame AAS (SW 846 3050B/7000B)*

Client Sample Description	*Lab ID*	*Collected*	*Analyzed*	*Lead Concentration*
MCASB152-L/1	*191604585-0001*	4/29/2016	5/3/2016	0.034 % wt
	Site: YELLOW METAL HARD RAILS & STAIRS			
MCASB152-L/2	*191604585-0002*	4/30/2016	5/3/2016	0.058 % wt
	Site: GRAY CONCRETE WALLS			
MCASB152-L/3	*191604585-0003*	5/1/2016	5/3/2016	<0.010 % wt
	Site: BLUE DUPLEZ STAINER			
MCASB152-L/4	*191604585-0004*	5/2/2016	5/3/2016	2.0 % wt
	Site: GRAY STEEL SUPPORT BEAMS			
MCASB152-L/5	*191604585-0005*	5/3/2016	5/3/2016	<0.047 % wt
	Site: SILVER BASEMENT ASH HOPPERS			
MCASB152-L/6	*191604585-0006*	5/4/2016	5/3/2016	0.014 % wt
	Site: WHT. COAL CONVEYER BELT			
MCASB152-L/7	*191604585-0007*	5/5/2016	5/3/2016	<0.010 % wt
	Site: BLK. PRECIPITATOR			

Joe Centifonti, Laboratory Manager
or other approved signatory

*Analysis following Lead in Paint by EMSL SOP/Determination of Environmental Lead by FLAA. Reporting limit is 0.010 % wt based on the minimum sample weight per our SOP. Unless noted, results in this report are not blank corrected. This report relates only to the samples reported above and may not be reproduced, except in full, without written approval by EMSL. EMSL bears no responsibility for sample collection activities. Samples received in good condition unless otherwise noted. "<" (less than) result signifies that the analyte was not detected at or above the reporting limit. Measurement of uncertainty is available upon request. The QC data associated with the sample results included in this report meet the recovery and precision requirements unless specifically indicated otherwise.
Samples analyzed by EMSL Analytical, Inc. Beltsville, MD A2LA Accredited Environmental Testing Cert #2845.02

Initial report from 05/03/2016 16:09:24

EMSL Analytical, Inc.
10768 Baltimore Avenue

Beltsville, MD 20705
PHONE: (301) 937-5700
FAX: (301) 937-5701

EMSL ANALYTICAL, INC.
LABORATORY • PRODUCTS • TRAINING

Lead (Pb) Chain of Custody

EMSL Order ID *(Lab Use Only):* 191604585

Company: Global Consulting Inc.		**EMSL-Bill to:** ☐ Different ☑ Same If Bill to is Different note instructions in Comments**	
Street: 1818 New York Ave NE #111		*Third Party Billing requires written authorization from third party*	
City: Washington	**State/Province:** DC	**Zip/Postal Code:** 20002	**Country:** US
Report To (Name): Patrick Rush		**Telephone #:** 7038518384	
Email Address: prush@gciusa.biz		**Fax #:**	**Purchase Order:**
Project Name/Number: W052/Jacobs MCAS B152		**Please Provide Results:** ☐ FAX ☑ E-mail ☐ Mail	
U.S. State Samples Taken: NC		**CT Samples:** ☐ Commercial/Taxable ☐ Residential/Tax Exempt	

Turnaround Time (TAT) Options* - Please Check

☐ 3 Hour	☐ 6 Hour	☒ 24 Hour	☐ 48 Hour	☐ 72 Hour	☐ 96 Hour	☐ 1 Week	☐ 2 Week

**Analysis completed in accordance with EMSL's Terms and Conditions located in the Price Guide*

Matrix	Method	Instrument	Reporting Limit	Check
Chips ☒ % by wt. ☐ mg/cm² ☐ ppm	SW846-7000B	Flame Atomic Absorption	0.01%	☒
Air	NIOSH 7082	Flame Atomic Absorption	4 µg/filter	☐
	NIOSH 7105	Graphite Furnace AA	0.03 µg/filter	☐
	NIOSH 7300 modified	ICP-AES/ICP-MS	0.5 µg/filter	☐
Wipe* ASTM ☐ non ASTM ☐ *if no box is checked, non-ASTM Wipe is assumed	SW846-7000B	Flame Atomic Absorption	10 µg/wipe	☐
	SW846-6010B or C	ICP-AES	1.0 µg/wipe	☐
	SW846-7000B/7010	Graphite Furnace AA	0.075 µg/wipe	☐
TCLP	SW846-1311/7000B/SM 3111B	Flame Atomic Absorption	0.4 mg/L (ppm)	☐
	SW846-1131/SW846-6010B or C	ICP-AES	0.1 mg/L (ppm)	☐
Soil	SW846-7000B	Flame Atomic Absorption	40 mg/kg (ppm)	☐
	SW846-7010	Graphite Furnace AA	0.3 mg/kg (ppm)	☐
	SW846-6010B or C	ICP-AES	2 mg/kg (ppm)	☐
Wastewater Unpreserved ☐ Preserved with HNO_3 pH < 2 ☐	SM3111B/SW846-7000B	Flame Atomic Absorption	0.4 mg/L (ppm)	☐
	EPA 200.9	Graphite Furnace AA	0.003 mg/L (ppm)	☐
	EPA 200.7	ICP-AES	0.020 mg/L (ppm)	☐
Drinking Water Unpreserved ☐ Preserved with HNO_3 pH < 2 ☐	EPA 200.9	Graphite Furnace AA	0.003 mg/L (ppm)	☐
	EPA 200.8	ICP-MS	0.001 mg/L (ppm)	☐
TSP/SPM Filter	40 CFR Part 50	ICP-AES	12 µg/filter	☐
	40 CFR Part 50	Graphite Furnace AA	3.6 µg/filter	☐
Other:				☐

Name of Sampler: PATRICK RUSH **Signature of Sampler:** [signature]

Sample #	Location	Volume/Area	Date/Time Sampled

Client Sample #'s 1 - 7 **Total # of Samples:** 7

Relinquished (Client):		**Date:**		**Time:**	
Received (Lab):	[signature]	**Date:**	8/25/16	**Time:**	1220pm

Comments:

Page 1 of 1 pages

Sample #	Component	Date
MCASB152-L/1	yellow metal hardrails and stairs	4/29/2016
MCASB152-L/2	gray concrete walls	4/30/2016
MCASB152-L/3	blue duplex stainer	5/1/2016
MCASB152-L/4	gray stell support beams	5/2/2016
MCASB152-L/5	silver basement ash hoppers	5/3/2016
MCASB152-L/6	white coal conveyer belt	5/4/2016
MCASB152-L/7	black precipitator	5/5/2016

OrderID: 191604587

EMSL ANALYTICAL, INC.
LABORATORY • PRODUCTS • TRAINING

Asbestos Bulk Building Material Chain of Custody

EMSL Order Number *(Lab Use Only)*: 191604587

EMSL Analytical, Inc.
10768 Baltimore Avenue

Beltsville, MD 20705
PHONE: (301) 937-5700
FAX: (301) 937-5701

Company : Global Consulting Inc.	**EMSL-Bill to:** ☑ Same ☐ Different If Bill to is Different note instructions in Comments** *Third Party Billing requires written authorization from third party*
Street: 1818 New York Ave NE #111	
City: Washington **State/Province:** DC	**Zip/Postal Code:** 20002 **Country:** US
Report To (Name): Patrick Rush	**Telephone #:** 7038518384
Email Address: prush@gciusa.biz	**Fax #:** **Purchase Order:**
Project Name/Number: W052/Jacobs MLAS B152	**Please Provide Results:** ☐ Fax ✓ Email ☐ Mail
U.S. State Samples Taken: NC	**CT Samples:** ☐ Commercial/Taxable ☐ Residential/Tax Exempt

Turnaround Time (TAT) Options* – Please Check

☐ 3 Hour ☐ 6 Hour ☐ 24 Hour ☒ 48 Hour ☒ 72 Hour ☐ 96 Hour ☐ 1 Week ☐ 2 Week

**For TEM Air 3 hr through 6 hr, please call ahead to schedule *There is a premium charge for 3 Hour TEM AHERA or EPA Level II TAT. You will be asked to sign an authorization form for this service. Analysis completed in accordance with EMSL's Terms and Conditions located in the Analytical Price Guide.*

PLM - Bulk (reporting limit)	TEM – Bulk
■ PLM EPA 600/R-93/116 (<1%)	☐ TEM EPA NOB – EPA 600/R-93/116 Section 2.5.5.1
☐ PLM EPA NOB (<1%)	☐ NY ELAP Method 198.4 (TEM)
Point Count ☐ 400 (<0.25%) ☐ 1000 (<0.1%)	☐ Chatfield Protocol (semi-quantitative)
Point Count w/Gravimetric ☐ 400 (<0.25%) ☐ 1000 (<0.1%)	☐ TEM % by Mass – EPA 600/R-93/116 Section 2.5.5.2
☐ NIOSH 9002 (<1%)	☐ TEM Qualitative via Filtration Prep Technique
☐ NY ELAP Method 198.1 (friable in NY)	☐ TEM Qualitative via Drop Mount Prep Technique
☐ NY ELAP Method 198.6 NOB (non-friable-NY)	**Other**
☐ OSHA ID-191 Modified	☐
☐ Standard Addition Method	

☐ **Check For Positive Stop – Clearly Identify Homogenous Group** **Date Sampled:** 4/28/16-4/29/16

Samplers Name: Patrick Rush **Samplers Signature:**

Sample #	HA #	Sample Location	Material Description
		see attached	

Client Sample # (s): MLAS B152-B/1 - MLAS B152-B/56 **Total # of Samples:** 56

Relinquished (Client): **Date:** **Time:**

Received (Lab): [illegible] **Date:** 5/3/16 **Time:** 1220pm

Comments/Special Instructions:

Page 1 of _____ pages

Sample #	Homogeneous Description
MCASB152-B/1	Asphalt roofing on ash silo
MCASB152-B/2	roof flashing on ash silo
MCASB152-B/3	roof tar on ash silo
MCASB152-B/4	insulation on boiler doors
MCASB152-B/5	insulation on boiler doors
MCASB152-B/6	insulation on boiler doors
MCASB152-B/7	interior boiler insulation
MCASB152-B/8	interior boiler insulation
MCASB152-B/9	interior boiler insulation
MCASB152-B/10	fire brick
MCASB152-B/11	fire brick
MCASB152-B/12	fire brick
MCASB152-B/13	gaskets on boiler doors
MCASB152-B/14	tank end-cap insulation on #1 & #2 boilers
MCASB152-B/15	tank end-cap insulation on #1 & #2 boilers
MCASB152-B/16	tank end-cap insulation on #1 & #2 boilers
MCASB152-B/17	LPS mudded elbows
MCASB152-B/18	HPS Mudded elbows
MCASB152-B/19	HPS Mudded elbows
MCASB152-B/21	Hard white PI on HPS Lines
MCASB152-B/22	end cap insulation on tanks on 68' level
MCASB152-B/23	end cap insulation on tanks on 68' level
MCASB152-B/24	end cap insulation on tanks on 68' level
MCASB152-B/25	insulation on tanks on 68' level
MCASB152-B/26	insulation on tanks on 68' level
MCASB152-B/27	insulation on tanks on 68' level
MCASB152-B/28	PI on treated water lines
MCASB152-B/29	PI on treated water lines
MCASB152-B/30	PI on treated water lines
MCASB152-B/31	trater water lines mudded elbows
MCASB152-B/32	trater water lines mudded elbows
MCASB152-B/33	trater water lines mudded elbows
MCASB152-B/34	HPS Mudded elbows
MCASB152-B/35	insulation on flash tanks
MCASB152-B/36	insulation on flash tanks
MCASB152-B/37	insulation on flash tanks
MCASB152-B/38	asphalt sheet roofing
MCASB152-B/39	duplex strainer insulation
MCASB152-B/40	duplex strainer insulation
MCASB152-B/41	duplex strainer insulation
MCASB152-B/42	gasket on basement ash hoppers
MCASB152-B/43	insulation on Ex. Boiler ID Fan
MCASB152-B/44	insulation on Ex. Boiler ID Fan
MCASB152-B/45	insulation on Ex. Boiler ID Fan
MCASB152-B/46	Ex. Boiler No. 1 & No. 2 insulation

MCASB152-B/47	Ex. Boiler No. 1 & No. 2 insulation
MCASB152-B/48	Ex. Boiler No. 1 & No. 2 insulation
MCASB152-B/49	asphalt roof on precipitator
MCASB152-B/50	gasker on precipitator exhaust
MCASB152-B/51	roof flashing on main roof
MCASB152-B/52	LPS mudded elbows
MCASB152-B/53	LPS mudded elbows
MCASB152-B/54	Hard white PI on LPS lines
MCASB152-B/55	Hard white PI on LPS lines
MCASB152-B/56	Hard white PI on LPS lines
MCASB152-B/57	Hard white PI on HPS lines
MCASB152-B/58	Hard white PI on HPS lines

Appendix 2:

Sample Location Drawings

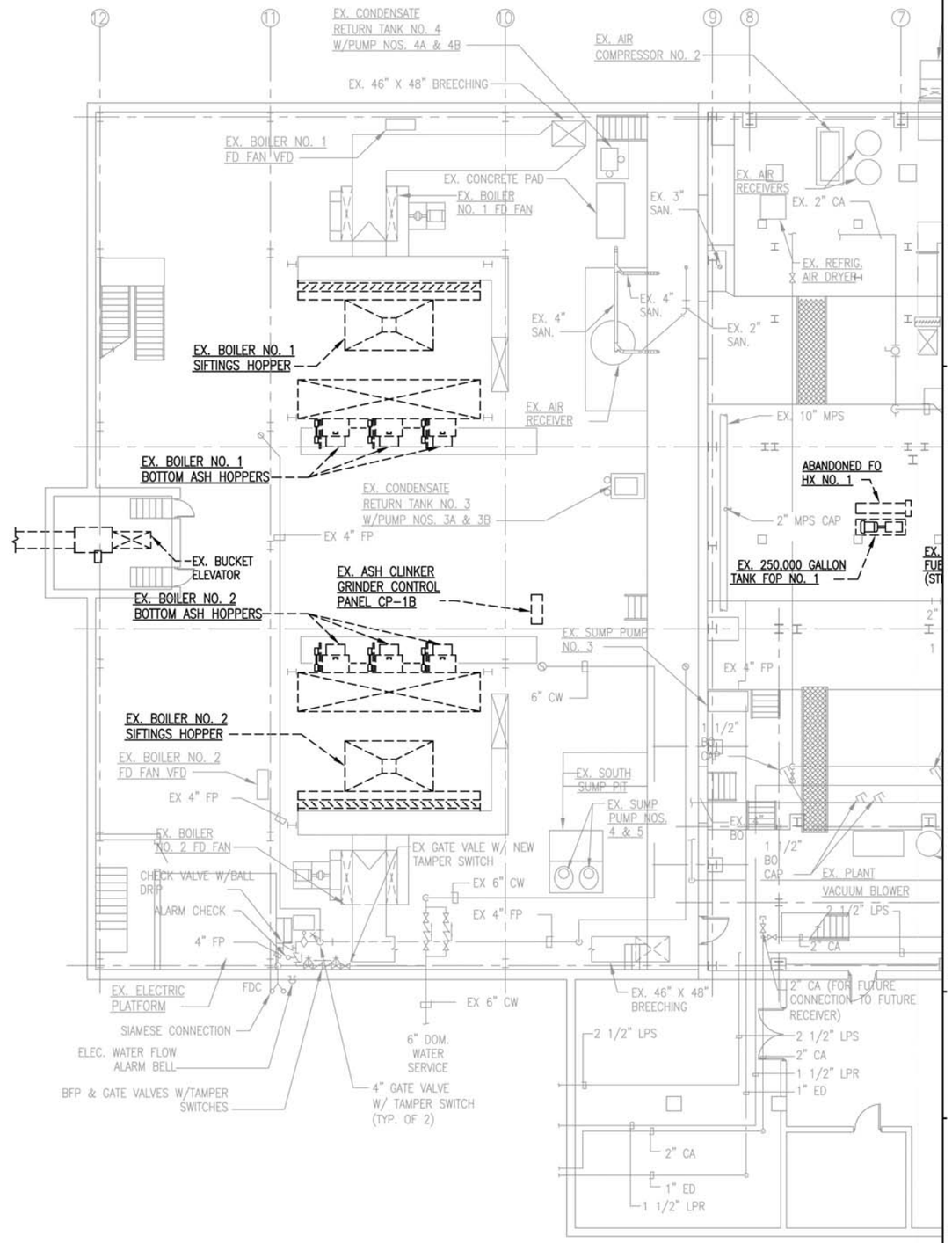

Sample Locations

- MCAS B-152-B/# ACM Positive Samples
- MCAS B-152-B/# ACM Negative Samples
- MCAS B-152-L/# LBP Positive Samples
- MCAS B-152-L/# LBP Negative Samples

PLAN NORTH

MECHANICAL BASEMENT PLAN DEMOLITION PART A

SCALE: 1/8" = 1'-0"

HAZMAT SURVEY for BLDG 152 CENTRAL HEATING PLANT CONVERSION

NOTE:

	NAVAL FACILITES ENGINEERING MID-ATLANTIC	
	P-224 CENTRAL HEATING PLANT CONVERSION	
Rev Number	Description	Date
Revisions		

GLOBAL CONSULTING, INC.
1818 NEW YORK AVE. SUITE 111
WASHINGTON, DC 20002
Telephone 202-832-1433
Fax 202-832-1434

Drawing Title
HAZMAT INSPECTION MECHANICAL BASEMENT PLAN DEMOLITION PART A

File Name: FILE	Scale: 1/16"=1'-0"
Date	Project Number: W052
Drawn By: ULD	
Checked By: PAR	

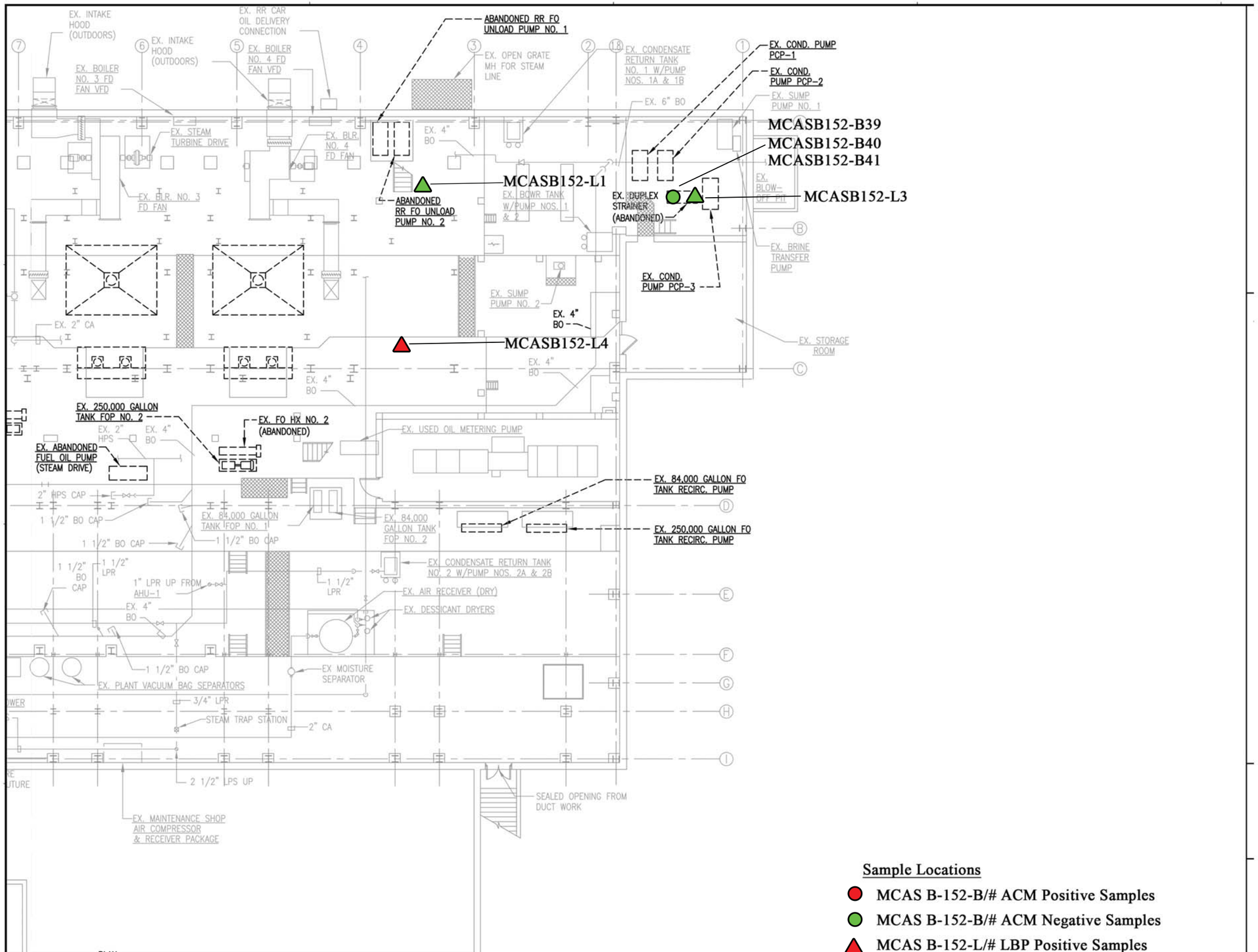

MECHANICAL BASEMENT PLAN DEMOLITION PART B
SCALE: 1/8" = 1'-0"

Sample Locations

- MCAS B-152-B/# ACM Positive Samples
- MCAS B-152-B/# ACM Negative Samples
- MCAS B-152-L/# LBP Positive Samples
- MCAS B-152-L/# LBP Negative Samples

HAZMAT SURVEY for BLDG 152 CENTRAL HEATING PLANT CONVERSION

NOTE:

	NAVAL FACILITES ENGINEERING MID-ATLANTIC	
	P-224 CENTRAL HEATING PLANT CONVERSION	
Rev Number	Description	Date
Revisions		

GLOBAL CONSULTING, INC.
1818 NEW YORK AVE. SUITE 111
WASHINGTON, DC 20002
Telephone 202-832-1433
Fax 202-832-1434

Drawing Title
HAZMAT INSPECTION MECHANICAL BASEMENT PLAN DEMOLITION PART B

File Name: FILE	Scale: 1/16"=1'-0"
Date:	Project Number: W052
Drawn By: ULD	
Checked By: PAR	

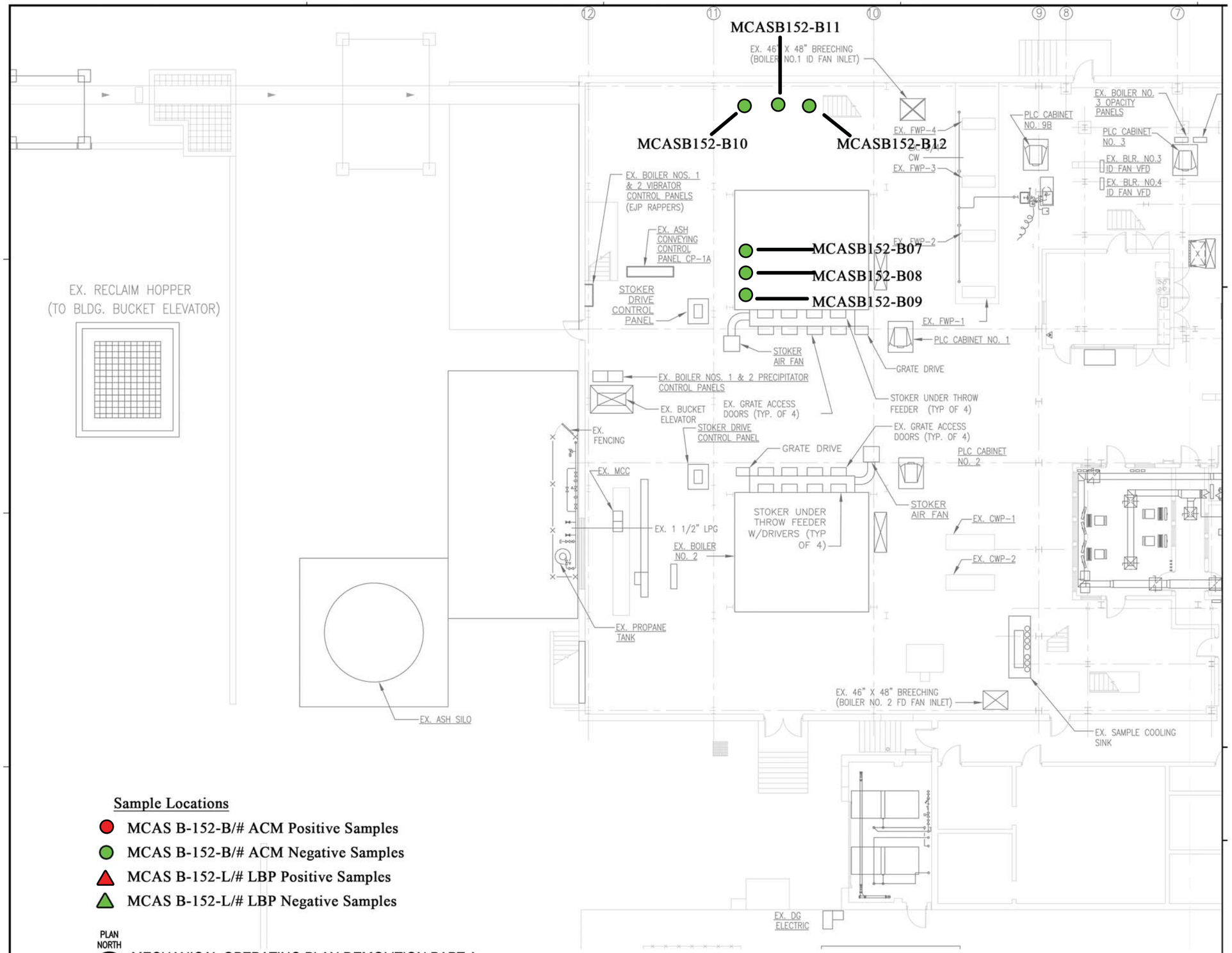

Sample Locations

- MCAS B-152-B/# ACM Positive Samples
- MCAS B-152-B/# ACM Negative Samples
- MCAS B-152-L/# LBP Positive Samples
- MCAS B-152-L/# LBP Negative Samples

HAZMAT SURVEY for BLDG 152 CENTRAL HEATING PLANT CONVERSION

NOTE:

	NAVAL FACILITES ENGINEERING MID-ATLANTIC	
	P-224 CENTRAL HEATING PLANT CONVERSION	
Rev Number	Description	Date
Revisions		

GLOBAL CONSULTING, INC.
1818 NEW YORK AVE. SUITE 111
WASHINGTON, DC 20002
Telephone 202-832-1433
Fax 202-832-1434

Drawing Title
HAZMAT
INSPECTION
MECHANICAL OPERATING PLAN DEMOLITION PART A

File Name: FILE	Scale: 1/16"=1'-0"
Date	Project Number: W052
Drawn By: ULD	
Checked By: PAR	

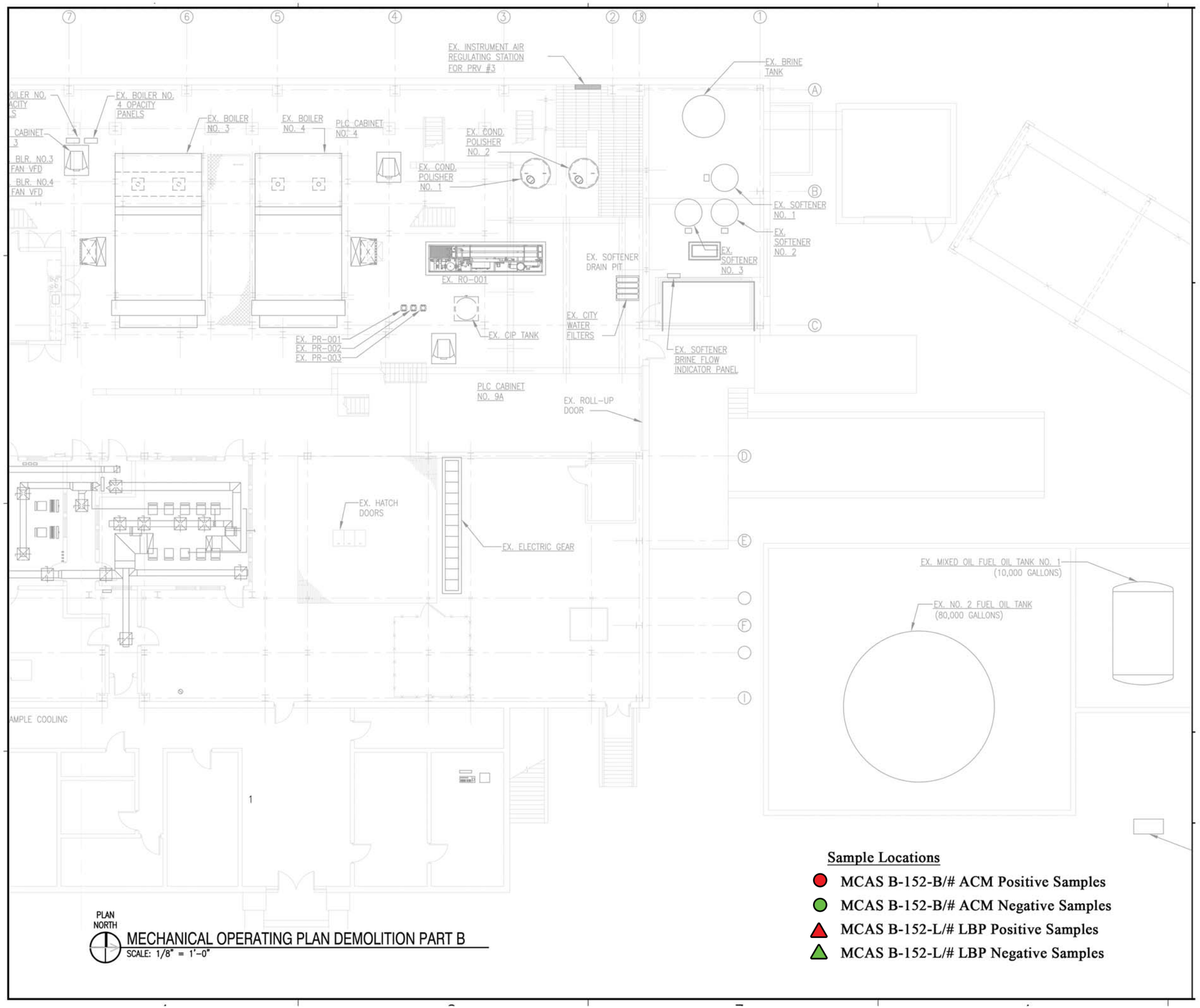

MECHANICAL OPERATING PLAN DEMOLITION PART B
SCALE: 1/8" = 1'-0"

Sample Locations

- MCAS B-152-B/# ACM Positive Samples
- MCAS B-152-B/# ACM Negative Samples
- MCAS B-152-L/# LBP Positive Samples
- MCAS B-152-L/# LBP Negative Samples

HAZMAT SURVEY for BLDG 152 CENTRAL HEATING PLANT CONVERSION

NOTE:

NAVAL FACILITES ENGINEERING MID-ATLANTIC
P-224 CENTRAL HEATING PLANT CONVERSION

Rev Number	Description	Date
Revisions		

GLOBAL CONSULTING, INC.
1818 NEW YORK AVE. SUITE 111
WASHINGTON, DC 20002
Telephone 202-832-1433
Fax 202-832-1434

Drawing Title
HAZMAT INSPECTION MECHANICAL OPERATING PLAN DEMOLITION PART B

File Name: FILE	Scale: 1/16"=1'-0"
Date:	Project Number: W052
Drawn By: ULD	
Checked By: PAR	

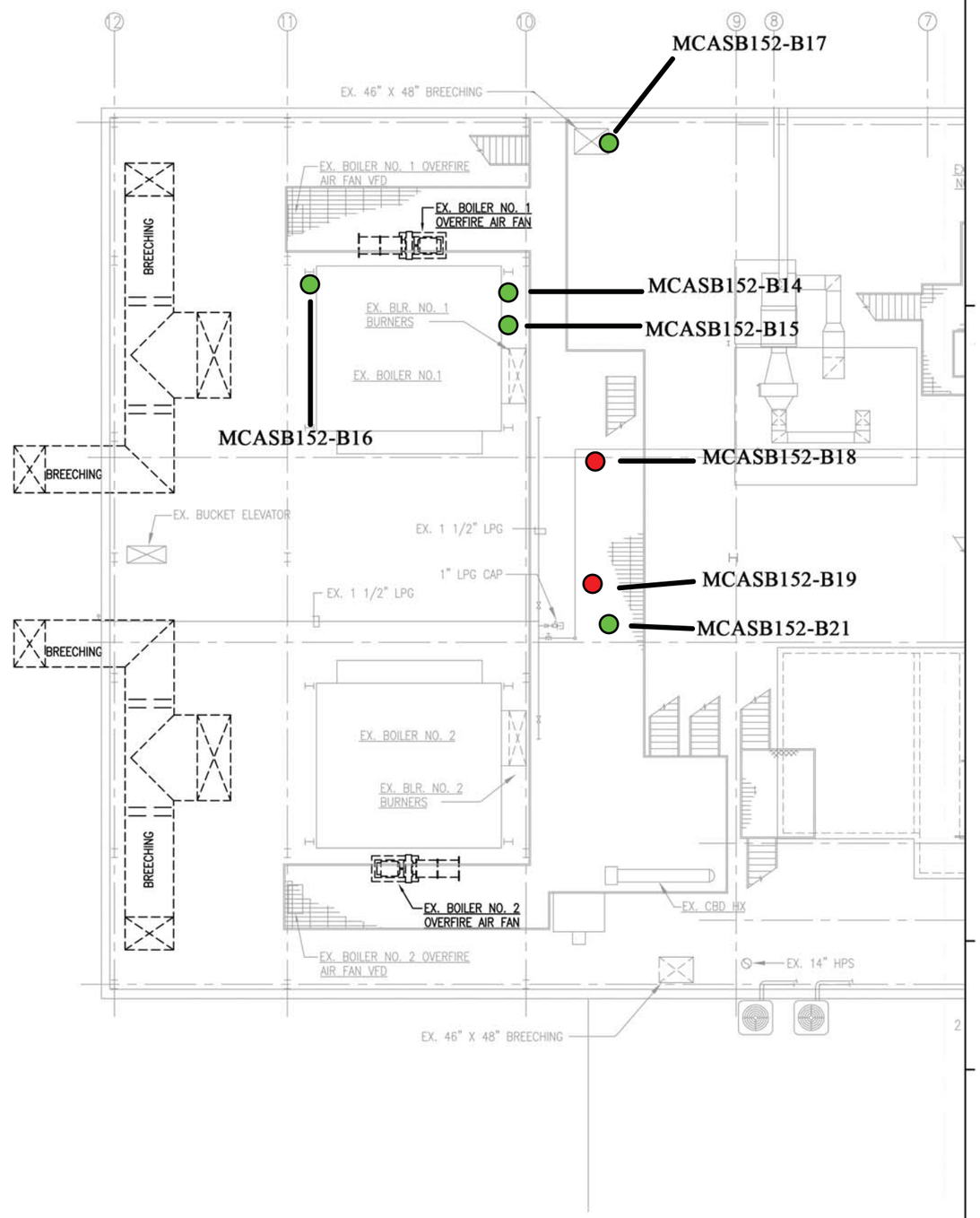

Sample Locations

- MCAS B-152-B/# ACM Positive Samples
- MCAS B-152-B/# ACM Negative Samples
- MCAS B-152-L/# LBP Positive Samples
- MCAS B-152-L/# LBP Negative Samples

PLAN NORTH

MECHANICAL PLAN AT EL. 40'-8" DEMOLITION PART A

SCALE: 1/8" = 1'-0"

HAZMAT SURVEY for BLDG 152 CENTRAL HEATING PLANT CONVERSION

NOTE:

NAVAL FACILITES ENGINEERING MID-ATLANTIC

P-224 CENTRAL HEATING PLANT CONVERSION

Rev Number	Description	Date
Revisions		

GLOBAL CONSULTING, INC.
1818 NEW YORK AVE. SUITE 111
WASHINGTON, DC 20002
Telephone 202-832-1433
Fax 202-832-1434

Drawing Title

HAZMAT INSPECTION MECHANICAL PLAN AT EL.40-8 DEMOLITION PART A

File Name: FILE	Scale: 1/16"=1'-0"
Date:	Project Number: W052
Drawn By: ULD	
Checked By: PAR	

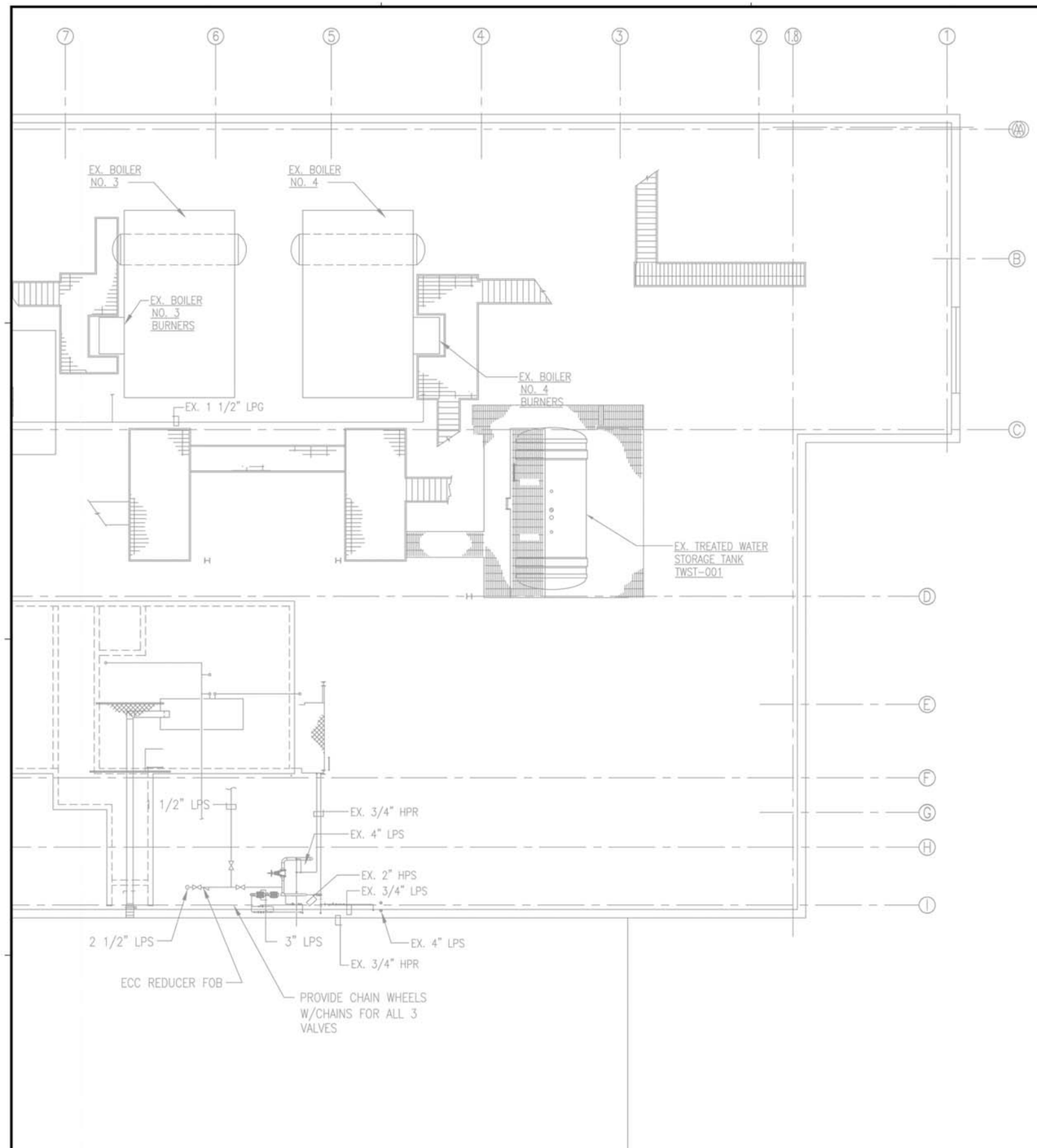

PLAN NORTH

MECHANICAL PLAN AT EL. 40'-8" DEMOLITION PART B

SCALE: 1/8" = 1'-0"

Sample Locations

- MCAS B-152-B/# ACM Positive Samples
- MCAS B-152-B/# ACM Negative Samples
- MCAS B-152-L/# LBP Positive Samples
- MCAS B-152-L/# LBP Negative Samples

HAZMAT SURVEY for BLDG 152 CENTRAL HEATING PLANT CONVERSION

NOTE:

NAVAL FACILITES ENGINEERING MID-ATLANTIC

P-224 CENTRAL HEATING PLANT CONVERSION

Rev Number	Description	Date
Revisions		

GLOBAL CONSULTING, INC.
1818 NEW YORK AVE. SUITE 111
WASHINGTON, DC 20002
Telephone 202-832-1433
Fax 202-832-1434

Drawing Title

HAZMAT INSPECTION MECHANICAL PLAN AT EL.40-8 DEMOLITION PART B

File Name: FILE	Scale: 1/16"=1'-0"
Date:	Project Number: W052
Drawn By: ULD	
Checked By: PAR	

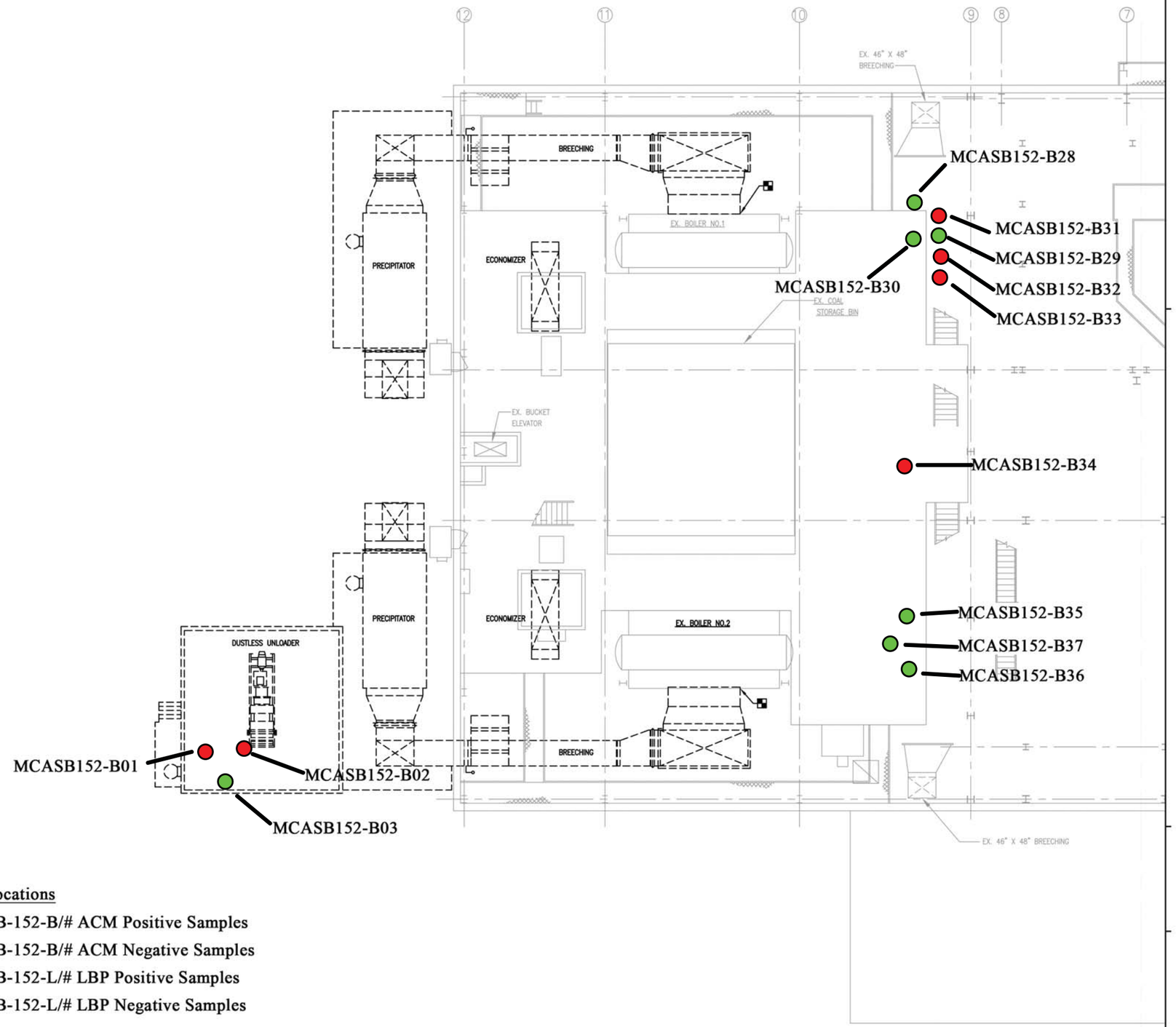

Sample Locations

- MCAS B-152-B/# ACM Positive Samples
- MCAS B-152-B/# ACM Negative Samples
- MCAS B-152-L/# LBP Positive Samples
- MCAS B-152-L/# LBP Negative Samples

PLAN NORTH

MECHANICAL PLAN AT EL. 50'-0" DEMOLITION PART A

SCALE: 1/8" = 1'-0"

HAZMAT SURVEY for BLDG 152 CENTRAL HEATING PLANT CONVERSION

NOTE:

NAVAL FACILITES ENGINEERING MID-ATLANTIC

P-224 CENTRAL HEATING PLANT CONVERSION

Rev Number	Description	Date
Revisions		

GLOBAL CONSULTING, INC.
1818 NEW YORK AVE. SUITE 111
WASHINGTON, DC 20002
Telephone 202-832-1433
Fax 202-832-1434

Drawing Title

HAZMAT INSPECTION MECHANICAL PLAN AT EL.50'-0" DEMOLITION PART A

File Name: FILE	Scale: 1/16"=1'-0"
Date:	Project Number: W052
Drawn By: ULD	
Checked By: PAR	

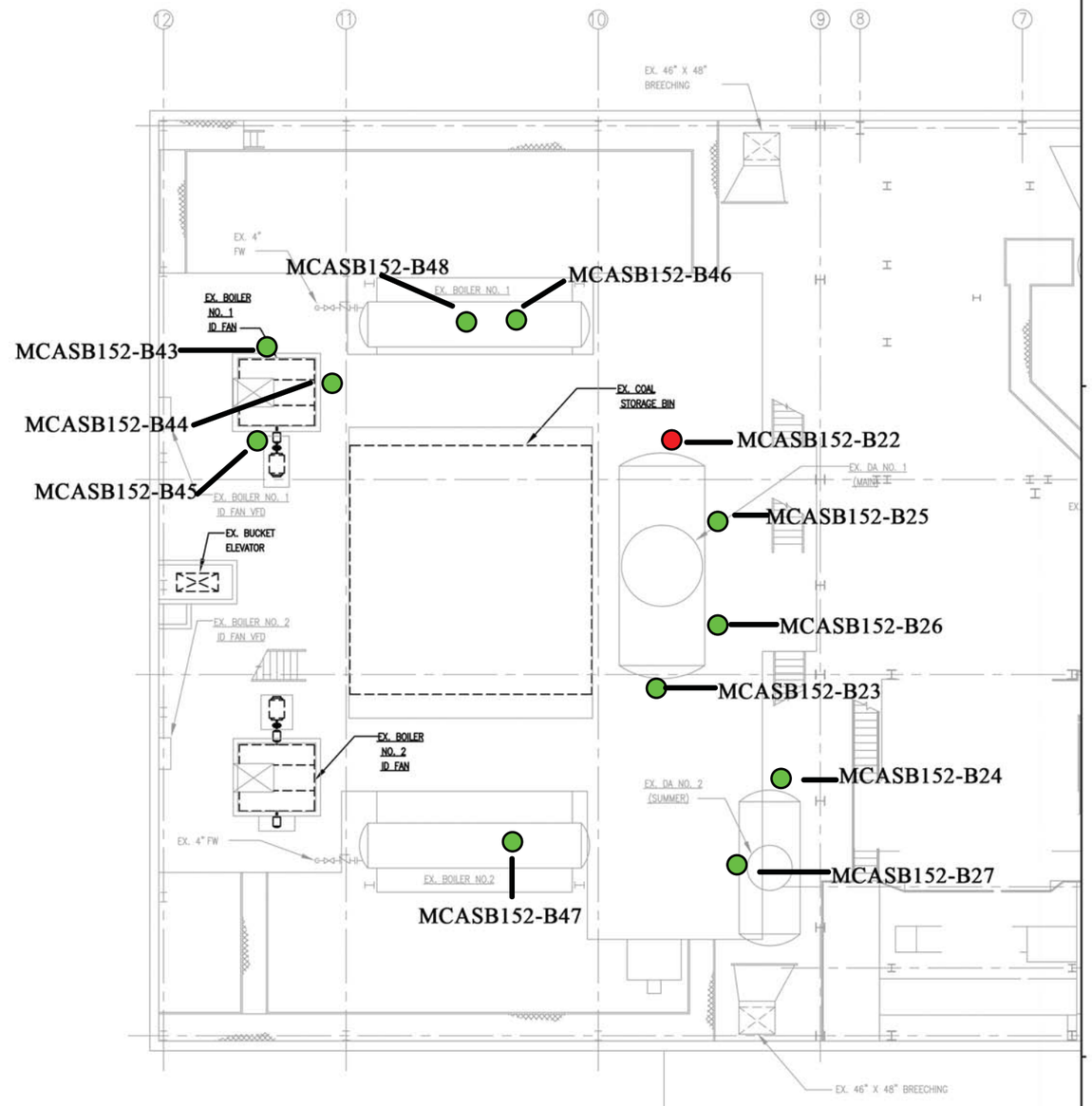

PLAN NORTH

MECHANICAL PLAN AT EL. 68'-0" DEMOLITION PART A

SCALE: 1/8" = 1'-0"

Sample Locations

- MCAS B-152-B/# ACM Positive Samples
- MCAS B-152-B/# ACM Negative Samples
- MCAS B-152-L/# LBP Positive Samples
- MCAS B-152-L/# LBP Negative Samples

HAZMAT SURVEY for BLDG 152 CENTRAL HEATING PLANT CONVERSION

NOTE:

NAVAL FACILITES ENGINEERING MID-ATLANTIC

P-224 CENTRAL HEATING PLANT CONVERSION

Rev Number	Description	Date
Revisions		

GLOBAL CONSULTING, INC.
1818 NEW YORK AVE. SUITE 111
WASHINGTON, DC 20002
Telephone 202–832–1433
Fax 202–832–1434

Drawing Title

HAZMAT INSPECTION MECHANICAL PLAN AT EL.68'-0" DEMOLITION PART A

File Name: FILE	Scale: 1/16"=1'-0"
Date:	Project Number: W052
Drawn By: ULD	
Checked By: PAR	

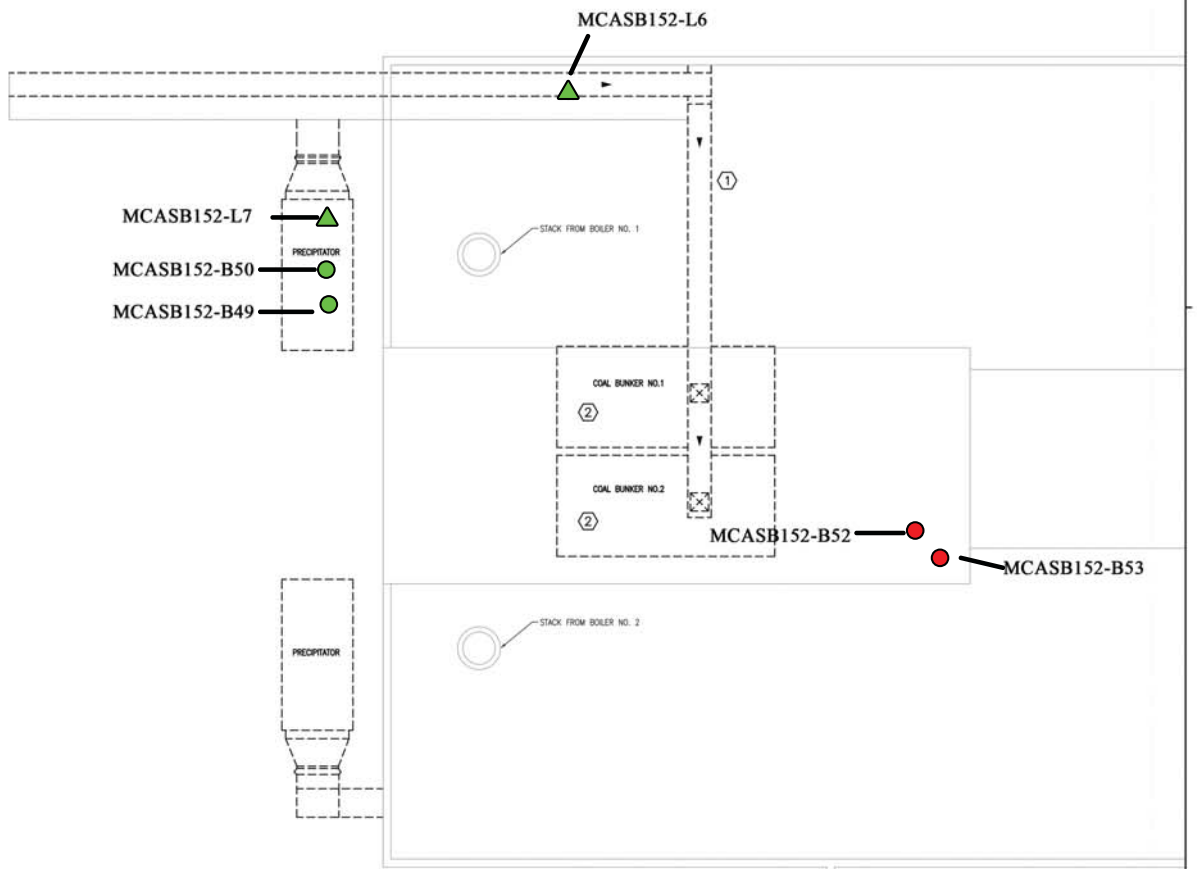

Sample Locations

- MCAS B-152-B/# ACM Positive Samples
- MCAS B-152-B/# ACM Negative Samples
- MCAS B-152-L/# LBP Positive Samples
- MCAS B-152-L/# LBP Negative Samples

PLAN NORTH

MECHANICAL ROOF PLAN DEMOLITION PART A

SCALE: 1/8" = 1'-0"

HAZMAT SURVEY for BLDG 152 CENTRAL HEATING PLANT CONVERSION

NOTE:

	NAVAL FACILITES ENGINEERING MID-ATLANTIC	
	P-224 CENTRAL HEATING PLANT CONVERSION	
Rev Number	Description	Date
Revisions		

GLOBAL CONSULTING, INC.
1818 NEW YORK AVE. SUITE 111
WASHINGTON, DC 20002
Telephone 202-832-1433
Fax 202-832-1434

Drawing Title
HAZMAT
INSPECTION
MECHANICAL ROOF PLAN DEMOLITION PART A

File Name: FILE	Scale: 1/16"=1'-0"
Date:	Project Number: W052
Drawn By: ULD	
Checked By: PAR	

Appendix 3:

Photo Log

HAZMAT Depicted	
End cap insulation on tanks on 68’ level	
Mudded elbows and joints on treated water lines	
Mudded elbows and joints on low pressure steam lines	

Grey paint on steel support columns			

Appendix 4:

Inspector Licensure

North Carolina
Asbestos Accreditation

EXPIRATION			
04-30-2016			
DOB	SEX	HT	WT
06-28-1983	M	6'1"	235
CLASS		#	EXP
INSPECTOR		12909	04-16

Patrick Rush
7501 Glenside Dr
Takoma Park, MD 20912

108604

This accreditation identification card has been issued pursuant to Chapter 130A, Article 19 of the NC General Statutes and is subject to revocation if the holder fails to comply with the requirements of 10A NCAC 41C Section .0600 or if the accreditation was issued based upon incorrect or inadequate information.

This card is nontransferable and will become invalid if loaned or given to another person for identification. This card will also be invalid if altered or defaced.

This card is the property of the North Carolina Department Health and Human Services. It must be returned to the Department if the holder's accreditation is revoked or if this card is invalidated. Any person performing regulated asbestos activities without current accreditation shall be subject to legal sanction.

YOU MUST HAVE THIS IDENTIFICATION CARD WITH YOU ON THE JOB.

For information or corrections, direct all inquires to the following:

Health Hazards Control Unit
NC Department of Health and Human Services
Division of Public Health
1912 Mail Service Center Raleigh, NC 27699-1912
(919) 707-5950

THIS PAGE HAS BEEN INTENTIONALLY LEFT BLANK

SECTION 02 82 33.13 20

REMOVAL/CONTROL AND DISPOSAL OF PAINT WITH LEAD
08/11

PART 1 GENERAL

1.1 REFERENCES

The publications listed below form a part of this specification to the extent referenced. The publications are referred to within the text by the basic designation only.

AMERICAN INDUSTRIAL HYGIENE ASSOCIATION (AIHA)

AIHA Z88.6	(2006) Respiratory Protection - Respirator Use-Physical Qualifications for Personnel

U.S. DEPARTMENT OF HOUSING AND URBAN DEVELOPMENT (HUD)

HUD 6780	(1995; Errata Aug 1996;Rev Ch. 7 - 1997) Guidelines for the Evaluation and Control of Lead-Based Paint Hazards in Housing

U.S. NATIONAL ARCHIVES AND RECORDS ADMINISTRATION (NARA)

29 CFR 1926.103	Respiratory Protection
29 CFR 1926.21	Safety Training and Education
29 CFR 1926.33	Access to Employee Exposure and Medical Records
29 CFR 1926.55	Gases, Vapors, Fumes, Dusts, and Mists
29 CFR 1926.59	Hazard Communication
29 CFR 1926.62	Lead
29 CFR 1926.65	Hazardous Waste Operations and Emergency Response
40 CFR 260	Hazardous Waste Management System: General
40 CFR 261	Identification and Listing of Hazardous Waste
40 CFR 262	Standards Applicable to Generators of Hazardous Waste
40 CFR 263	Standards Applicable to Transporters of Hazardous Waste
40 CFR 264	Standards for Owners and Operators of Hazardous Waste Treatment, Storage, and Disposal Facilities
40 CFR 265	Interim Status Standards for Owners and

	Operators of Hazardous Waste Treatment, Storage, and Disposal Facilities
40 CFR 268	Land Disposal Restrictions
40 CFR 745	Lead-Based Paint Poisoning Prevention in Certain Residential Structures
49 CFR 172	Hazardous Materials Table, Special Provisions, Hazardous Materials Communications, Emergency Response Information, and Training Requirements
49 CFR 178	Specifications for Packagings

UNDERWRITERS LABORATORIES (UL)

UL 586	(2009; Reprint Sep 2014) Standard for High-Efficiency Particulate, Air Filter Units

1.2 DEFINITIONS

1.2.1 Abatement

As applied to target housing and child occupied facilities, "abatement" means any set of measures designed to permanently eliminate lead-based paint hazards in accordance with standards established by appropriate Federal agencies. Such term includes:

a. The removal of lead-based paint and lead-contaminated dust, the permanent containment or encapsulation of lead-based paint, the replacement of lead-painted surfaces or fixtures, and the removal or covering of lead contaminated soil; and

b. All preparation, cleanup, disposal, and post-abatement clearance testing activities associated with such measures.

1.2.2 Action Level

Employee exposure, without regard to use of respirators, to an airborne concentration of lead of 30 micrograms per cubic meter of air averaged over an 8 hour period in a work environment.

1.2.3 Area Sampling

Sampling of lead concentrations within the lead control area and inside the physical boundaries, which is representative of the airborne lead concentrations but is not collected in the breathing zone of personnel.

1.2.4 Child Occupied Facility

A building or portion of a building constructed prior to 1978 visited regularly by the same child, 6 years of age or under, on a least two different days within any week, provided each days visit last at least 3 hours and the combined weekly visit last at least 6 hours and the combined annual visit last at least 60 hours. Child occupied facilities may include, but are not limited to day-care centers, preschools and kindergarten classrooms.

1.2.5 Competent Person (CP)

As used in this section, refers to a person employed by the Contractor who is trained in the recognition and control of lead hazards in accordance with current federal, State, and local regulations. A Certified Industrial Hygienist (CIH) certified for comprehensive practice by the American Board of Industrial Hygiene or a Certified Safety Professional (CSP) certified by the Board of Certified Safety Professionals is the best choice.

1.2.6 Contaminated Room

Refers to a room for removal of contaminated personal protective equipment (PPE).

1.2.7 Decontamination Shower Facility

That facility that encompasses a clean clothing storage room, and a contaminated clothing storage and disposal rooms, with a shower facility in between.

1.2.8 Deleading

Activities conducted by a person who offers to eliminate lead-based paint or lead-based paint hazards or to plan such activities in commercial buildings, bridges or other structures.

1.2.9 Eight-Hour Time Weighted Average (TWA)

Airborne concentration of lead to which an employee is exposed, averaged over an 8 hour workday as indicated in 29 CFR 1926.62.

1.2.10 High Efficiency Particulate Air (HEPA) Filter Equipment

HEPA filtered vacuuming equipment with a UL 586 filter system capable of collecting and retaining lead-contaminated paint dust. A high efficiency particulate filter means 99.97 percent efficient against 0.3 micron or larger size particles.

1.2.11 Lead

Metallic lead, inorganic lead compounds, and organic lead soaps.

1.2.12 Lead-Based Paint (LBP)

Paint or other surface coating that contains lead in excess of 1.0 milligrams per centimeter squared or 0.5 percent by weight.

1.2.13 Lead-Based Paint Activities

In the case of target housing or child occupied facilities, lead-based paint activities include; a lead-based paint inspection, a risk assessment, or abatement of lead-based paint hazards.

1.2.14 Lead-Based Paint Hazard (LBP Hazard)

Any condition that causes exposure to lead from lead-contaminated dust, lead-contaminated soil, lead-based paint that is deteriorated or present in accessible surfaces, friction surfaces, or impact surfaces that would

result in adverse human health effects.

1.2.15 Paint with Lead (PWL)

Any paint that contains lead as determined by the testing laboratory using a valid test method. The requirements of this section does not apply if no detectable levels of lead are found using a quantitative method for analyzing paint using laboratory instruments with specified limits of detection (usually 0.01 percent). An X-Ray Fluorescence (XRF) instrument is not considered a valid test method.

1.2.16 Lead Control Area

A system of control methods to prevent the spread of lead dust, paint chips or debris to adjacent areas that may include temporary containment, floor or ground cover protection, physical boundaries, and warning signs to prevent unauthorized entry of personnel. HEPA filtered local exhaust equipment may be used as engineering controls to further reduce personnel exposures or building/outdoor environmental contamination.

1.2.17 Lead Permissible Exposure Limit (PEL)

Fifty micrograms per cubic meter of air as an 8 hour time weighted average as determined by 29 CFR 1926.62. If an employee is exposed for more than eight hours in a workday, the PEL shall be determined by the following formula:

PEL (micrograms/cubic meter of air) = 400/No. hrs worked per day

1.2.18 Personal Sampling

Sampling of airborne lead concentrations within the breathing zone of an employee to determine the 8 hour time weighted average concentration in accordance with 29 CFR 1926.62. Samples shall be representative of the employees' work tasks. Breathing zone shall be considered an area within a hemisphere, forward of the shoulders, with a radius of 6 to 9 inches and centered at the nose or mouth of an employee.

1.2.19 Physical Boundary

Area physically roped or partitioned off around an enclosed lead control area to limit unauthorized entry of personnel. As used in this section, "inside boundary" shall mean the same as "outside lead control area but inside the physical boundary."

1.2.20 Target Housing

Housing constructed prior to 1978. It does not include housing for the elderly, or persons with disabilities unless any one or more children age 6 years and younger resides or is expected to reside in such housing.

1.3 DESCRIPTION

1.3.1 Description of Work

Remove/control lead-based / paint with lead in good condition, located steel support beams and columns and as indicated on the drawings.

1.3.2 Coordination with Other Work

The contractor shall coordinate with work being performed in adjacent areas. Coordination procedures shall be explained in the Removal/Control Plan and shall describe how the Contractor will prevent lead exposure to other contractors and/or Government personnel performing work unrelated to lead activities.

1.4 SUBMITTALS

Government approval is required for submittals with a "G" designation; submittals not having a "G" designation are for Contractor Quality Control approval. Submit the following in accordance with Section 01 33 00 SUBMITTAL PROCEDURES:

SD-03 Product Data

Vacuum Filters; G
Respirators; G

SD-06 Test Reports

Sampling Results; G
Occupational and Environmental Assessment Data Report; G

SD-07 Certificates

Qualifications of CP; G
Testing Laboratory qualifications; G
lead-based paint/paint with lead removal/control plan including CP approval (signature, date, and certification number); G
Rental equipment notification; G
Respiratory Protection Program; G
Hazard Communication Program; G
State approved hazardous waste treatment, storage, or disposal facility for lead disposal; G
Lead Waste Management Plan; G
Vacuum filters; G

SD-11 Closeout Submittals

Completed and Signed Hazardous Waste Manifest from Treatment or Disposal Facility; G

Certification of Medical Examinations; G

Employee Training Certification; G

1.5 QUALITY ASSURANCE

1.5.1 Qualifications

1.5.1.1 Qualifications of CP

Submit name, address, and telephone number of the CP selected to perform responsibilities specified in paragraph entitled "Competent Person (CP) Responsibilities." Provide previous experience of the CP. Submit proper documentation that the CP is trained and licensed in accordance with

Federal, State, and local laws.

1.5.1.2 Training Certification

Submit a certificate for each employee and supervisor, signed and dated by the training provider meeting 40 CFR 745 (Subpart L) requirements, stating that the employee or supervisor has received the required lead training and is certified to perform or supervise deleading or lead remova. Submit proof the work will be performed by a certified firm.

1.5.1.3 Testing Laboratory

Submit the name, address, and telephone number of the testing laboratory selected to perform the air sampling, testing, and reporting of airborne concentrations of lead. Use a laboratory accredited under the EPA National Lead Laboratory Accreditation Program (NLLAP) by either the American Association for Laboratory Accreditation (A2LA) or the American Industrial Hygiene Association (AIHA) and that is successfully participating in the Environmental Lead Proficiency Analytical Testing (ELPAT) program to perform sample analysis. Laboratories selected to perform blood lead analysis shall be OSHA approved.

1.5.1.4 Third Party Consultant Qualifications

Submit the name, address, and telephone number of the third party consultant selected to perform the wipe sampling for determining concentrations of lead in dust or soil sampling. Submit proper documentation that the consultant is trained and certified as an inspector technician or inspector/risk assessor by the USEPA authorized State (or local) certification and accreditation program.

1.5.2 Requirements

1.5.2.1 Competent Person (CP) Responsibilities

a. Verify training meets all federal, State, and local requirements.

b. Review and approve lead-based paint/paint with lead removal/control plan for conformance to the applicable standards. Ensure work is performed in strict accordance with specifications at all times.

c. Continuously inspect lead-based paint removal/control work for conformance with the approved plan.

d. Perform air and wipe sampling.

e. Control work to prevent hazardous exposure to human beings and to the environment at all times.

f. Certify the conditions of the work as called for elsewhere in this specification.

1.5.2.2 Lead-Based Paint/Paint with Lead Removal/Control Plan (LBP/PWL R/CP)

Submit a detailed job-specific plan of the work procedures to be used in the removal/control of LBP/PWL. The plan shall include a sketch showing the location, size, and details of lead control areas, location and

details of decontamination facilities, viewing ports, and mechanical ventilation system. Include a description of equipment and materials, controls and job responsibilities for each activity from which lead is emitted. Include in the plan, eating, drinking, smoking and sanitary procedures, interface of trades, sequencing of lead related work, collected waste water and paint debris disposal plan, air sampling plan, respirators, personal protective equipment, and a detailed description of the method of containment of the operation to ensure that lead is not released outside the lead control area. Include site preparation, cleanup and clearance procedures. Include occupational and environmental sampling, training, sampling methodology, frequency, duration of sampling, and qualifications of sampling personnel in the air sampling portion of the plan. Include a description of arrangements made among contractors on multi-contractor worksites to inform affected employees and to clarify responsibilities to control exposures.

1.5.2.3 Occupational and Environmental Assessment Data Report

If initial monitoring is necessary, submit occupational and environmental sampling results to the Contracting Officer within three working days of collection, signed by the testing laboratory employee performing the analysis, the employee that performed the sampling, and the CP.

a. The initial monitoring shall represent each job classification, or if working conditions are similar to previous jobs by the same employer, provide previously collected exposure data that can be used to estimate worker exposures per 29 CFR 1926.62. The data shall represent the worker's regular daily exposure to lead for stated work.

b. Submit worker exposure data gathered during the task based trigger operations of 29 CFR 1926.62 with a complete process description. This includes manual demolition, manual scraping, manual sanding, heat gun, power tool cleaning, rivet busting, cleanup of dry expendable abrasives, abrasive blast enclosure removal, abrasive blasting, welding, cutting and torch burning where lead containing coatings are present.

c. The initial assessment shall determine the requirement for further monitoring and the need to fully implement the control and protective requirements including the lead compliance plan per 29 CFR 1926.62.

1.5.2.4 Medical Examinations

Initial medical surveillance as required by 29 CFR 1926.62 shall be made available to all employees exposed to lead at any time (1 day) above the action level. Full medical surveillance shall be made available to all employees on an annual basis who are or may be exposed to lead in excess of the action level for more than 30 days a year or as required by 29 CFR 1926.62. Adequate records shall show that employees meet the medical surveillance requirements of 29 CFR 1926.33, 29 CFR 1926.62, and 29 CFR 1926.103. Maintain complete and accurate medical records of employees for a period of at least 30 years or for the duration of employment plus 30 years, whichever is longer.

1.5.2.5 Training

Train each employee performing paint removal, disposal, and air sampling operations prior to the time of initial job assignment and annually thereafter, in accordance with 29 CFR 1926.21, 29 CFR 1926.62, and State

and local regulations where appropriate.

1.5.2.6 Respiratory Protection Program

a. Provide each employee required to wear a respirator a respirator fit test at the time of initial fitting and at least annually thereafter as required by 29 CFR 1926.62.

b. Establish and implement a respiratory protection program as required by AIHA Z88.6, 29 CFR 1926.103, 29 CFR 1926.62, and 29 CFR 1926.55.

1.5.2.7 Hazard Communication Program

Establish and implement a Hazard Communication Program as required by 29 CFR 1926.59.

1.5.2.8 Lead Waste Management

The Lead Waste Management Plan shall comply with applicable requirements of federal, State, and local hazardous waste regulations and address:

a. Identification and classification of hazardous wastes associated with the work.

b. Estimated quantities of wastes to be generated and disposed of.

c. Names and qualifications of each contractor that will be transporting, storing, treating, and disposing of the wastes. Include the facility location and a 24-hour point of contact. Furnish two copies of proof of EPA hazardous waste permitsEPA Identification numbers.

d. Names and qualifications (experience and training) of personnel who will be working on-site with hazardous wastes.

e. List of waste handling equipment to be used in performing the work, to include cleaning, volume reduction, and transport equipment.

f. Spill prevention, containment, and cleanup contingency measures including a health and safety plan to be implemented in accordance with 29 CFR 1926.65.

g. Work plan and schedule for waste containment, removal and disposal. Wastes shall be cleaned up and containerized daily. Proper containment of the waste includes using acceptable waste containers (e.g., 55-gallon drums) as well as proper marking/labeling of the containers.

h. Unit cost for waste disposal according to this plan.

1.5.2.9 Environmental, Safety and Health Compliance

In addition to the detailed requirements of this specification, comply with laws, ordinances, rules, and regulations of Federal, State, and local authorities regarding removing, handling, storing, transporting, and disposing of lead waste materials. Comply with the applicable requirements of the current issue of 29 CFR 1926.62. Submit matters regarding interpretation of standards to the Contracting Officer for resolution before starting work. Where specification requirements and the referenced

documents vary, the most stringent requirement shall apply. The following State laws, ordinances, criteria, rules and regulations regarding removing, handling, storing, transporting, and disposing of lead-contaminated materials apply:

a. NCGS Chapter 130A Article 19A

1.5.3 Pre-Construction Conference

Along with the CP, meet with the Contracting Officer to discuss in detail the lead waste management plan and the lead-based paint/paint with lead removal/control plan, including work procedures and precautions for the removal plan.

1.6 EQUIPMENT

1.6.1 Respirators

Furnish appropriate respirators approved by the National Institute for Occupational Safety and Health (NIOSH), Department of Health and Human Services, for use in atmospheres containing lead dust. Respirators shall comply with the requirements of 29 CFR 1926.62.

1.6.2 Special Protective Clothing

Furnish personnel who will be exposed to lead-contaminated dust with proper disposable protective whole body clothing, head covering, gloves, and foot coverings as required by 29 CFR 1926.62. Furnish proper disposable plastic or rubber gloves to protect hands. Reduce the level of protection only after obtaining approval from the CP.

1.6.3 Rental Equipment Notification

If rental equipment is to be used during lead-based paint handling and disposal, notify the rental agency in writing concerning the intended use of the equipment. Furnish a copy of the written notification to the Contracting Officer.

1.6.4 Vacuum Filters

UL 586 labeled HEPA filters.

1.6.5 Equipment for Government Personnel

Furnish the Contracting Officer with one complete sets of personal protective equipment (PPE) daily, as required herein, for entry into and inspection of the paint removal work within the lead controlled area. Personal protective equipment shall include disposable whole body covering, including appropriate foot, head, and hand protection. PPE shall remain the property of the Contractor. The Government will provide respiratory protection for the Contracting Officer.

1.7 PROJECT/SITE CONDITIONS

1.7.1 Protection of Existing Work to Remain

Perform paint removal work without damage or contamination of adjacent areas. Where existing work is damaged or contaminated, restore work to its original condition or better.

PART 2 PRODUCTS

Section 01 35 26 GOVERNMENTAL SAFETY REQUIREMENTS.

PART 3 EXECUTION

3.1 PREPARATION

3.1.1 Protection

3.1.1.1 Notification

a. Notify the Contracting Officer 20 days prior to the start of any paint removal work.

c. Notification of the Commencement of Hazard Abatement

3.1.1.2 Boundary Requirements

a. Provide physical boundaries around the lead control area by roping off the area designated in the work plan or providing curtains, portable partitions or other enclosures to ensure that lead will not escape outside the lead control area.

b. Warning Signs - Provide warning signs at approaches to lead control areas. Locate signs at such a distance that personnel may read the sign and take the necessary precautions before entering the area. Signs shall comply with the requirements of 29 CFR 1926.62.

3.1.1.3 Heating, Ventilating and Air Conditioning (HVAC) Systems

Shut down, lock out, and isolate HVAC systems that supply, exhaust, or pass through the lead control areas. Seal intake and exhaust vents in the lead control area with 6 mil plastic sheet and tape. Seal seams in HVAC components that pass through the lead control area.

3.1.1.4 Decontamination Shower Facility

Provide clean and contaminated change rooms and shower facilities in accordance with this specification and 29 CFR 1926.62.

3.1.1.5 Eye Wash Station

Where eyes may be exposed to injurious corrosive materials, suitable facilities for quick drenching or flushing of the eyes shall be provided within the work area.

3.1.1.6 Mechanical Ventilation System

a. Use adequate ventilation to control personnel exposure to lead in accordance with 29 CFR 1926.62.

b. To the extent feasible, use local exhaust ventilation connected to HEPA filters or other collection systems, approved by the CP. Local exhaust ventilation systems shall be evaluated and maintained in accordance with 29 CFR 1926.62.

c. Vent local exhaust outside the building only and away from building

ventilation intakes.

d. Use locally exhausted, power actuated, paint removal tools.

3.1.1.7 Personnel Protection

Personnel shall wear and use protective clothing and equipment as specified herein. Eating, smoking, or drinking or application of cosmetics is not permitted in the lead control area. No one will be permitted in the lead control area unless they have been appropriately trained and provided with protective equipment.

3.2 ERECTION

3.2.1 Lead Control Area Requirements

Establish a lead control area by situating critical barriers and physical boundaries around the area or structure where LBP/PWL removal/control operations will be performed.

3.3 APPLICATION

3.3.1 Work Procedures

Perform removal of lead-based paint in accordance with approved lead-based paint/paint with lead removal/control plan. Use procedures and equipment required to limit occupational and environmental exposure to lead when lead-based paint is removed in accordance with 29 CFR 1926.62. Dispose of removed paint chips and associated waste in compliance with Environmental Protection Agency (EPA), State, and local requirements.

3.3.2 Lead-Based Paint Removal/Control/Deleading

Manual or power sanding of interior and exterior surfaces is not permitted unless tools are equipped with HEPA attachments or wet methods. The dry sanding or grinding of surfaces that contain lead is prohibited] Provide methodology for LBP removal/control in work plan. Remove paint within the areas designated on the drawings in order to completely expose the substrate. Take whatever precautions necessary to minimize damage to the underlying substrate.

Provide methodology for LBP/PWL removal and processes to minimize contamination of work areas outside the control area with lead-contaminated dust or other lead-contaminated debris/waste and to ensure that unprotected personnel are not exposed to hazardous concentrations of lead. Describe this LBP/PWL removal/control process in the LBP/PWL R/CP.

3.3.2.1 Indoor Paint Removal

Perform manualor paint removal in lead control areas using enclosures, barriers, or containments. Collect residue debris for disposal in accordance with federal, State, and local requirements.

3.3.2.2 Outdoor Paint Removal

Perform outdoor removal as indicated in federal, State, and local regulations and in the LBP/CPR/CP. The worksite preparation (barriers or

containments) shall be job dependent and presented in the LBP/PWL R/CP.

3.3.3 Personnel Exiting Procedures

Whenever personnel exit the lead-controlled area, they shall perform the following procedures and shall not leave the work place wearing any clothing or equipment worn during the work day:

a. Vacuum themselves off.

b. Remove protective clothing in the contaminated change room, and place them in an approved impermeable disposal bag.

c. Change to clean clothes prior to leaving the physical boundary designated around the lead control area.

3.4 FIELD QUALITY CONTROL

3.4.1 Tests

3.4.1.1 Air and Wipe Sampling

Air sample for lead in accordance with 29 CFR 1926.62 and as specified herein. Air and wipe sampling shall be directed or performed by the CP.

a. The CP shall be on the job site directing the air and non-clearance wipe sampling and inspecting the lead-based paint removal/control work to ensure that the requirements of the contract have been satisfied during the entire lead-based paint removal operation.

b. Collect personal air samples on employees who are expected to have the greatest risk of exposure as determined by the CP. In addition, collect air samples on at least 25 percent of the work crew or a minimum of two employees, whichever is greater, during each work shift.

c. Submit results of air samples, within 72 hours after the air samples are taken.

3.4.1.2 Air Sampling During Paint Removal Work

Conduct area air sampling daily, on each shift in which lead-based paint removal operations are performed, in areas immediately adjacent to the lead control area. Sufficient area monitoring shall be conducted to ensure unprotected personnel are not exposed at or above 30 micrograms per cubic meter of air. If 30 micrograms per cubic meter of air is reached or exceeded, stop work, correct the conditions(s) causing the increased levels. Notify the Contracting Officer immediately. Determine if condition(s) require any further change in work methods. Removal work shall resume only after the CP and the Contracting Officer give approval. For outdoor operations, at least one sample on each shift shall be taken on the downwind side of the lead control area.

3.4.1.3 Sampling After Paint Removal/Control

After the visual inspection, collect wipe samples according to the HUD protocol contained in HUD 6780 to determine the lead content of settled dust and dirt in micrograms per square meter foot of surface area .

3.5 CLEANING AND DISPOSAL

3.5.1 Cleanup

Maintain surfaces of the lead control area free of accumulations of paint chips and dust. Restrict the spread of dust and debris; keep waste from being distributed over the work area. Do not dry sweep or use compressed air to clean up the area. At the end of each shift and when the paint removal operation has been completed, clean the area of visible lead paint contamination by vacuuming with a HEPA filtered vacuum cleaner, wet mopping the area and wet wiping the area as indicated by the CP. Reclean areas showing dust or residual paint chips or debris. After visible dust, chips and debris is removed, wet wipe and HEPA vacuum all surfaces in the work area. If adjacent areas become contaminated at any time during the work, clean, visually inspect, and then wipe sample all contaminated areas. The CP shall then certify in writing that the area has been cleaned of lead contamination before restarting work.

3.5.1.1 Clearance Certification

The CP shall certify in writing that air samples collected outside the lead control area during paint removal operations are less than 30 micrograms per cubic meter of air; the respiratory protection used for the employees was adequate; the work procedures were performed in accordance with 29 CFR 1926.62 and 40 CFR 745; and that there were no visible accumulations of material and dust containing lead left in the work site. Do not remove the lead control area or roped off boundary and warning signs prior to the Contracting Officer's acknowledgement of receipt of the CP certification.

3.5.2 Disposal

a. Collect lead-contaminated waste, scrap, debris, bags, containers, equipment, and lead-contaminated clothing that may produce airborne concentrations of lead particles. Label the containers in accordance with 29 CFR 1926.62 and 40 CFR 262. Dispose of lead-contaminated waste material at an EPA or State approved hazardous waste treatment, storage, or disposal facility off Government property.

b. Place waste materials in U.S. Department of Transportation (49 CFR 178) approved 55 gallon drums. Properly label each drum to identify the type of waste (49 CFR 172) and the date the drum was filled. For hazardous waste, the collection drum requires marking/labeling in accordance with 40 CFR 262 during the accumulation/collection timeframe. The Contracting Officer or an authorized representative will assign an area for interim storage of waste-containing drums. Do not store hazardous waste drums in interim storage longer than 90 calendar days from the date affixed to each drum.

c. Handle, transport, and dispose lead or lead-contaminated material classified as hazardous waste in accordance with 40 CFR 260, 40 CFR 261, 40 CFR 262, 40 CFR 263, 40 CFR 264, and 40 CFR 265. Comply with land disposal restriction notification requirements as required by 40 CFR 268.

d. All material, whether hazardous or non-hazardous shall be disposed in accordance with laws and provisions and Federal, State, or local

regulations. Ensure waste is properly characterized. The result of each waste characterization (TCLP for RCRA materials) will dictate disposal requirements.

3.5.2.1 Disposal Documentation

Submit written evidence to demonstrate the hazardous waste treatment, storage, or disposal facility (TSD) is approved for lead disposal by the EPA, State or local regulatory agencies. Submit one copy of the completed hazardous waste manifest, signed and dated by the initial transporter in accordance with 40 CFR 262. Contractor shall provide a certificate that the waste was accepted by the disposal facility.

3.5.3 Payment for Hazardous Waste

Payment for disposal of hazardous and non-hazardous waste will not be made until a signed copy of the manifest from the treatment or disposal facility certifying the amount of lead-containing materials or non-hazardous waste delivered is returned and a copy is furnished to the Government.

-- End of Section --

SECTION 03 30 00

CAST-IN-PLACE CONCRETE
05/14

PART 1 GENERAL

1.1 REFERENCES

The publications listed below form a part of this specification to the extent referenced. The publications are referred to within the text by the basic designation only.

AMERICAN CONCRETE INSTITUTE INTERNATIONAL (ACI)

ACI 117	(2010; Errata 2011) Specifications for Tolerances for Concrete Construction and Materials and Commentary
ACI 211.1	(1991; R 2009) Standard Practice for Selecting Proportions for Normal, Heavyweight and Mass Concrete
ACI 211.2	(1998; R 2004) Standard Practice for Selecting Proportions for Structural Lightweight Concrete
ACI 301	(2010; ERTA 2015) Specifications for Structural Concrete
ACI 302.1R	(2015) Guide for Concrete Floor and Slab Construction
ACI 304.2R	(1996; R 2008) Placing Concrete by Pumping Methods
ACI 304R	(2000; R 2009) Guide for Measuring, Mixing, Transporting, and Placing Concrete
ACI 305R	(2010) Guide to Hot Weather Concreting
ACI 306.1	(1990; R 2002) Standard Specification for Cold Weather Concreting
ACI 306R	(2010) Guide to Cold Weather Concreting
ACI 308.1	(2011) Specification for Curing Concrete
ACI 318	(2014; Errata 1-2 2014; Errata 3-4 2015) Building Code Requirements for Structural Concrete and Commentary
ACI 347	(2004; Errata 2008; Errata 2012) Guide to Formwork for Concrete
ACI SP-2	(2007; Abstract: 10th Edition) ACI Manual of Concrete Inspection

ACI SP-66	(2004) ACI Detailing Manual

AMERICAN HARDBOARD ASSOCIATION (AHA)

AHA A135.4	(1995; R 2004) Basic Hardboard

ASTM INTERNATIONAL (ASTM)

ASTM A1064/A1064M	(2015) Standard Specification for Carbon-Steel Wire and Welded Wire Reinforcement, Plain and Deformed, for Concrete
ASTM A615/A615M	(2015a; E 2015) Standard Specification for Deformed and Plain Carbon-Steel Bars for Concrete Reinforcement
ASTM A934/A934M	(2013) Standard Specification for Epoxy-Coated Prefabricated Steel Reinforcing Bars
ASTM C1017/C1017M	(2013; E 2015) Standard Specification for Chemical Admixtures for Use in Producing Flowing Concrete
ASTM C1077	(2015) Standard Practice for Laboratories Testing Concrete and Concrete Aggregates for Use in Construction and Criteria for Laboratory Evaluation
ASTM C1107/C1107M	(2014a) Standard Specification for Packaged Dry, Hydraulic-Cement Grout (Nonshrink)
ASTM C143/C143M	(2012) Standard Test Method for Slump of Hydraulic-Cement Concrete
ASTM C150/C150M	(2015) Standard Specification for Portland Cement
ASTM C1602/C1602M	(2012) Standard Specification for Mixing Water Used in Production of Hydraulic Cement Concrete
ASTM C172/C172M	(2014a) Standard Practice for Sampling Freshly Mixed Concrete
ASTM C260/C260M	(2010a) Standard Specification for Air-Entraining Admixtures for Concrete
ASTM C31/C31M	(2012) Standard Practice for Making and Curing Concrete Test Specimens in the Field
ASTM C33/C33M	(2013) Standard Specification for Concrete Aggregates
ASTM C39/C39M	(2015a) Standard Test Method for Compressive Strength of Cylindrical Concrete Specimens

ASTM C42/C42M	(2013) Standard Test Method for Obtaining and Testing Drilled Cores and Sawed Beams of Concrete
ASTM C494/C494M	(2015a) Standard Specification for Chemical Admixtures for Concrete
ASTM C618	(2012a) Standard Specification for Coal Fly Ash and Raw or Calcined Natural Pozzolan for Use in Concrete
ASTM C94/C94M	(2015) Standard Specification for Ready-Mixed Concrete
ASTM C989/C989M	(2014) Standard Specification for Slag Cement for Use in Concrete and Mortars
ASTM D412	(2006a; R 2013) Standard Test Methods for Vulcanized Rubber and Thermoplastic Elastomers - Tension
ASTM D471	(2015a) Standard Test Method for Rubber Property - Effect of Liquids
ASTM E329	(2014a) Standard Specification for Agencies Engaged in the Testing and/or Inspection of Materials Used in Construction

CONCRETE REINFORCING STEEL INSTITUTE (CRSI)

CRSI 10MSP	(2009; 28th Ed) Manual of Standard Practice

NATIONAL INSTITUTE OF STANDARDS AND TECHNOLOGY (NIST)

NIST PS 1	(2009) DOC Voluntary Product Standard PS 1-07, Structural Plywood

U.S. ARMY CORPS OF ENGINEERS (USACE)

COE CRD-C 513	(1974) Corps of Engineers Specifications for Rubber Waterstops
COE CRD-C 572	(1974) Corps of Engineers Specifications for Polyvinylchloride Waterstops

1.2 DEFINITIONS

a. "Cementitious material" as used herein must include all portland cement, pozzolan, fly ash, and ground granulated blast-furnace slag.

b. "Chemical admixtures" are materials in the form of powder or fluids that are added to the concrete to give it certain characteristics not obtainable with plain concrete mixes.

c. "Supplementary cementing materials" (SCM) include coal fly ash, granulated blast-furnace slag, natural or calcined pozzolans, and ultra-fine coal ash when used in such proportions to replace the

portland cement that result in improvement to sustainability and durability and reduced cost.

d. "Design strength" (f'c) is the specified compressive strength of concrete at time(s) specified in this section to meet structural design criteria.

e. "Mixture proportioning" is the process of designing concrete mixture proportions to enable it to meet the strength, service life and constructability requirements of the project while minimizing the initial and life-cycle cost.

f. "Mixture proportions" are the masses or volumes of individual ingredients used to make a unit measure (cubic meter or cubic yard) of concrete.

g. "Pozzolan" is a siliceous or siliceous and aluminous material, which in itself possesses little or no cementitious value but will, in finely divided form and in the presence of moisture, chemically react with calcium hydroxide at ordinary temperatures to form compounds possessing cementitious properties.

h. "Workability (or consistence)" is the ability of a fresh (plastic) concrete mix to fill the form/mould properly with the desired work (vibration) and without reducing the concrete's quality. Workability depends on water content, chemical admixtures, aggregate (shape and size distribution), cementitious content and age (level of hydration).

1.3 SUBMITTALS

Government approval is required for submittals with a "G" designation; submittals not having a "G" designation are for Contractor Quality Control approval. Submit the following in accordance with Section 01 33 00 SUBMITTAL PROCEDURES:

SD-02 Shop Drawings

Concrete Infill Walls; G

SD-03 Product Data

Cementitious Materials; G
Reinforcement; G
Admixtures; G

SD-05 Design Data

Concrete Mix Design; G

SD-06 Test Reports

Concrete Mix Design; G
Compressive Strength Tests; G
Air Content
Slump Tests

SD-07 Certificates

Reinforcing Bars
Material Safety Data Sheets
Field Testing Technician and Testing Agency

1.4 MODIFICATION OF REFERENCES

Accomplish work in accordance with ACI publications except as modified herein. Consider the advisory or recommended provisions to be mandatory. Interpret reference to the "Building Official," the "Structural Engineer," and the "Architect/Engineer" to mean the Contracting Officer.

1.5 DELIVERY, STORAGE, AND HANDLING

Follow ACI 301, ACI 304R and ASTM A934/A934M requirements and recommendations. Do not deliver concrete until vapor retarder, forms, reinforcement, embedded items, and chamfer strips are in place and ready for concrete placement. Do not store concrete curing compounds or sealers with materials that have a high capacity to adsorb volatile organic compound (VOC) emissions. Do not store concrete curing compounds or sealers in occupied spaces.

1.5.1 Reinforcement

Store reinforcement of different sizes and shapes in separate piles or racks raised above the ground to avoid excessive rusting. Protect from contaminants such as grease, oil, and dirt. Ensure bar sizes can be accurately identified after bundles are broken and tags removed.

1.6 QUALITY ASSURANCE

1.6.1 Design Data

1.6.1.1 Concrete Mix Design

Sixty days minimum prior to concrete placement, submit a mix design for each strength and type of concrete. Submit a complete list of materials including type; brand; source and amount of cement, complementary cementitious materials, and admixtures; and applicable reference specifications. Submit mill test and all other test for cement, complementary cementitious materials, aggregates, and admixtures.

1.6.2 Mock-Up Concrete Infill Walls

After material samples are approved construct one section of infill wall for COR approval. Provide detail drawings at pits selaed and signed by Contractor's designated professional engineer.

1.6.2.1 Concrete Mock-Up Panel Purpose

The completed panel is used as the standard of workmanship for the type of concrete wall represented. Do not commence work until the mock-up panel has been completed and approved.

1.6.3 Control Submittals

1.6.3.1 Material Safety Data Sheets

Submit Material Safety Data Sheets (MSDS) for all materials that are regulated for hazardous health effects. MSDS must be readily accessible during each work shift to employees when they are at the construction site.

1.6.4 Test Reports

1.6.4.1 Fly Ash and Pozzolan

Submit test results in accordance with ASTM C618 for fly ash and pozzolan. Submit test results performed within 6 months of submittal date.

1.6.4.2 Ground Granulated Blast-Furnace Slag

Submit test results in accordance with ASTM C989/C989M for ground granulated blast-furnace slag. Submit test results performed within 6 months of submittal date.

1.6.5 Field Testing Technician and Testing Agency

Submit data on qualifications prior to performing testing on concrete.

a. Work on concrete under this contract must be performed by an ACI Concrete Field Testing Technician Grade 1 qualified in accordance with ACI SP-2 or equivalent. Equivalent certification programs must include requirements for written and performance examinations as stipulated in ACI SP-2.

b. Testing agencies that perform testing services on reinforcing steel must meet the requirements of ASTM E329.

c. Testing agencies that perform testing services on concrete materials must meet the requirements of ASTM C1077.

1.6.6 Laboratory Qualifications for Concrete Qualification Testing

The concrete testing laboratory must have the necessary equipment and experience to accomplish required testing. The laboratory must meet the requirements of ASTM C1077 and be Cement and Concrete Reference Laboratory (CCRL) inspected.

PART 2 PRODUCTS

2.1 MATERIALS FOR FORMS

Provide wood, plywood or plastic.

2.1.1 Wood Forms

Use lumber as follows. Provide lumber that is square edged or tongue-and-groove boards, free of raised grain, knotholes, or other surface defects. Provide plywood that complies with NIST PS 1, B-B concrete form panels or better or AHA A135.4, hardboard for smooth form lining.

2.1.1.1 Concrete Form Plywood (Standard Rough)

Provide plywood that conforms to NIST PS 1, B-B, concrete form, not less than 5/8-inch thick.

2.2 FORM TIES AND ACCESSORIES

Provide a form tie system that does not leave mild steel after break-off or removal any closer than 2 inches from the exposed surface. Do not use wire alone. Form ties and accessories must not reduce the effective cover of the reinforcement.

2.2.1 Waterstops

2.2.1.1 PVC Waterstop

Polyvinylchloride waterstops must conform to COE CRD-C 572.

2.2.1.2 Rubber Waterstop

Rubber waterstops must conform to COE CRD-C 513.

2.2.1.3 Thermoplastic Elastomeric Rubber Waterstop

Thermoplastic elastomeric rubber waterstops must conform to ASTM D471.

2.2.1.4 Hydrophilic Waterstop

Swellable strip type compound of polymer modified chloroprene rubber that swells upon contact with water must conform to ASTM D412 as follows: Tensile strength 420 psi minimum; ultimate elongation 600 percent minimum. Hardness must be 50 minimum on the type A durometer and the volumetric expansion ratio in distilled water at 70 degrees F must be 3 to 1 minimum.

2.3 CONCRETE MIX DESIGN

2.3.1 Contractor-Furnished Mix Design

ACI 211.1, ACI 301, and ACI 318 and ACI 211.2 ACI 304.2R except as otherwise specified. Indicate the compressive strength (f'c) of the concrete for each portion of the structure(s) as specified below.

2.3.1.1 Footings

Proportion normal-weight concrete mixture as follows:

a. Minimum Compressive Strength: As indicated on the Drawings.

b. Maximum Water-Cementitious Materials Ratio: 0.50.

c. Slump Limit: 8 inches for concrete with verified slump of 2 to 4 inches before adding high-range water-reducing admixture or plasticizing admixture , plus or minus 1 inch.

d. Air Content: 5.5 percent, plus or minus 1.5 percent at point of delivery for 1-1/2 inch nominal maximum aggregate size.

2.3.1.2 Required Average Strength of Mix Design

The selected mixture must produce an average compressive strength exceeding the specified strength by the amount indicated in ACI 301. When a concrete production facility has a record of at least 15 consecutive tests, the standard deviation must be calculated and the required average compressive strength must be determined in accordance with ACI 301.

2.3.2 Ready-Mix Concrete

Provide concrete that meets the requirements of ASTM C94/C94M.

2.3.3 Concrete Curing Materials

Provide concrete curing material in accordance with ACI 301 Section 5 and ACI 308.1 Section 2.

2.4 MATERIALS

2.4.1 Cementitious Materials

Use one manufacturer and one source for each type of cement, ground slag, fly ash, and pozzolan.

2.4.1.1 Fly Ash

ASTM C618, Class F, except that the maximum allowable loss on ignition must not exceed 3 percent.

2.4.1.2 Ground Granulated Blast-Furnace Slag

ASTM C989/C989M, Grade 100 or Grade 120.

2.4.1.3 Portland Cement

Provide cement that conforms to ASTM C150/C150M, Type I, II, or I/II. Use one brand and type of cement.

2.4.2 Water

Water must comply with the requirements of ASTM C1602/C1602M. Minimize the amount of water in the mix. Improve workability by adjusting the grading rather than by adding water. Water must be potable; free from injurious amounts of oils, acids, alkalis, salts, organic materials, or other substances deleterious to concrete.

2.4.3 Aggregates

ASTM C33/C33M.

2.4.4 Nonshrink Grout

ASTM C1107/C1107M.

2.4.5 Admixtures

ASTM C494/C494M: Type A, water reducing; Type B, retarding; Type C, accelerating; Type D, water-reducing and retarding; and Type E, water-reducing and accelerating admixture. Do not use calcium chloride

admixtures. Submit product data for admixtures used in concrete.

2.4.5.1 Air-Entraining

ASTM C260/C260M.

2.4.5.2 High Range Water Reducer (HRWR) (Superplasticizers)

ASTM C494/C494M, Type F and Type G (HRWR retarding admixture) and ASTM C1017/C1017M.

2.5 REINFORCEMENT

2.5.1 Reinforcing Bars

ACI 301. Use deformed steel. ASTM A615/A615M with the bars marked A, Grade 60.

2.5.2 Wire

2.5.2.1 Welded Wire Reinforcement

ASTM A1064/A1064M. Provide flat sheets of welded wire reinforcement for slabs and toppings.

2.5.2.2 Steel Wire

Wire must conform to ASTM A1064/A1064M.

2.5.3 Reinforcing Bar Supports

Supports include bolsters, chairs, spacers, and other devices necessary for proper spacing, supporting, and fastening reinforcing bars and welded wire reinforcement in place.

Provide wire bar type supports of coated or non-corrodible material conforming to ACI SP-66 and CRSI 10MSP.

Legs of supports in contact with formwork must be hot-dip galvanized, or plastic coated after fabrication, or stainless-steel bar supports.

PART 3 EXECUTION

3.1 EXAMINATION

Do not begin installation until substrates have been properly constructed; verify that substrates are level.

If substrate preparation is the responsibility of another installer, notify Contracting Officer of unsatisfactory preparation before processing.

Check field dimensions before beginning installation. If dimensions vary too much from design dimensions for proper installation, notify Contracting Officer and wait for instructions before beginning installation.

3.2 PREPARATION

Determine quantity of concrete needed and minimize the production of

excess concrete. Designate locations or uses for potential excess concrete before the concrete is poured.

3.2.1 General

Surfaces against which concrete is to be placed must be free of debris, loose material, standing water, snow, ice, and other deleterious substances before start of concrete placing.

Remove standing water without washing over freshly deposited concrete. Divert flow of water through side drains provided for such purpose.

3.2.2 Reinforcement and Other Embedded Items

Secure reinforcement, joint materials, and other embedded materials in position, inspected, and approved before start of concrete placing.

3.3 FORMS

Provide forms, shoring, and scaffolding for concrete placement in accordance with ACI 301 Section 2 and 5 and ACI 347. Set forms mortar-tight and true to line and grade.

3.3.1 Coating

Before concrete placement, coat the contact surfaces of forms with a form release agent.

3.3.2 Forms for Standard Rough Form Finish

Provide formwork in accordance with ACI 301 Section 5 with a surface finish, SF-1.0, for formed surfaces that are to be concealed by other construction.

3.3.3 Form Ties

Provide ties in accordance with ACI 301 section 2.

3.3.4 Tolerances for Form Construction

Construct formwork to ensure that after removal of forms and prior to patching and finishing of formed surfaces, provide concrete surfaces in accordance with tolerances specified in ACI 301 Section 5 and ACI 117.

3.3.5 Removal of Forms and Supports

After placing concrete, removal of forms must be in accordance with ACI 301 Section 2.

3.4 PLACING REINFORCEMENT AND MISCELLANEOUS MATERIALS

ACI 301 and ACI SP-66. Provide bars, welded wire reinforcement, wire ties, supports, and other devices necessary to install and secure reinforcement. Reinforcement must not have rust, scale, oil, grease, clay, or foreign substances that would reduce the bond. Rusting of reinforcement is a basis of rejection if the effective cross-sectional area or the nominal weight per unit length has been reduced. Remove loose rust prior to placing steel. Tack welding is prohibited.

3.4.1 General

Provide details of reinforcement that are in accordance with ACI 301 and ACI SP-66 and as specified.

3.4.2 Reinforcement Supports

Support reinforcement in accordance with ACI 301 Section 3. Supports for coated or galvanized bars must also be coated with electrically compatible material for a distance of at least 2 inches beyond the point of contact with the bars.

3.4.3 Fabrication

Shop fabricate reinforcing bars to conform to shapes and dimensions indicated for reinforcement, and as follows:

Provide fabrication tolerances that are in accordance with ACI 318 and ACI SP-66.

Provide hooks and bends that are in accordance with ACI 318 and ACI SP-66.

Reinforcement must be bent cold to shapes as indicated. Bending must be done in the shop. Rebending of a reinforcing bar that has been bent incorrectly is not be permitted. Bending must be in accordance with standard approved practice and by approved machine methods.

Tolerance on nominally square-cut, reinforcing bar ends must be in accordance with ACI SP-66.

Deliver reinforcing bars bundled, tagged, and marked. Tags must be metal with bar size, length, mark, and other information pressed in by machine. Marks must correspond with those used on the placing drawings.

Do not use reinforcement that has any of the following defects:

a. Bar lengths, depths, and bends beyond specified fabrication tolerances

b. Bends or kinks not indicated on drawings or approved shop drawings

c. Bars with reduced cross-section due to rusting or other cause

Replace defective reinforcement with new reinforcement having required shape, form, and cross-section area.

3.4.4 Placing Reinforcement

Place reinforcement in accordance with ACI 301 and ACI SP-66.

Equip supports on ground and similar surfaces with sand-plates.

Support welded wire reinforcement as required for reinforcing bars.

Secure reinforcements to supports by means of tie wire. Wire must be black, soft iron wire, not less than 16 gage.

Reinforcement must be accurately placed, securely tied at intersections, and held in position during placing of concrete by spacers, chairs, or other approved supports. Point wire-tie ends away from the form.

Unless otherwise indicated, numbers, type, and spacing of supports must conform to ACI SP-66.

Bending of reinforcing bars partially embedded in concrete is permitted only as specified in ACI SP-66 and ACI 318.

3.4.5 Spacing of Reinforcing Bars

Spacing must be as indicated. If not indicated, spacing must be in accordance with the ACI 318 and ACI SP-66.

3.4.6 Concrete Protection for Reinforcement

Concrete protection must be in accordance with the ACI 318 and ACI SP-66.

3.5 BATCHING, MEASURING, MIXING, AND TRANSPORTING CONCRETE

ASTM C94/C94M, ACI 301, ACI 302.1R and ACI 304R.

3.5.1 Measuring

Make measurements at intervals as specified in paragraphs SAMPLING and TESTING.

3.5.2 Mixing

ASTM C94/C94M, ACI 301 and ACI 304R.

3.5.3 Transporting

Transport concrete from the mixer to the forms as rapidly as practicable. Prevent segregation or loss of ingredients. Clean transporting equipment thoroughly before each batch. Do not use aluminum pipe or chutes. Remove concrete which has segregated in transporting and dispose of as directed.

3.6 PLACING CONCRETE

Place concrete in accordance with ACI 301 Section 5.

3.6.1 Cold Weather

ACI 306.1. Do not allow concrete temperature to decrease below 50 degrees F. Obtain approval prior to placing concrete when the ambient temperature is below 40 degrees F or when concrete is likely to be subjected to freezing temperatures within 24 hours. Cover concrete and provide sufficient heat to maintain 50 degrees F minimum adjacent to both the formwork and the structure while curing. Limit the rate of cooling to 37 degrees F in any 1 hour and 50 degrees F per 24 hours after heat application.

3.6.2 Hot Weather

Maintain required concrete temperature using Figure 4.2 in ACI 305R to prevent the evaporation rate from exceeding 0.2 pound of water per square foot of exposed concrete per hour. Cool ingredients before mixing or use other suitable means to control concrete temperature and prevent rapid drying of newly placed concrete. Shade the fresh concrete as soon as possible after placing. Start curing when the surface of the fresh concrete is sufficiently hard to permit curing without damage. Provide

water hoses, pipes, spraying equipment, and water hauling equipment, where job site is remote to water source, to maintain a moist concrete surface throughout the curing period. Provide burlap cover or other suitable, permeable material with fog spray or continuous wetting of the concrete when weather conditions prevent the use of either liquid membrane curing compound or impervious sheets. For vertical surfaces, protect forms from direct sunlight and add water to top of structure once concrete is set.

3.7 WASTE MANAGEMENT

Provide as specified in the Waste Management Plan and as follows.

3.7.1 Other Waste

Identify concrete manufacturer's or supplier's policy for collection or return of construction waste, unused material, deconstruction waste, and/or packaging material.

3.8 SURFACE FINISHES EXCEPT FLOOR, SLAB, AND PAVEMENT FINISHES

3.8.1 Defects

Repair surface defects in accordance with ACI 301 Section 5.

3.8.2 Formed Surfaces

3.8.2.1 Tolerances

ACI 117 and as indicated.

3.8.2.2 As-Cast Rough Form

Provide for surfaces not exposed to public view a surface finish SF-1.0. Patch holes and defects in accordance with ACI 301.

3.9 FLOOR, SLAB, AND PAVEMENT FINISHES AND MISCELLANEOUS CONSTRUCTION

3.9.1 Finish

3.9.2 Concrete Walks

Provide 4 inches thick minimum. Provide contraction joints spaced every 5 linear feet unless otherwise indicated. Cut contraction joints one inch deep with a jointing tool after the surface has been finished. Provide 0.5 inch thick transverse expansion joints at changes in direction where sidewalk abuts curb, steps, rigid pavement, or other similar structures; space expansion joints every 50 feet maximum. Give walks a broomed finish. Unless indicated otherwise, provide a transverse slope of 1/48. Limit variation in cross section to 1/4 inch in 5 feet.

3.10 JOINTS

3.10.1 Construction Joints

Make and locate joints not indicated so as not to impair strength and appearance of the structure, as approved. Joints must be perpendicular to main reinforcement. Reinforcement must be continued and developed across construction joints. Locate construction joints as follows:

3.11 CURING AND PROTECTION

ACI 301 Section 5, unless otherwise specified. Begin curing immediately following form removal. Avoid damage to concrete from vibration created by blasting, pile driving, movement of equipment in the vicinity, disturbance of formwork or protruding reinforcement, and any other activity resulting in ground vibrations. Protect concrete from injurious action by sun, rain, flowing water, frost, mechanical injury, tire marks, and oil stains. Do not allow concrete to dry out from time of placement until the expiration of the specified curing period. Do not use membrane-forming compound on surfaces where appearance would be objectionable, on any surface to be painted, where coverings are to be bonded to the concrete, or on concrete to which other concrete is to be bonded. If forms are removed prior to the expiration of the curing period, provide another curing procedure specified herein for the remaining portion of the curing period. Provide moist curing for those areas receiving liquid chemical sealer-hardener or epoxy coating. Allow curing compound/sealer installations to cure prior to the installation of materials that adsorb VOCs.

3.11.1 Curing Periods

ACI 301 Section 5, except 10 days for pavement. Begin curing immediately after placement. Protect concrete from premature drying, excessively hot temperatures, and mechanical injury; and maintain minimal moisture loss at a relatively constant temperature for the period necessary for hydration of the cement and hardening of the concrete. The materials and methods of curing are subject to approval by the Contracting Officer.

3.11.2 Curing Formed Surfaces

Accomplish curing of formed surfaces by moist curing with forms in place for full curing period or until forms are removed. If forms are removed before end of curing period, accomplish final curing of formed surfaces by any of the curing methods specified above, as applicable.

3.11.3 Curing Unformed Surfaces

Accomplish initial curing of unformed surfaces, such as monolithic slabs, floor topping, and other flat surfaces, by membrane curing.

Unless otherwise specified, accomplish final curing of unformed surfaces by any of curing methods specified, as applicable.

Accomplish final curing of concrete surfaces to receive liquid floor hardener of finish flooring by moisture-retaining cover curing.

3.11.4 Temperature of Concrete During Curing

When temperature of atmosphere is 41 degrees F and below, maintain temperature of concrete at not less than 55 degrees F throughout concrete curing period or 45 degrees F when the curing period is measured by maturity. When necessary, make arrangements before start of concrete placing for heating, covering, insulation, or housing as required to maintain specified temperature and moisture conditions for concrete during curing period.

When the temperature of atmosphere is 80 degrees F and above or during other climatic conditions which cause too rapid drying of concrete, make

arrangements before start of concrete placing for installation of wind breaks, of shading, and for fog spraying, wet sprinkling, or moisture-retaining covering of light color as required to protect concrete during curing period.

Changes in temperature of concrete must be uniform and not exceed 37 degrees F in any 1 hour nor 80 degrees F in any 24-hour period.

3.11.5 Protection from Mechanical Injury

During curing period, protect concrete from damaging mechanical disturbances, particularly load stresses, heavy shock, and excessive vibration and from damage caused by rain or running water.

3.11.6 Protection After Curing

Protect finished concrete surfaces from damage by construction operations.

3.12 FIELD QUALITY CONTROL

3.12.1 Sampling

ASTM C172/C172M. Collect samples of fresh concrete to perform tests specified. ASTM C31/C31M for making test specimens.

3.12.2 Testing

3.12.2.1 Slump Tests

ASTM C143/C143M. Take concrete samples during concrete placement/discharge. The maximum slump may be increased as specified with the addition of an approved admixture provided that the water-cementitious material ratio is not exceeded. Perform tests at commencement of concrete placement, when test cylinders are made, and for each batch (minimum) or every 20 cubic yards (maximum) of concrete.

3.12.2.2 Temperature Tests

Test the concrete delivered and the concrete in the forms. Perform tests in hot or cold weather conditions (below 50 degrees F and above 80 degrees F) for each batch (minimum) or every 20 cubic yards (maximum) of concrete, until the specified temperature is obtained, and whenever test cylinders and slump tests are made.

3.12.2.3 Compressive Strength Tests

ASTM C39/C39M. Make six 6 inch by 12 inch test cylinders for each set of tests in accordance with ASTM C31/C31M, ASTM C172/C172M and applicable requirements of ACI 305R and ACI 306R. Take precautions to prevent evaporation and loss of water from the specimen. Test two cylinders at 7 days, two cylinders at 28 days, and hold two cylinder in reserve. Take samples for strength tests not less than once a day, nor less than once for each 100 cubic yards of concrete for the first 500 cubic yards, then every 500 cubic yards thereafter, nor less than once for each 5400 square feet of surface area for slabs or walls. For the entire project, take no less than five sets of samples and perform strength tests for each mix design of concrete placed. Each strength test result must be the average of two cylinders from the same concrete sample tested at 28 days. Concrete compressive tests must meet the requirements of ACI 318 Section

5.6. Retest locations represented by erratic core strengths. Where retest does not meet concrete compressive strength requirements submit a mitigation or remediation plan for review and approval by the contracting officer. Repair core holes with nonshrink grout. Match color and finish of adjacent concrete.

3.12.2.4 Air Content

Test air-entrained concrete for air content at the same frequency as specified for slump tests.

3.12.2.5 Strength of Concrete Structure

The strength of the concrete structure will be considered to be deficient if any of the following conditions are identified:

Failure to meet compressive strength tests as evaluated.

Reinforcement not conforming to requirements specified.

Concrete which differs from required dimensions or location in such a manner as to reduce strength.

Concrete curing and protection of concrete against extremes of temperature during curing, not conforming to requirements specified.

Concrete subjected to damaging mechanical disturbances, particularly load stresses, heavy shock, and excessive vibration.

Poor workmanship likely to result in deficient strength.

Where the strength of the concrete structure is considered deficient submit a mitigation or remediation plan for review and approval by the contracting officer.

3.12.2.6 Non-Conforming Materials

Factors that indicate that there are non-conforming materials include (but not limited to) excessive compressive strength, inadequate compressive strength, excessive slump, excessive voids and honeycombing, concrete delivery records that indicate excessive time between mixing and placement, or excessive water was added to the mixture during delivery and placement. Any of these indicators alone are sufficient reason for the Contracting Officer to request additional sampling and testing.

Investigations into non-conforming materials must be conducted at the Contractor's expense. The Contractor must be responsible for the investigation and must make written recommendations to adequately mitigate or remediate the non-conforming material. The Contracting Officer may accept, accept with reduced payment, require mitigation, or require removal and replacement of non-conforming material at no additional cost to the Government.

3.12.2.7 Testing Concrete Structure for Strength

When there is evidence that strength of concrete structure in place does not meet specification requirements or there are non-conforming materials, make cores drilled from hardened concrete for compressive strength determination in accordance with ASTM C42/C42M, and as follows:

a. Take at least three representative cores from each member or area of concrete-in-place that is considered potentially deficient. Location of cores will be determined by the Contracting Officer.

b. Test cores after moisture conditioning in accordance with ASTM C42/C42M if concrete they represent is more than superficially wet under service.

c. Air dry cores, (60 to 80 degrees F with relative humidity less than 60 percent) for 7 days before test and test dry if concrete they represent is dry under service conditions.

Strength of cores from each member or area are considered satisfactory if their average is equal to or greater than 85 percent of the 28-day design compressive strength of the class of concrete.

Fill core holes solid with patching mortar and finished to match adjacent concrete surfaces.

Correct concrete work that is found inadequate by core tests in a manner approved by the Contracting Officer.

3.13 REPAIR, REHABILITATION AND REMOVAL

Before the Contracting Officer accepts the structure the Contractor must inspect the structure for cracks, damage and substandard concrete placements that may adversely affect the service life of the structure. A report documenting these defects must be prepared which includes recommendations for repair, removal or remediation must be submitted to the Contracting Officer for approval before any corrective work is accomplished.

3.13.1 Repair of Weak Surfaces

Weak surfaces are defined as mortar-rich, rain-damaged, uncured, or containing exposed voids or deleterious materials. Concrete surfaces with weak surfaces less than 1/4 inch thick must be diamond ground to remove the weak surface. Surfaces containing weak surfaces greater than 1/4 inch thick must be removed and replaced or mitigated in a manner acceptable to the Contracting Officer.

3.13.2 Failure of Quality Assurance Test Results

Proposed mitigation efforts by the Contractor must be approved by the Contracting Officer prior to proceeding.

-- End of Section --

THIS PAGE HAS BEEN INTENTIONALLY LEFT BLANK

SECTION 04 20 00

UNIT MASONRY
11/15

PART 1 GENERAL

1.1 REFERENCES

The publications listed below form a part of this specification to the extent referenced. The publications are referred to within the text by the basic designation only.

ASTM INTERNATIONAL (ASTM)

ASTM A1008/A1008M	(2015) Standard Specification for Steel, Sheet, Cold-Rolled, Carbon, Structural, High-Strength Low-Alloy and High-Strength Low-Alloy with Improved Formability, Solution Hardened, and Bake Hardened
ASTM A1064/A1064M	(2015) Standard Specification for Carbon-Steel Wire and Welded Wire Reinforcement, Plain and Deformed, for Concrete
ASTM A153/A153M	(2016) Standard Specification for Zinc Coating (Hot-Dip) on Iron and Steel Hardware
ASTM A167	(2011) Standard Specification for Stainless and Heat-Resisting Chromium-Nickel Steel Plate, Sheet, and Strip
ASTM A615/A615M	(2015a; E 2015) Standard Specification for Deformed and Plain Carbon-Steel Bars for Concrete Reinforcement
ASTM A641/A641M	(2009a; R 2014) Standard Specification for Zinc-Coated (Galvanized) Carbon Steel Wire
ASTM A653/A653M	(2015) Standard Specification for Steel Sheet, Zinc-Coated (Galvanized) or Zinc-Iron Alloy-Coated (Galvannealed) by the Hot-Dip Process
ASTM A951/A951M	(2011) Standard Specification for Steel Wire for Masonry Joint Reinforcement
ASTM A996/A996M	(2015) Standard Specification for Rail-Steel and Axle-Steel Deformed Bars for Concrete Reinforcement
ASTM B370	(2012) Standard Specification for Copper Sheet and Strip for Building Construction

ASTM C1019	(2014) Standard Test Method for Sampling and Testing Grout
ASTM C1384	(2012a) Standard Specification for Admixtures for Masonry Mortars
ASTM C1611/C1611M	(2014) Standard Test Method for Slump Flow of Self-Consolidating Concrete
ASTM C207	(2006; R 2011) Standard Specification for Hydrated Lime for Masonry Purposes
ASTM C270	(2014a) Standard Specification for Mortar for Unit Masonry
ASTM C476	(2010) Standard Specification for Grout for Masonry
ASTM C494/C494M	(2015a) Standard Specification for Chemical Admixtures for Concrete
ASTM C62	(2013a) Building Brick (Solid Masonry Units Made from Clay or Shale)
ASTM C652	(2015) Hollow Brick (Hollow Masonry Units Made from Clay or Shale)
ASTM C67	(2014) Standard Test Methods for Sampling and Testing Brick and Structural Clay Tile
ASTM C90	(2015) Loadbearing Concrete Masonry Units

THE MASONRY SOCIETY (TMS)

TMS MSJC	(2011) Masonry Standard Joint Committee's (MSJC) Book - Building Code Requirements and Specification for Masonry Structures, Containing TMS 402/ACI 530/ASCE 5, TMS 602/ACI 530.1/ASCE 6, and Companion Commentaries

1.2 SUBMITTALS

Government approval is required for submittals with a "G" designation; submittals not having a "G" designation are for Contractor Quality Control approval. Submit the following in accordance with Section 01 33 00 SUBMITTAL PROCEDURES:

SD-02 Shop Drawings

Brick Infill Wall; G

Infill wall detail drawings at pits sealed and signed by Contractor's designated professional engineer.

SD-03 Product Data

Hot Weather Procedures; G
Cold Weather Procedures; G

Clay or Shale Brick; G

Cement; G
Cementitious Materials; G

SD-04 Samples

Clay or Shale Brick for brick infill walls; G
Concrete Masonry Units (CMU); G

SD-05 Design Data

Masonry Compressive Strength; G

SD-06 Test Reports

Field Testing of Grout

SD-07 Certificates

Clay or Shale Brick
Admixtures for Masonry Mortar
Admixtures for Grout
Anchors, Ties, and Bar Positioners
Joint Reinforcement

SD-08 Manufacturer's Instructions

Admixtures for Masonry Mortar
Admixtures for Grout

1.3 QUALITY ASSURANCE

1.3.1 Masonry Mock-Up Panels

1.3.1.1 Mock-Up Panel Location

After material samples are approved construct one section of brick infill wall for COR approval.

1.3.1.2 Mock-Up Panel Purpose

The completed panel is used as the standard of workmanship for the type of masonry represented. Do not commence masonry work until the mock-up panel has been completed and approved.

1.4 DELIVERY, STORAGE, AND HANDLING

Deliver, store, handle, and protect material to avoid chipping, breakage, and contact with soil or contaminating material. Store and prepare materials in already disturbed areas to minimize project site disturbance and size of project site.

1.4.1 Masonry Units

Cover and protect masonry units from precipitation. Conform to handling

and storage requirements of TMS MSJC.

a. Pack glazed brick in the manufacturer's standard paper cartons, trays, or shrink wrapped pallets with a divider between each unit. Do not stack pallets. Do not remove units from cartons until cartons are placed on scaffolds or in the location where units are to be laid.

1.4.2 Reinforcement, Anchors, and Ties

Store steel reinforcing bars, coated anchors, ties, and joint reinforcement above the ground. Maintain steel reinforcing bars and uncoated ties free of loose mill scale and loose rust.

1.4.3 Cementitious Materials, Sand and Aggregates

Deliver cementitious and other packaged materials in unopened containers, plainly marked and labeled with manufacturers' names and brands. Store cementitious material in dry, weathertight enclosures or completely cover. Handle cementitious materials in a manner that will prevent the inclusion of foreign materials and damage by water or dampness. Store sand and aggregates in a manner to prevent contamination and segregation.

1.5 PROJECT/SITE CONDITIONS

Conform to TMS MSJC for hot and cold weather masonry erection.

1.5.1 Hot Weather Procedures

When ambient air temperature exceeds 100 degrees F, or exceeds 90 degrees F and the wind velocity is greater than 8 mph, comply with TMS MSJC Article 1.8 D for: preparation prior to conducting masonry work; construction while masonry work is in progress; and protection for newly completed masonry.

1.5.2 Cold Weather Procedures

When ambient temperature is below 40 degrees F, comply with TMS MSJC Article 1.8 C for: preparation prior to conducting masonry work; construction while masonry work is in progress; and protection for newly completed masonry.

PART 2 PRODUCTS

2.1 SYSTEM DESCRIPTION

2.1.1 Design - Specified Compressive Strength of Masonry

The specified compressive strength of masonry, f'm, is 1500 psi.

2.1.2 Performance - Verify Masonry Compressive Strength

Verify specified compressive strength of masonry using the "Unit Strength Method" of TMS MSJC. Submit calculations and certifications of unit and mortar strength.

Verify specified compressive strength of masonry using the "Prism Test Method" of TMS MSJC when the "Unit Strength Method" cannot be used. Submit test results.

2.2 MANUFACTURED UNITS

2.2.1 General Requirements

Do not change the source of materials, which will affect the appearance of the finished work, after the work has started except with Contracting Officer's approval. Submit test reports from an approved independent laboratory. Certify test reports on a previously tested material as the same materials as that proposed for use in this project. Submit certificates of compliance stating that the materials meet the specified requirements.

2.2.2 Clay or Shale Brick

2.2.2.1 General

2.2.2.1.1 Sample Submittal

Submit brick samples as specified, showing the color range and texture of clay or shale brick. Limit units used on the project to those that conform to the approved sample. Submit sample of colored mortar with applicable masonry unit and color samples of three stretcher units and one unit for each type of special shape.

2.2.2.1.2 Uniformity

Manufacture bricks at one time and from the same run. Deliver clay or shale brick units factory-blended to provide a uniform appearance and color range in the completed wall.

2.2.2.2 Solid Clay or Shale Brick

Provide solid clay or shale brick that conforms to Type HBX ASTM C62. Where brick cores, recesses, or deformation would be exposed to view, provide 100 percent solid units. Provide brick with texture and color tange to match existing.

Provide brick with specified sizes to match existing.

2.2.2.3 Hollow Clay or Shale Brick

Provide hollow clay or shale brick that conforms to ASTM C652, Type HBX .

a. Provide brick size to match existing.

2.2.3 Concrete Units

2.2.3.1 Concrete Masonry Units (CMU)

2.2.3.1.1 Cement

Use only cement that has a low alkali content and is of one brand.

2.2.3.1.2 Size

Provide units with specified dimension of 8 inches wide, 8 inches high, and 16 inches long.

2.2.3.1.3 Weather Exposure

Provide concrete masonry units with water-repellant admixture added during manufacture where units will be exposed to weather..

2.2.3.1.4 Unit Types

a. Hollow Load-Bearing Units: ASTM C90, lightweight or medium weight .

2.3 EQUIPMENT

2.3.1 Grout Pumps

Pumping through aluminum tubes is not permitted.

2.4 MATERIALS

2.4.1 Mortar Materials

2.4.1.1 Cementitious Materials

Provide cementitious materials that conform to those permitted by ASTM C270.

2.4.1.2 Hydrated Lime and Alternates

Provide lime that conforms to one of the materials permitted by ASTM C207 for use in combination with portland cement, hydraulic cement, and blended hydraulic cement. Do not use lime in combination with masonry cement or mortar cement.

2.4.1.3 Admixtures for Masonry Mortar

In cold weather, use a non-chloride based accelerating admixture that conforms to ASTM C1384, unless Type III portland cement is used in the mortar.

Provide mortar that contains a water-repellent admixture that conforms to ASTM C1384. Provide a water-repellent admixture, conforming to ASTM C1384 and of the same brand and manufacturer as the block's integral water-repellent, in the mortar used to place concrete masonry units that have an integral water-repellent admixture.

2.4.1.4 Aggregate and Water

Provide aggregate (sand) and water that conform to materials permitted by ASTM C270.

2.4.2 Grout and Ready-Mix Grout Materials

2.4.2.1 Cementitious Materials for Grout

Provide cementitious materials that conform to those permitted by ASTM C476.

2.4.2.2 Admixtures for Grout

Water-reducing admixtures that conform to ASTM C494/C494M Type F or G and viscosity-modifying admixtures that conform to ASTM C494/C494M Type S are permitted for use in grout. Other admixtures require approval by the Contracting Officer.

In cold weather, a non-chloride based accelerating admixture may be used subject to approval by the Contracting Officer; use accelerating admixture that is non-corrosive and conforms to ASTM C494/C494M, Type C.

2.4.2.3 Aggregate and Water

Provide fine and coarse aggregates and water that conform to materials permitted by ASTM C476.

2.5 MORTAR AND GROUT MIXES

2.5.1 Mortar Mix

a. Provide mortar Type S unless specified otherwise herein.

b. Provide mortar that conforms to ASTM C270.

c. For field-batched mortar, measure component materials by volume. Use measuring boxes for materials that do not come in packages, such as sand, for consistent batching. Mix cementitious materials and aggregates between 3 and 5 minutes in a mechanical batch mixer with a sufficient amount of water to produce a workable consistency. Do not hand mix mortar unless approved by the Contracting Officer. Maintain workability of mortar by remixing or retempering. Discard mortar that has begun to stiffen or is not used within 2-1/2 hours after initial mixing.

d. For preblended mortar, follow manufacturer's mixing instructions.

2.5.2 Grout and Ready Mix Grout Mix

Use grout that conforms to ASTM C476, fine or coarse. Use conventional grout with a slump between 8 and 11 inches. Use self-consolidating grout with slump flow of 24 to 30 inches and a visual stability index (VSI) not greater than 1. Provide minimum grout strength of 2000 psi in 28 days, as tested in accordance with ASTM C1019. Do not change proportions and do not use materials with different physical or chemical characteristics in grout for the work unless additional evidence is furnished that grout meets the specified requirements. Use ready-mixed grout that conforms to ASTM C476.

2.6 ACCESSORIES

2.6.1 Grout Barriers

Grout barriers for vertical cores that consist of fine mesh wire, fiberglass, or expanded metal.

2.6.2 Anchors, Ties, and Bar Positioners

2.6.2.1 General

a. Fabricate anchors and ties without drips or crimps. Size anchors and ties to provide a minimum of 5/8 inch mortar cover from each face of masonry.

b. Fabricate steel wire anchors and ties shall from wire conforming to ASTM A1064/A1064M and hot-dip galvanize in accordance with

ASTM A153/A153M.

c. Fabricate joint reinforcement in conformance with ASTM A951/A951M. Hot dip galvanize joint reinforcement in exterior walls and in interior walls exposed to moist environment in conformance with ASTM A153/A153M. Galvanize joint reinforcement in other interior walls in conformance with ASTM A641/A641M; coordinate with paragraph JOINT REINFORCEMENT below.

d. Fabricate sheet metal anchors and ties in conformance with ASTM A1008/A1008M. Hot dip galvanize sheet metal anchors and ties in exterior walls and in interior walls exposed to moist environment in compliance with ASTM A153/A153M Class B. Galvanize sheet metal anchors and ties in other interior walls in compliance with ASTM A653/A653M, Coating Designation G60.

2.6.2.2 Bar Positioners

Factory-fabricate bar positioners, used to prevent displacement of reinforcing bars during the course of construction, from 9 gauge steel wire or equivalent, and hot-dip galvanized.

2.6.3 Joint Reinforcement

Factory fabricate joint reinforcement in conformance with ASTM A951/A951M, welded construction. Provide ladder type joint reinforcement, having one longitudinal wire in the mortar bed of each face shell for hollow units and one wire for solid units and with all wires a minimum of 9 gauge. Size joint reinforcement to provide a minimum of 5/8 inch cover from each face. Space crosswires not more than 16 inches. Provide joint reinforcement for straight runs in flat sections not less than 10 feet long. Provide joint reinforcement with factory formed corners and intersections. If approved for use, joint reinforcement may be furnished with adjustable wall tie features. Submit one piece of each type used, including corner and wall intersection pieces, showing at least two cross wires.

2.6.4 Reinforcing Steel Bars

Reinforcing steel bars and rods shall conform to ASTM A615/A615M or ASTM A996/A996M, Grade 60.

2.6.5 Through Wall Flashing and Weeps

2.6.5.1 General

Provide coated copper, copper or stainless steel sheet, self-adhesive rubberized sheet, or reinforced membrane sheet flashing except that flashing indicated to terminate in reglets shall be metal or coated-metal flashing and except that the material shall be one which is not adversely affected by dampproofing material.

2.6.5.2 Coated-Copper Flashing

Provide 7 ounce, electrolytic copper sheet, uniformly coated on both sides with acidproof, alkaliproof, asphalt impregnated kraft paper or polyethylene sheets.

2.6.5.3 Copper or Stainless Steel Flashing

Provide copper sheet, complying with ASTM B370, minimum 16 ounce weight; or stainless steel, ASTM A167, Type 304 or 316, 0.015 inch thick, No. 2D finish.

2.6.5.4 Reinforced Membrane Flashing

Provide polyester film core with a reinforcing fiberglass scrim bonded to one side. Provide membrane that is impervious to moisture, flexible, is not affected by caustic alkalis, and after being exposed for not less than 1/2 hour to a temperature of 32 degrees F, shows no cracking when, at that temperature, it is bent 180 degrees over a 1/16 inch diameter mandrel and then bent at the same point over the same size mandrel in the opposite direction 360 degrees.

2.6.5.5 Rubberized Flashing

Provide self-adhesive rubberized asphalt sheet flashing consisting of 32-mil thick pliable and highly adhesive rubberized asphalt compound bonded completely and integrally to 8-mil thick, high density, cross-laminated polyethylene film to produce an overall thickness of 40 mils. Provide rubberized, asphalt-based mastic and surface conditioner that are each approved by flashing manufacturer for use with flashing material.

2.6.5.6 Weep Ventilators

Provide weep ventilators that are prefabricated from stainless steel or plastic. Provide inserts with grill or louver-type openings designed to allow the passage of moisture from cavities and to prevent the entrance of insects, and with a rectangular closure strip to prevent mortar droppings from clogging the opening. Provide ventilators with compressible flanges to fit in a standard 3/8 inch wide mortar joint and with height equal to the nominal height of the unit.

2.6.5.7 Metal Drip Edge

Provide stainless steel drip edge, 15-mil thick, hemmed edges, with down-turned drip at the outside edge and upturned dam at the inside edge for use with membrane flashings.

PART 3 EXECUTION

3.1 EXAMINATION

Prior to start of work, verify the applicable conditions as set forth in TMS MSJC, inspection.

3.2 PREPARATION

3.2.1 Stains

Protect exposed surfaces from mortar and other stains. When mortar joints are tooled, remove mortar from exposed surfaces with fiber brushes and wooden paddles. Protect base of walls from splash stains by covering adjacent ground with sand, sawdust, or polyethylene.

3.2.2 Loads

Do not apply uniform loads for at least 12 hours or concentrated loads for at least 72 hours after masonry is constructed. Provide temporary bracing as required.

3.2.3 Concrete Surfaces

Where masonry is to be placed, clean concrete of laitance, dust, dirt, oil, organic matter, or other foreign materials and slightly roughen to provide a surface texture with a depth of at least 1/8 inch. Sandblast, if necessary, to remove laitance from pores and to expose the aggregate.

3.2.4 Shelf Angles

Adjust shelf angles as required to keep the masonry level and at the proper elevation.

3.2.5 Bracing

Provide bracing and scaffolding necessary for masonry work. Design bracing to resist wind pressure as required by OSHA and local codes. Do not remove bracing in less than 10 days.

3.3 ERECTION

3.3.1 General

a. Coordinate masonry work with the work of other trades to accommodate built-in items and to avoid cutting and patching. Lay masonry units in running bond pattern. Lay facing courses level with back-up courses, unless the use of adjustable ties has been approved in which case the tolerances is plus or minus 1/2 inch. Adjust each unit to its final position while mortar is still soft and has plastic consistency.

b. Remove and clean units that have been disturbed after the mortar has stiffened, and relay with fresh mortar. Keep air spaces, cavities, chases, expansion joints, and spaces to be grouted free from mortar and other debris. Select units to be used in exposed masonry surfaces from those having the least amount of chipped edges or other imperfections detracting from the appearance of the finished work.

c. When necessary to temporarily discontinue the work, step (rack) back the masonry for joining when work resumes. Toothing may be used only when specifically approved by the Contracting Officer. Before resuming work, remove loose mortar and thoroughly clean the exposed joint. Cover the top of walls subjected to rain or snow with nonstaining waterproof covering or membrane when work is not in process. Extend the covering a minimum of 2 feet down on each side of the wall and hold securely in place.

d. Ensure that units being laid and surfaces to receive units are free of water film and frost. Lay solid units in a nonfurrowed full bed of mortar. Bevel mortar for veneer wythes and slope down toward the cavity side. Shove units into place so that the vertical joints are tight. Completely fill vertical joints between solid units with mortar, except where indicated at control, expansion, and isolation joints. Place hollow units so that mortar extends to the depth of the

face shell at heads and beds, unless otherwise indicated. Mortar will be permitted to protrude up to 1/2 inch into the space or cells to be grouted. Provide means to prevent mortar from dropping into the space below or clean grout spaces prior to grouting.

3.3.1.1 Jointing

Tool mortar joints when the mortar is thumbprint hard. Tool horizontal joints after tooling vertical joints. Brush mortar joints to remove loose and excess mortar.

3.3.1.1.1 Tooled Joints

Tool mortar joints in exposed exterior and interior masonry surfaces concave, using a jointer that is slightly larger than the joint width so that complete contact is made along the edges of the unit. Perform tooling so that the mortar is compressed and the joint surface is sealed. Use a jointer of sufficient length to obtain a straight and true mortar joint.

3.3.1.1.2 Door and Window Frame Joints

On the exposed interior side of exterior frames, joints between frames and abutting masonry walls shall be raked to a depth of 3/8 inch. On the exterior side of exterior frames, joints between frames and abutting masonry walls shall be raked to a depth of 3/8 inch.

3.3.1.1.3 Joint Widths

a. Construct brick masonry with mortar joint widths equal to the difference between the specified and nominal dimensions of the unit, within tolerances permitted by TMS MSJC.

b. Provide 3/8 inch wide mortar joints in concrete masonry.

c. Maintain mortar joint widths within tolerances permitted by TMS MSJC

3.3.1.2 Cutting and Fitting

Use full units of the proper size wherever possible, in lieu of cut units. Locate cut units where they would have the least impact on the architectural aesthetic goals of the facility. Perform cutting and fitting, including that required to accommodate the work of others, by masonry mechanics using power masonry saws. Concrete masonry units may be wet or dry cut. Before being placed in the work, dry wet-cut units to the same surface-dry appearance as uncut units being laid in the wall. Provide cut edges that are clean, true and sharp.

a. Carefully make openings in the masonry so that wall plates, cover plates or escutcheons required by the installation will completely conceal the openings and will have bottoms parallel with the masonry bed joints. Provide reinforced masonry lintels above openings over 12 inches wide for pipes, ducts, cable trays, and other wall penetrations, unless steel sleeves are used.

b. Do not reduce masonry units in size by more than one-third in height and one-half in length. Do not locate cut products at ends of walls, corners, and other openings.

3.3.1.3 Unfinished Work

Rack back unfinished work for joining with new work. Toothing may be resorted to only when specifically approved by the Contracting Officer. Remove loose mortar and thoroughly clean the exposed joints before laying new work.

3.3.2 Clay or Shale Brick Masonry

3.3.2.1 Brick Placement

Blend all brick at the jobsite from several cubes to produce a uniform appearance when installed. An observable "banding" or "layering" of colors or textures caused by improperly mixed brick is unacceptable. Lay brick facing with the better face exposed. Lay brick in running bond with each course bonded at corners, unless otherwise indicated. Lay molded brick with the frog side down. Do not lay brick that is cored, recessed, or has other deformations in a manner that allows those deformations to be exposed to view; lay 100 percent solid units in these areas. Completely fill head and bed joints of solid units with mortar. Lay hollow units with mortar joints as specified for concrete masonry units.

3.3.2.2 Wetting of Units

Wetting of clay, shale brick, or hollow brick units having an initial rate of absorption of more than 1 gram per minute per square inch of bed surface shall be in conformance with ASTM C67. Ensure that each unit is nearly saturated when wetted but surface dry when laid.

Test clay or shale brick daily on the job, prior to laying, as follows: Using a wax pencil, draw a circle the size of a quarter on five randomly selected bricks. Apply 20 drops of water with a medicine dropper to the surface within the circle on each brick. If the average time that the water is completely absorbed in the five bricks is less than 1-1/2 minutes, wet bricks represented by the five bricks tested.

3.3.3 Composite Walls

Tie masonry wythes together with joint reinforcement or with unit wall ties. Embed wall ties at least 1-1/2 inch into mortar of solid units and at least 1/2 inch into the mortar of the outer face shell of hollow units. Provide at least one tie every 2.67 square feet for wire size W1.7 and at least one tie every 4.50 square feet for wire size W2.8. Space ties at a maximum of 36 inches horizontally and 24 inches vertically. Do not cross expansion joints or control joints with ties. Fill collar joints between masonry facing and masonry backup solidly with grout.

3.3.4 Reinforced, Single Wythe Concrete Masonry Units Walls

3.3.4.1 Concrete Masonry Unit Placement

a. Fully bed units used to form infill walls. Mortar head joints for a distance in from the face of the unit not less than the thickness of the face shell.

3.3.4.2 Preparation for Reinforcement

Lay units in such a manner as to preserve the unobstructed vertical continuity of cores to be grouted. Remove mortar protrusions extending

1/2 inch or more into cells before placing grout. Position reinforcing bars accurately as indicated before placing grout. Where vertical reinforcement occurs, fill cores solid with grout in accordance with paragraph PLACING GROUT in this Section.

3.3.5 ANCHORAGE

3.3.5.1 Anchorage to Concrete

Anchor masonry infill walls at existing pits to existing concrete element in accordance with the Contractor's designed engineer's drawings.

3.3.6 Sills and Copings

Set sills and copings in a full bed of mortar with faces plumb and true. Slope sills and copings to drain water. Mechanically anchor copings and sills longer than 4 feet as indicated.

3.4 INSTALLATION

3.4.1 Bar Reinforcement Installation

3.4.1.1 Preparation

Clean reinforcement of loose, flaky rust, scale, grease, mortar, grout, and other coatings that might destroy or reduce its bond prior to placing grout. Do not use bars with kinks or bends not shown on the approved shop drawings. Place reinforcement prior to grouting. Unless otherwise indicated, extend vertical wall reinforcement to within 2 inches of tops of walls.

3.4.1.2 Positioning Bars

a. Accurately place vertical bars within the cells at the positions indicated on the drawings. A minimum clearance of 1/2 inch shall be maintained between the bars and masonry units. Provide minimum clearance between parallel bars of 1/2 inch between the bars and masonry units for coarse grout and a minimum clearance of 1/4 inch between the bars and masonry units for fine grout. Provide minimum clearance between parallel bars of 1 inch or one diameter of the reinforcement, whichever is greater. Vertical reinforcement may be held in place using bar positioners located near the ends of each bar and at intermediate intervals of not more than 192 diameters of the reinforcement or by other means to prevent displacement beyond permitted tolerances. As masonry work progresses, secure vertical reinforcement to prevent displacement beyond allowable tolerances.

b. Wire column and pilaster lateral ties in position around the vertical reinforcing bars. Place lateral ties in contact with the vertical reinforcement and do not place in horizontal mortar bed joints.

c. Position horizontal reinforcing bars as indicated. Stagger splices in adjacent horizontal bars, unless otherwise indicated.

d. Form splices by lapping bars as indicated. Do not cut, bend or eliminate reinforcing bars. Foundation dowel bars may be field-bent when permitted by TMS MSJC.

3.4.2 Placing Grout

3.4.2.1 General

Fill cells containing reinforcing bars with grout.

Discard site-mixed grout that is not placed within 1-1/2 hours after water is first added to the batch or when the specified slump is not met without adding water after initial mixing. Discard ready-mixed grout that does not meet the specified slump without adding water other than water that was added at the time of initial discharge. Allow sufficient time between grout lifts to preclude displacement or cracking of face shells of masonry units. Provide a grout shear key between lifts when grouting is delayed and the lower lift loses plasticity. If blowouts, flowouts, misalignment, or cracking of face shells should occur during construction, tear down the wall and rebuild.

3.4.2.2 Horizontal Grout Barriers

Embed horizontal grout barriers in mortar below cells of hollow units receiving grout.

3.4.2.3 Grout Placement

A grout pour is the total height of masonry to be grouted prior to erection of additional masonry. A grout lift is an increment of grout placement within a grout pour. A grout pour is filled by one or more lifts of grout.

a. Lay masonry to the top of a pour permitted by TMS MSJC Table 7, based on the size of the grout space and the type of grout. Prior to grouting, remove masonry protrusions that extend 1/2 inch or more into cells or spaces to be grouted. Hold reinforcement, bolts, and embedded connections rigidly in position before grouting is started. Do not prewet concrete masonry units.

b. Place grout using a hand bucket, concrete hopper, or grout pump to fill the grout space without segregation of aggregate. Operate grout pumps to produce a continuous stream of grout without air pockets, segregation, or contamination.

c. If the masonry has cured at least 4 hours, grout slump is maintained between 10 to 11 inches, and no intermediate reinforced bond beams are placed between the top and bottom of the pour height, place conventional grout in lifts not exceeding 12 feet 8 inches. For the same curing and slump conditions but with intermediate bond beams, limit conventional grout lift to the bottom of the lowest bond beam that is more than 5 feet 4 inches above the bottom of the lift, but do not exceed 12 feet 8 inches. If masonry has not cured at least 4 hours or grout slump is not maintained between 10 to 11 inches, place conventional grout in lifts not exceeding 5 feet 4 inches.

d. Consolidate conventional grout lift and reconsolidate after initial settlement before placing next lift. For grout pours that are 12 inches or less in height, consolidate and reconsolidate grout by mechanical vibration or puddling. For grout pours that are greater than 12 inches in height, consolidate and reconsolidate grout by mechanical vibration. Apply vibrators at uniformly spaced points not further apart than the visible effectiveness of the machine. Limit

duration of vibration to time necessary to produce satisfactory consolidation without causing segregation. If previous lift is not permitted to set, dip vibrator into previous lift. Do not insert vibrators into lower lifts that are in a semi-solidified state. If lower lift sets prior to placement of subsequent lift, form a grout key by terminating grout a minimum of 1-1/2 inch below a mortar joint. Vibrate each vertical cell containing reinforcement in partially grouted masonry. Do not form grout keys within beams.

e. If the masonry has cured 4 hours, place self-consolidating grout (SCG) in lifts not exceeding the pour height. If masonry has not cured for at least 4 hours, place SCG in lifts not exceeding 5 feet 4 inches. Do not mechanically consolidate self-consolidating grout. Place self-consolidating grout in accordance with manufacturer's recommendations.

f. Upon completion of each day's grouting, remove waste materials and debris from the equipment, and dispose of outside the masonry.

3.4.3 Joint Reinforcement Installation

Install joint reinforcement at 16 inches on center unless otherwise indicated. Lap joint reinforcement not less than 8 inches. Place the longitudinal wires of joint reinforcement in mortar beds to provide not less than 5/8 inch cover to either face of the unit.

3.5 APPLICATION

3.5.1 Tolerances

Lay masonry plumb, true to line, with courses level within the tolerances of TMS MSJC, Article 3.3 F.

3.6 FIELD QUALITY CONTROL

3.6.1 Tests

3.6.1.1 Field Testing of Grout

a. Perform grout testing at the following frequency: One time per day. For each required grout property to be evaluated, provide a minimum of three specimens.

b. Sample and test conventional and self-conslidating grout for compressive strength and temperature in accordance with ASTM C1019.

c. Evaluate slump in conventional grout in accordance with ASTM C1019.

d. Evaluate slump flow and visual stability index of self-consolidating grout in accordance with ASTM C1611/C1611M.

3.7 POINTING AND CLEANING

After mortar joints have attained their initial set, but prior to hardening, completely remove mortar and grout daubs and splashings from masonry-unit surfaces that will be exposed or painted. Before completion of the work, rake out defects in joints of masonry to be exposed or painted, fill with mortar, and tool to match existing joints. Immediately after grout work is completed, remove scum and stains that have percolated

through the masonry work using a low pressure stream of water and a stiff bristled brush. Do not clean masonry surfaces, other than removing excess surface mortar, until mortar in joints has hardened. Leave masonry surfaces clean, free of mortar daubs, dirt, stain, and discoloration, including scum from cleaning operations, and with tight mortar joints throughout. Do not use metal tools and metal brushes for cleaning.

3.7.1 Dry-Brushing Concrete Masonry

Dry brush exposed concrete masonry surfaces at the end of each day's work and after any required pointing, using stiff-fiber bristled brushes.

3.7.2 Clay Brick Surfaces

Clean exposed clay brick masonry surfaces to obtain surfaces free of stain, dirt, mortar and grout daubs, efflorescence, and discoloration or scum from cleaning operations. Perform cleaning in accordance with the approved cleaning procedure demonstrated on the mockup.

After cleaning, examine the sample panel of similar material for discoloration or stain as a result of cleaning. If the sample panel is discolored or stained, change the method of cleaning to ensure that the masonry surfaces in the structure will not be adversely affected. Water-soak exposed masonry surfaces and then clean with a proprietary masonry cleaning agent specifically recommended for the color and texture by the clay brick manufacturer and manufacturer of the cleaning product. Apply the solution with stiff fiber brushes, followed immediately by thorough rinsing with clean water. Use proprietary cleaning agents in conformance with the cleaning product manufacturer's printed recommendations. Remove efflorescence in conformance with the brick manufacturer's recommendations.

3.8 PROTECTION

Protect facing materials against staining. Cover top of walls with nonstaining waterproof covering or membrane to protect from moisture intrusion when work is not in progress. Continue covering the top of the unfinished walls until the wall is waterproofed with a complete roof or parapet system. Extend covering a minimum of 2 feet down on each side of the wall and hold securely in place. Before starting or resuming work, clean top surface of masonry in place of loose mortar and foreign material.

-- End of Section --

SECTION 05 12 00

STRUCTURAL STEEL
05/14

PART 1 GENERAL

1.1 REFERENCES

The publications listed below form a part of this specification to the extent referenced. The publications are referred to within the text by the basic designation only.

AMERICAN INSTITUTE OF STEEL CONSTRUCTION (AISC)

AISC 201	(2006) AISC Certification Program for Structural Steel Fabricators
AISC 303	(2010) Code of Standard Practice for Steel Buildings and Bridges
AISC 325	(2011) Steel Construction Manual
AISC 326	(2009) Detailing for Steel Construction
AISC 360	(2010) Specification for Structural Steel Buildings

AMERICAN WELDING SOCIETY (AWS)

AWS A2.4	(2012) Standard Symbols for Welding, Brazing and Nondestructive Examination
AWS D1.1/D1.1M	(2015) Structural Welding Code - Steel

ASTM INTERNATIONAL (ASTM)

ASTM A123/A123M	(2013) Standard Specification for Zinc (Hot-Dip Galvanized) Coatings on Iron and Steel Products
ASTM A307	(2014) Standard Specification for Carbon Steel Bolts and Studs, 60 000 PSI Tensile Strength
ASTM A325	(2014) Standard Specification for Structural Bolts, Steel, Heat Treated, 120/105 ksi Minimum Tensile Strength
ASTM A36/A36M	(2014) Standard Specification for Carbon Structural Steel
ASTM A490	(2014a) Standard Specification for Structural Bolts, Alloy Steel, Heat Treated, 150 ksi Minimum Tensile Strength
ASTM A500/A500M	(2013) Standard Specification for Cold-Formed Welded and Seamless Carbon

	Steel Structural Tubing in Rounds and Shapes
ASTM A53/A53M	(2012) Standard Specification for Pipe, Steel, Black and Hot-Dipped, Zinc-Coated, Welded and Seamless
ASTM A563	(2015) Standard Specification for Carbon and Alloy Steel Nuts
ASTM A563M	(2007; R 2013) Standard Specification for Carbon and Alloy Steel Nuts (Metric)
ASTM A780/A780M	(2009; R 2015) Standard Practice for Repair of Damaged and Uncoated Areas of Hot-Dip Galvanized Coatings
ASTM A992/A992M	(2011) Standard Specification for Structural Steel Shapes
ASTM B695	(2004; R 2009) Standard Specification for Coatings of Zinc Mechanically Deposited on Iron and Steel
ASTM C1107/C1107M	(2014a) Standard Specification for Packaged Dry, Hydraulic-Cement Grout (Nonshrink)
ASTM C827/C827M	(2010) Change in Height at Early Ages of Cylindrical Specimens from Cementitious Mixtures
ASTM F1554	(2015) Standard Specification for Anchor Bolts, Steel, 36, 55, and 105-ksi Yield Strength
ASTM F1852	(2014) Standard Specification for "Twist Off" Type Tension Control Structural Bolt/Nut/Washer Assemblies, Steel, Heat Treated, 120/105 ksi Minimum Tensile Strength
ASTM F2329	(2013) Zinc Coating, Hot-Dip, Requirements for Application to Carbon and Alloy Steel Bolts, Screws, Washers, Nuts, and Special Threaded Fasteners
ASTM F436	(2011) Hardened Steel Washers
ASTM F844	(2007a; R 2013) Washers, Steel, Plain (Flat), Unhardened for General Use
ASTM F959	(2013) Compressible-Washer-Type Direct Tension Indicators for Use with Structural Fasteners

SOCIETY FOR PROTECTIVE COATINGS (SSPC)

SSPC PA 1	(2000; E 2004) Shop, Field, and

Maintenance Painting of Steel

SSPC Paint 20 (2002; E 2004) Zinc-Rich Primers (Type I, Inorganic, and Type II, Organic)

SSPC Paint 29 (2002; E 2004) Zinc Dust Sacrificial Primer, Performance-Based

SSPC SP 3 (1982; E 2004) Power Tool Cleaning

SSPC SP 6/NACE No.3 (2007) Commercial Blast Cleaning

U.S. DEPARTMENT OF DEFENSE (DOD)

UFC 3-301-01 (2013; Change 1) Structural Engineering

UFC 3-310-04 (2013) Seismic Design for Buildings

1.2 SUBMITTALS

Government approval is required for submittals with a "G" designation; submittals not having a "G" designation are for Contractor Quality Control approval. Submit the following in accordance with Section 01 33 00 SUBMITTAL PROCEDURES:

SD-02 Shop Drawings

Fabrication drawings including description of connections; G
Erection Drawings; G

SD-03 Product Data

Shop primer
Welding electrodes and rods
Direct Tension Indicator Washers
Non-Shrink Grout
Tension control bolts

SD-06 Test Reports

Bolts, nuts, and washers
Weld Inspection Reports
Direct Tension Indicator Washer Inspection Reports
Bolt Testing Reports

SD-07 Certificates

Steel
Bolts, nuts, and washers
Galvanizing
AISC Fabrication Plant Quality CertificationWelding procedures and qualifications
Welding electrodes and rods
AISC Erector Quality Certification

1.3 AISC QUALITY CERTIFICATION

Work must be fabricated in an AISC Certified Fabrication Plant, Category

Std. Submit AISC fabrication plant quality certification.

Work must be erected by an AISC Certified Erector. Submit AISC erector quality certification.

1.4 QUALITY ASSURANCE

1.4.1 Preconstruction Submittals

1.4.1.1 Erection Drawings

Submit for record purposes. Indicate the sequence of erection, temporary shoring and bracing. The erection drawings must conform to AISC 303.

1.4.2 Fabrication Drawing Requirements

Submit fabrication drawings for approval prior to fabrication. Prepare in accordance with AISC 326 and AISC 325. Fabrication drawings must not be reproductions of contract drawings. Include complete information for the fabrication and erection of the structure's components, including the location, type, and size of bolts, welds, member sizes and lengths, connection details, blocks, copes, and cuts. Use AWS A2.4 standard welding symbols. Shoring and temporary bracing must be designed and sealed by a registered professional engineer and submitted for record purposes, with calculations, as part of the drawings. Any deviations from the details shown on the contract drawings must be clearly highlighted on the fabrication drawings. Explain the reasons for any deviations from the contract drawings.

1.4.3 Certifications

1.4.3.1 Welding Procedures and Qualifications

Prior to welding, submit certification for each welder stating the type of welding and positions qualified for, the code and procedure qualified under, date qualified, and the firm and individual certifying the qualification tests. If the qualification date of the welding operator is more than one-year old, the welding operator's qualification certificate must be accompanied by a current certificate by the welder attesting to the fact that he has been engaged in welding since the date of certification, with no break in welding service greater than 6 months.

Conform to all requirements specified in AWS D1.1/D1.1M.

PART 2 PRODUCTS

2.1 SYSTEM DESCRIPTION

Provide the structural steel system, including shop primer or galvanizing as applicable, complete and ready for use. Structural steel systems including design, materials, installation, workmanship, fabrication, assembly, erection, inspection, quality control, and testing must be provided in accordance with AISC 360, UFC 3-301-01 and UFC 3-310-04 except as modified in this contract.

2.2 STEEL

2.2.1 Structural Steel

Wide flange and WT shapes, ASTM A992/A992M. Angles, Channels and Plates, ASTM A36/A36M.

2.2.2 Structural Steel Tubing

ASTM A500/A500M, Grade B.

2.2.3 Steel Pipe

ASTM A53/A53M, Type E or S, Grade B, weight class STD (Standard).

2.3 BOLTS, NUTS, AND WASHERS

2.3.1 Common Grade Bolts

2.3.1.1 Bolts

ASTM A307, Grade A. The bolt heads and the nuts of the supplied fasteners must be marked with the manufacturer's identification mark, the strength grade and type specified by ASTM specifications.

2.3.1.2 Nuts

ASTM A563M, Grade A, heavy hex style.

2.3.1.3 Washers

ASTM F844.

2.3.2 High-Strength Bolts

2.3.2.1 Bolts

ASTM A325, Type 1 ASTM A490, Type 1 or 2.

2.3.2.2 Nuts

ASTM A563, Grade and Style as specified in the applicable ASTM bolt standard.

2.3.2.3 Direct Tension Indicator Washers

ASTM F959. Provide ASTM B695, Class 50, Type 1 galvanizing.

2.3.2.4 Washers

ASTM F436, plain carbon steel.

2.3.3 Tension Control Bolts

ASTM F1852, Type 1, heavy-hex head assemblies consisting of steel structural bolts with splined ends, heavy-hex carbon steel nuts, and hardened carbon steel washers. Assembly finish must be plain or mechanically deposited zinc coating as applicable.

2.3.4 Foundation Anchorage

2.3.4.1 Anchor Rods

ASTM F1554 Gr 36 , Class 1A .

2.3.4.2 Anchor Nuts

ASTM A563, Grade A, hex style.

2.3.4.3 Anchor Washers

ASTM F844.

2.3.4.4 Anchor Plate Washers

ASTM A36/A36M

2.4 STRUCTURAL STEEL ACCESSORIES

2.4.1 Welding Electrodes and Rods

AWS D1.1/D1.1M; electrode strength for welds shall be 70ksi.

2.4.2 Non-Shrink Grout

ASTM C1107/C1107M, with no ASTM C827/C827M shrinkage. Grout must be nonmetallic.

2.5 GALVANIZING

ASTM F2329 for threaded parts or ASTM A123/A123M for structural steel members, as applicable, unless specified otherwise galvanize after fabrication where practicable.

2.6 FABRICATION

Fabrication must be in accordance with the applicable provisions of AISC 325. Fabrication and assembly must be done in the shop to the greatest extent possible. Punch, subpunch and ream, or drill bolt holes perpendicular to the surface of the member.

Shop splices of members between field splices will be permitted only where indicated on the Contract Drawings. Splices not indicated require the approval of the Contracting Officer.

2.6.1 Markings

Prior to erection, members must be identified by a painted erection mark. Connecting parts assembled in the shop for reaming holes in field connections must be match marked with scratch and notch marks. Do not locate erection markings on areas to be welded. Do not locate match markings in areas that will decrease member strength or cause stress concentrations. Affix embossed tags to hot-dipped galvanized members.

2.6.2 Shop Primer

SSPC Paint 20 or SSPC Paint 29, (zinc rich primer). Shop prime structural steel, except as modified herein, in accordance with SSPC PA 1. Do not

prime steel surfaces embedded in concrete, galvanized surfaces, surfaces to receive sprayed-on fireproofing, surfaces to receive epoxy coatings, surfaces designed as part of a composite steel concrete section, or surfaces within 0.5 inch of the toe of the welds prior to welding (except surfaces on which metal decking is to be welded). If flash rusting occurs, re-clean the surface prior to application of primer. Apply primer in accordance with endorsement "P1" of AISC 201 to a minimum dry film thickness of 2.0 mil.

Prior to assembly, prime surfaces which will be concealed or inaccessible after assembly. Do not apply primer in foggy or rainy weather; when the ambient temperature is below 45 degrees F or over 95 degrees F; or when the primer may be exposed to temperatures below 40 degrees F within 48 hours after application, unless approved otherwise by the Contracting Officer. Repair damaged primed surfaces with an additional coat of primer.

2.6.2.1 Cleaning

SSPC SP 6/NACE No.3, except steel exposed in spaces above ceilings, attic spaces, furred spaces, and chases that will be hidden to view in finished construction may be cleaned to SSPC SP 3 when recommended by the shop primer manufacturer. Maintain steel surfaces free from rust, dirt, oil, grease, and other contaminants through final assembly.

2.7 DRAINAGE HOLES

Adequate drainage holes must be drilled to eliminate water traps. Hole diameter must be 1/2 inch and location must be indicated on the detail drawings. Hole size and location must not affect the structural integrity.

PART 3 EXECUTION

3.1 ERECTION

Erection of structural steel must be in accordance with the applicable provisions of AISC 325.

After final positioning of steel members, provide full bearing under base plates and bearing plates using nonshrink grout. Place nonshrink grout in accordance with the manufacturer's instructions.

3.1.1 STORAGE

Material must be stored out of contact with the ground in such manner and location as will minimize deterioration.

3.2 CONNECTIONS

Except as modified in this section, connections not detailed must be designed in accordance with AISC 360. Build connections into existing work. Do not tighten anchor bolts set in concrete with impact torque wrenches. Holes must not be cut or enlarged by burning. Bolts, nuts, and washers must be clean of dirt and rust, and lubricated immediately prior to installation.

3.2.1 Common Grade Bolts

ASTM A307 bolts must be tightened to a "snug tight" fit. "Snug tight" is

the tightness that exists when plies in a joint are in firm contact. If firm contact of joint plies cannot be obtained with a few impacts of an impact wrench, or the full effort of a man using a spud wrench, contact the Contracting Officer for further instructions.

3.2.2 High-Strength Bolts

Provide direct tension indicator washers or tension control bolts in all ASTM A325 bolted connections. Bolts must be installed in connection holes and initially brought to a snug tight fit. After the initial tightening procedure, bolts must then be fully tensioned, progressing from the most rigid part of a connection to the free edges.

3.2.2.1 Installation of Direct Tension Indicator Washers (DTIW)

Where possible, the DTIW must be installed under the bolt head and the nut must be tightened. If the DTIW is installed adjacent to the turned element, provide a flat washer between the DTIW and nut when the nut is turned for tightening, and between the DTIW and bolt head when the bolt head is turned for tightening.

3.2.3 Tension Control Bolts

Bolts must be installed in connection holes and initially brought to a snug tight fit. After the initial tightening procedure, bolts must then be fully tensioned, progressing from the most rigid part of a connection to the free edges.

3.3 GAS CUTTING

Use of gas-cutting torch in the field for correcting fabrication errors will not be permitted on any major member in the structural framing. Use of a gas cutting torch will be permitted on minor members not under stress only after approval has been obtained from the Contracting Officer.

3.4 WELDING

Welding must be in accordance with AWS D1.1/D1.1M. Provide AWS D1.1/D1.1M qualified welders, welding operators, and tackers.

Develop and submit the Welding Procedure Specifications (WPS) for all welding, including welding done using prequalified procedures. Prequalified procedures may be submitted for information only; however, procedures that are not prequalified must be submitted for approval.

3.4.1 Removal of Temporary Welds, Run-Off Plates, and Backing Strips

Removal is not required.

3.5 SHOP PRIMER REPAIR

Repair shop primer in accordance with the paint manufacturer's recommendation for surfaces damaged by handling, transporting, cutting, welding, or bolting.

3.5.1 Field Priming

Steel exposed to the weather, or located in building areas without HVAC for control of relative humidity must be field primed. After erection,

the field bolt heads and nuts, field welds, and any abrasions in the shop coat must be cleaned and primed with paint of the same quality as that used for the shop coat.

3.6 GALVANIZING REPAIR

Repair damage to galvanized coatings using ASTM A780/A780M zinc rich paint for galvanizing damaged by handling, transporting, cutting, welding, or bolting. Do not heat surfaces to which repair paint has been applied.

3.7 FIELD QUALITY CONTROL

Perform field tests, and provide labor, equipment, and incidentals required for testing. The Contracting Officer must be notified in writing of defective welds, bolts, nuts, and washers within 7 working days of the date of the inspection.

3.7.1 Welds

3.7.1.1 Visual Inspection

AWS D1.1/D1.1M. Furnish the services of AWS-certified welding inspectors for fabrication and erection inspection and testing and verification inspections.

Inspection shall include proper preparation, size, gaging location, and acceptability of welds; identification marking; operation and current characteristics of welding sets in use.

Inspect proper preparation, size, gaging location, and acceptability of welds; identification marking; operation and current characteristics of welding sets in use.

3.7.1.2 Nondestructive Testing

Government has the option to conduct nondestructive testing of the welds. Nondestructive testing must be in accordance with AWS D1.1/D1.1M. Test locations, frequency, and type must be selected by the Contracting Officer. If more than 20 percent of welds made by a welder contain defects identified by testing, then all welds made by that welder must be tested by ultrasonic testing, as approved by the Contracting Officer. When all welds made by an individual welder are required to be tested, magnetic particle testing must be used only in areas inaccessible to ultrasonic testing. Retest defective areas after repair. Submit weld inspection reports.

3.7.2 Direct Tension Indicator Washers

3.7.2.1 Direct Tension Indicator Washer Compression

Direct tension indicator washers must be tested in place to verify that they have been compressed sufficiently to provide the 0.015 inch gap when the direct tension indicator washer is placed under the bolt head and the nut is tightened, and to provide the 0.005 inch gap when the direct tension indicator washer is placed under the turned element, as required by ASTM F959. Submit direct tension indicator washer inspection reports.

3.7.3 High-Strength Bolts

3.7.3.1 Testing Bolt, Nut, and Washer Assemblies

Test a minimum of 3 bolt, nut, and washer assemblies from each mill certificate batch in a tension measuring device at the job site prior to the beginning of bolting start-up. Demonstrate that the bolts and nuts, when used together, can develop tension not less than the provisions specified in AISC 360, depending on bolt size and grade. The bolt tension must be developed by tightening the nut. A representative of the manufacturer or supplier must be present to ensure that the fasteners are properly used, and to demonstrate that the fastener assemblies supplied satisfy the specified requirements. Submit bolt testing reports.

3.7.3.2 Inspection

Inspection procedures must be in accordance with AISC 360. Confirm and report to the Contracting Officer that the materials meet the project specification and that they are properly stored. Confirm that the faying surfaces have been properly prepared before the connections are assembled. Observe the specified job site testing and calibration, and confirm that the procedure to be used provides the required tension. Monitor the work to ensure the testing procedures are routinely followed on joints that are specified to be fully tensioned.

Inspection by Contractor's inspector shall include calibration of torque wrenches for high-strength bolts.

Inspect calibration of torque wrenches for high-strength bolts.

3.7.3.3 Testing

The Government has the option to perform nondestructive tests on 5 percent of the installed bolts to verify compliance with pre-load bolt tension requirements. Provide the required access for the Government to perform the tests. The nondestructive testing will be done in-place using an ultrasonic measuring device or any other device capable of determining in-place pre-load bolt tension. The test locations must be selected by the Contracting Officer. If more than 10 percent of the bolts tested contain defects identified by testing, then all bolts used from the batch from which the tested bolts were taken, must be tested at the Contractor's expense. Retest new bolts after installation at the Contractor's expense.

-- End of Section --

SECTION 05 50 13

MISCELLANEOUS METAL FABRICATIONS
05/10

PART 1 GENERAL

1.1 REFERENCES

The publications listed below form a part of this specification to the extent referenced. The publications are referred to within the text by the basic designation only.

ALUMINUM ASSOCIATION (AA)

AA DAF45	(2003; Reaffirmed 2009) Designation System for Aluminum Finishes

AMERICAN INSTITUTE OF STEEL CONSTRUCTION (AISC)

AISC 303	(2010) Code of Standard Practice for Steel Buildings and Bridges

AMERICAN SOCIETY OF SAFETY ENGINEERS (ASSE/SAFE)

ASSE/SAFE A10.3	(2013) Operations - Safety Requirements for Powder Actuated Fastening Systems

AMERICAN WELDING SOCIETY (AWS)

AWS D1.1/D1.1M	(2015) Structural Welding Code - Steel

ASME INTERNATIONAL (ASME)

ASME B18.2.1	(2012; Errata 2013) Square and Hex Bolts and Screws (Inch Series)
ASME B18.2.2	(2010) Nuts for General Applications: Machine Screw Nuts, Hex, Square, Hex Flange, and Coupling Nuts (Inch Series)
ASME B18.21.1	(2009) Washers: Helical Spring-Lock, Tooth Lock, and Plain Washers (Inch Series)
ASME B18.6.2	(1998; R 2010) Slotted Head Cap Screws, Square Head Set Screws, and Slotted Headless Set Screws: Inch Series
ASME B18.6.3	(2013) Machine Screws, Tapping Screws, and Machine Drive Screws (Inch Series)

ASTM INTERNATIONAL (ASTM)

ASTM A123/A123M	(2013) Standard Specification for Zinc (Hot-Dip Galvanized) Coatings on Iron and Steel Products

ASTM A153/A153M	(2009) Standard Specification for Zinc Coating (Hot-Dip) on Iron and Steel Hardware
ASTM A307	(2014) Standard Specification for Carbon Steel Bolts and Studs, 60 000 PSI Tensile Strength
ASTM A36/A36M	(2014) Standard Specification for Carbon Structural Steel
ASTM A467/A467M	(2007; R 2012) Standard Specification for Machine Coil Chain
ASTM A47/A47M	(1999; R 2014) Standard Specification for Ferritic Malleable Iron Castings
ASTM A48/A48M	(2003; R 2012) Standard Specification for Gray Iron Castings
ASTM A500/A500M	(2013) Standard Specification for Cold-Formed Welded and Seamless Carbon Steel Structural Tubing in Rounds and Shapes
ASTM A53/A53M	(2012) Standard Specification for Pipe, Steel, Black and Hot-Dipped, Zinc-Coated, Welded and Seamless
ASTM A653/A653M	(2015) Standard Specification for Steel Sheet, Zinc-Coated (Galvanized) or Zinc-Iron Alloy-Coated (Galvannealed) by the Hot-Dip Process
ASTM A780/A780M	(2009; R 2015) Standard Practice for Repair of Damaged and Uncoated Areas of Hot-Dip Galvanized Coatings
ASTM A786/A786M	(2005; R 2009) Standard Specification for Hot-Rolled Carbon, Low-Alloy, High-Strength Low-Alloy, and Alloy Steel Floor Plates
ASTM A924/A924M	(2014) Standard Specification for General Requirements for Steel Sheet, Metallic-Coated by the Hot-Dip Process
ASTM B108/B108M	(2015) Standard Specification for Aluminum-Alloy Permanent Mold Castings
ASTM B209	(2014) Standard Specification for Aluminum and Aluminum-Alloy Sheet and Plate
ASTM B221	(2014) Standard Specification for Aluminum and Aluminum-Alloy Extruded Bars, Rods, Wire, Profiles, and Tubes
ASTM B26/B26M	(2014; E 2015) Standard Specification for Aluminum-Alloy Sand Castings

ASTM C1513	(2013) Standard Specification for Steel Tapping Screws for Cold-Formed Steel Framing Connections
ASTM D1187/D1187M	(1997; E 2011; R 2011) Asphalt-Base Emulsions for Use as Protective Coatings for Metal
ASTM F1554	(2007a; E 2011) Standard Specification for Anchor Bolts, Steel, 36, 55, and 105-ksi Yield Strength

MASTER PAINTERS INSTITUTE (MPI)

MPI 79	(Oct 2009) Alkyd Anti-Corrosive Metal Primer

NATIONAL ASSOCIATION OF ARCHITECTURAL METAL MANUFACTURERS (NAAMM)

NAAMM MBG 531	(2009) Metal Bar Grating Manual

SOCIETY FOR PROTECTIVE COATINGS (SSPC)

SSPC SP 3	(1982; E 2004) Power Tool Cleaning
SSPC SP 6/NACE No.3	(2007) Commercial Blast Cleaning

1.2 SUBMITTALS

Government approval is required for submittals with a "G" designation; submittals not having a "G" designation are for Contractor Quality Control approval. When used, a designation following the "G" designation identifies the office that will review the submittal for the Government. Submit the following in accordance with Section 01 33 00 SUBMITTAL PROCEDURES:

SD-02 Shop Drawings

Access doors and panels, installation drawings; G
Floor gratings and roof walkways, installation drawings; G
Embedded angles and plates, installation drawings; G

Submit fabrication drawings showing layout(s), connections to structural system, and anchoring details as specified in AISC 303.

Submit templates, erection and installation drawings indicating thickness, type, grade, class of metal, and dimensions. Show construction details, reinforcement, anchorage, and installation with relation to the building construction.

SD-03 Product Data

Cover plates and frames
Floor gratings and roof walkways; G
Blank Off Panels; G
Brake Metal; G

1.3 QUALIFICATION OF WELDERS

Qualify welders in accordance with AWS D1.1/D1.1M. Use procedures, materials, and equipment of the type required for the work.

1.4 DELIVERY, STORAGE, AND PROTECTION

Protect from corrosion, deformation, and other types of damage. Store items in an enclosed area free from contact with soil and weather. Remove and replace damaged items with new items.

PART 2 PRODUCTS

2.1 MATERIALS

2.1.1 Structural Carbon Steel

ASTM A36/A36M.

2.1.2 Structural Tubing

ASTM A500/A500M.

2.1.3 Steel Pipe

ASTM A53/A53M, Type E or S, Grade B.

2.1.4 Fittings for Steel Pipe

Standard malleable iron fittings ASTM A47/A47M.

2.1.5 Gratings

a. Gray cast iron ASTM A48/A48M, Class 40.

b. Metal plank grating, non-slip requirement, aluminum ASTM B209, 6061-T6; steel ASTM A653/A653M, G90.

c. Metal bar type grating NAAMM MBG 531.

2.1.6 Floor Plates, Patterned

Floor plate ASTM A786/A786M. Steel plate shall not be less than 14 gage.

2.1.7 Anchor Rods

ASTM F1554, Grade 36. Where exposed, shall be of the same material, color, and finish as the metal to which applied.

2.1.7.1 Expansion Anchors and Adhesive Anchors

As indicated on the Drawings.

2.1.7.2 Lag Screws and Bolts

ASME B18.2.1, type and grade best suited for the purpose.

2.1.7.3 Toggle Bolts

ASME B18.2.1.

2.1.7.4 Bolts, Nuts, Studs and Rivets

ASME B18.2.2 or ASTM A307.

2.1.7.5 Powder Actuated Fasteners

Follow safety provisions of ASSE/SAFE A10.3.

2.1.7.6 Screws

ASME B18.2.1, ASME B18.6.2, ASME B18.6.3 and ASTM C1513.

2.1.7.7 Washers

Provide plain washers to conform to ASME B18.21.1. Provide beveled washers for American Standard beams and channels, square or rectangular, tapered in thickness, and smooth. Provide lock washers to conform to ASME B18.21.1.

2.1.8 Aluminum Alloy Products

Conform to ASTM B209 for sheet plate, ASTM B221 for extrusions and ASTM B26/B26M or ASTM B108/B108M for castings, as applicable. Provide aluminum extrusions at least 1/8 inch thick and aluminum plate or sheet at least 0.050 inch thick.

2.2 FABRICATION FINISHES

2.2.1 Galvanizing

Hot-dip galvanize items specified to be zinc-coated, after fabrication where practicable. Galvanizing: ASTM A123/A123M, ASTM A153/A153M, ASTM A653/A653M or ASTM A924/A924M, G90, as applicable.

2.2.2 Galvanize

Anchor bolts, grating fasteners, washers, and parts or devices necessary for proper installation, unless indicated otherwise.

2.2.3 Repair of Zinc-Coated Surfaces

Repair damaged surfaces with galvanizing repair method and paint conforming to ASTM A780/A780M or by application of stick or thick paste material specifically designed for repair of galvanizing, as approved by Contracting Officer. Clean areas to be repaired and remove slag from welds. Heat surfaces to which stick or paste material is applied, with a torch to a temperature sufficient to melt the metallics in stick or paste; spread molten material uniformly over surfaces to be coated and wipe off excess material.

2.2.4 Shop Cleaning and Painting

2.2.4.1 Surface Preparation

Blast clean surfaces in accordance with SSPC SP 6/NACE No.3. Surfaces

that will be exposed in spaces above ceiling or in attic spaces, crawl spaces, furred spaces, and chases may be cleaned in accordance with SSPC SP 3 in lieu of being blast cleaned. Wash cleaned surfaces which become contaminated with rust, dirt, oil, grease, or other contaminants with solvents until thoroughly clean. Steel to be embedded in concrete shall be free of dirt and grease. Do not paint or galvanize bearing surfaces, including contact surfaces within slip critical joints, but coat with rust preventative applied in the shop.

2.2.4.2 Pretreatment, Priming and Painting

Apply pretreatment, primer, and paint in accordance with manufacturer's printed instructions.

2.2.5 Nonferrous Metal Surfaces

Protect by plating, anodic, or organic coatings.

2.2.6 Aluminum Surfaces

2.2.6.1 Surface Condition

Before finishes are applied, remove roll marks, scratches, rolled-in scratches, kinks, stains, pits, orange peel, die marks, structural streaks, and other defects which will affect uniform appearance of finished surfaces.

2.2.6.2 Aluminum Finishes

Unexposed sheet, plate and extrusions may have mill finish as fabricated. Sandblast castings' finish, medium, AA DAF45. Unless otherwise specified, provide all other aluminum items with a standard mill finish. Provide a coating thickness not less than that specified for protective and decorative type finishes for items used in interior locations or architectural Class I type finish for items used in exterior locations in AA DAF45. Provide a polished satin finish on items to be anodized.

2.3 ACCESS DOORS AND PANELS

Provide flush type access doors and panels unless otherwise indicated. Fabricate frames for access doors of steel not lighter than 14 gage with welded joints and anchorage for securing into construction. Provide access doors with a minimum of 14 by 20 inches and of not lighter than 14 gage steel, with stiffened edges and welded attachments. Provide access doors hinged to frame and with a flush-face, turn-screw-operated latch. Provide exposed metal surfaces with a shop applied prime coat.

2.4 CORNER GUARDS AND SHIELDS

For jambs and sills of openings and edges of platforms provide steel shapes and plates anchored in masonry or concrete with welded steel straps or end-weld stud anchors. Form corner guards for use with glazed or ceramic tile finish on walls with 0.0625 inch thick corrosion-resisting steel with polished or satin finish, extend 5 feet above the top of cove base or to the top of the wainscot, whichever is less, and securely anchor to the supporting wall. Corner guards on exterior shall be galvanized.

2.5 COVER PLATES AND FRAMES

Fabricate cover plates of 1/4 inch thick rolled steel weighing not more than 100 pounds per plate with a selected raised pattern nonslip top surface . Plate shall be galvanized . Reinforce to sustain a live load of 100 pounds per square foot. Frames shall be structural steel shapes and plates, with bent steel bars or headed anchors welded to frame for anchoring to concrete securely or fastened to the structure as indicated. Miter and weld all corners. Butt joint straight runs. Allow for expansion on straight runs over 15 feet. Provide flush drop handles for removal formed from 1/4 inch round stock where indicated. Provide holes and openings with 1/2 inch clearance for pipes and equipment. Remove sharp edges and burrs from cover plates and exposed edges of frames. Weld all connections and grind top surface smooth. Weld bar stops every six inches. Provide 1/8 inch clearance at edges and between cover plates.

2.6 FLOOR GRATINGS AND ROOF WALKWAYS

Design steel grating in accordance with NAAMM MBG 531 for bar type grating or manufacturer's charts for plank grating. Galvanize steel floor gratings.

a. Design floor gratings to support a live load as indicated on the Drawings for the spans indicated, with maximum deflection of L/240.

b. Attach gratings to structural members with welded-on anchors. Anchor gratings to structural members with bolts, toggle bolts, or expansion shields and bolts. Attach grating as per manufacturer's roof attachment system.

c. Slip resistance requirements must exceed both wet and dry a static coefficient of friction of 0.6.

d. Rooftop walkway: Minimum 2 feet wide, 14 gage, ASTM A653/A653M, G-90, steel with slip resistant surface. Furnish all brackets, connectors and other accessories. Support at minimum 5 foot intervals on hard rubber pads in accordance with manufacturers instructions.

2.7 BLANK-OFF PANELS

Provide non-insulating blank off panels with aluminum skin with Kynar paint applied as detailed on Drawings. Attachment type shall be mechanical fastners as recommended by manufacturer.

Blank off panels construction shall be single sheet; provide gasket materials for complete closed installation.

2.8 GUARD POSTS (BOLLARDS/PIPE GUARDS)

Provide galvanized schedule 40 standard weight steel pipe as specified in ASTM A53/A53M. Anchor posts in concrete and fill solidly with concrete with minimum compressive strength of 3500 psi. Prime bollard with zinc-rich primer and finish with safety yellow paint.

2.9 MISCELLANEOUS PLATES AND SHAPES

Provide for items that do not form a part of the structural steel framework, such as lintels, sill angles, miscellaneous mountings and frames. Provide lintels fabricated from structural steel shapes over

openings in masonry walls and partitions as required to support wall loads over openings. Provide with connections and fasteners and welds. Construct to have at least 8 inches bearing on masonry at each end.

Provide angles and plates, ASTM A36/A36M, for embedment as indicated. Galvanize embedded items exposed to the elements according to ASTM A123/A123M.

Aluminum brake metal shall have clear annodized finish. Refer to Drawings for details for bends.

2.10 SAFETY CHAINS

Construct safety chains of galvanized steel, straight link type, 3/16 inch diameter, with at least twelve links per foot, and with snap hooks on each end. Test safety chain in accordance with ASTM A467/A467M, Class CS. Provide snap hooks of boat type. Provide galvanized 3/8 inch bolt with 3/4 inch eye diameter for attachment of chain, anchored as indicated. Supply two chains, 4 inches longer than the anchorage spacing, for each guarded area. Locate safety chain where indicated. Mount the lower chain 6 inches above the floor and mount the top chain 2 feet above the floor.

PART 3 EXECUTION

3.1 GENERAL INSTALLATION REQUIREMENTS

Install items at locations indicated, according to manufacturer's instructions. Verify all measurements and take all field measurements necessary before fabrication. Exposed fastenings shall be compatible materials, shall generally match in color and finish, and harmonize with the material to which fastenings are applied. Include materials and parts necessary to complete each item, even though such work is not definitely shown or specified. Poor matching of holes for fasteners shall be cause for rejection. Conceal fastenings where practicable. Thickness of metal and details of assembly and supports shall provide strength and stiffness. Form joints exposed to the weather shall be formed to exclude water. Items listed below require additional procedures.

3.2 WORKMANSHIP

Provide miscellaneous metalwork that is well formed to shape and size, with sharp lines and angles and true curves. Drilling and punching shall produce clean true lines and surfaces. Provide continuous welding along the entire area of contact except where tack welding is permitted. Do not tack weld exposed connections of work in place and ground smooth. Provide a smooth finish on exposed surfaces of work in place and unless otherwise approved, flush exposed riveting. Mill joints where tight fits are required. Corner joints shall be coped or mitered, well formed, and in true alignment. Accurately set work to established lines and elevations and securely fastened in place. Install in accordance with manufacturer's installation instructions and approved drawings, cuts, and details.

3.3 ANCHORAGE, FASTENINGS, AND CONNECTIONS

Provide anchorage where necessary for fastening miscellaneous metal items securely in place. Include for anchorage not otherwise specified or indicated slotted inserts, expansion shields, and powder-driven fasteners, when approved for concrete; toggle bolts and through bolts for masonry; machine and carriage bolts for steel; through bolts, lag bolts, and screws

for wood. Do not use wood plugs in any material. Provide non-ferrous attachments for non-ferrous metal. Make exposed fastenings of compatible materials, generally matching in color and finish, to which fastenings are applied. Conceal fastenings where practicable.

3.4 BUILT-IN WORK

Form for anchorage metal work built-in with concrete or masonry, or provide with suitable anchoring devices as indicated or as required. Furnish metal work in ample time for securing in place as the work progresses.

3.5 WELDING

Perform welding, welding inspection, and corrective welding, in accordance with AWS D1.1/D1.1M. Use continuous welds on all exposed connections. Grind visible welds smooth in the finished installation.

3.6 FINISHES

3.6.1 Dissimilar Materials

Where dissimilar metals are in contact, protect surfaces with a coat conforming to MPI 79 to prevent galvanic or corrosive action. Where aluminum is in contact with concrete, plaster, mortar, masonry, wood, or absorptive materials subject to wetting, protect with ASTM D1187/D1187M, asphalt-base emulsion.

3.6.2 Environmental Conditions

Do not clean or paint surface when damp or exposed to foggy or rainy weather, when metallic surface temperature is less than 5 degrees F above the dew point of the surrounding air, or when surface temperature is below 45 degrees F or over 95 degrees F, unless approved by the Contracting Officer.

3.7 ACCESS PANELS

Install a removable access panel not less than 12 by 12 inches directly below each valve, flow indicator, damper, or air splitter that is located above the ceiling, other than an acoustical ceiling, and that would otherwise not be accessible.

3.8 COVER PLATES AND FRAMES

Install the tops of cover plates and frames flush with floor.

3.9 INSTALLATION OF GUARD POSTS (BOLLARDS/PIPE GUARDS)

Set pipe guards vertically in concrete piers. Construct piers of, and the hollow cores of the pipe filled with, concrete having a compressive strength of 3500 psi.

3.10 MOUNTING OF SAFETY CHAINS

Mount safety chains 3 feet 6 inches and 2 feet above the floor.

-- End of Section --

THIS PAGE HAS BEEN INTENTIONALLY LEFT BLANK

SECTION 05 52 00

METAL RAILINGS
08/15

PART 1 GENERAL

1.1 REFERENCES

The publications listed below form a part of this specification to the extent referenced. The publications are referred to within the text by the basic designation only.

AMERICAN ASSOCIATION OF STATE HIGHWAY AND TRANSPORTATION OFFICIALS (AASHTO)

AASHTO M 314	(1990; R 2013) Standard Specification for Steel Anchor Bolts

AMERICAN WELDING SOCIETY (AWS)

AWS D1.1/D1.1M	(2015) Structural Welding Code - Steel

ASME INTERNATIONAL (ASME)

ASME B18.2.1	(2012; Errata 2013) Square and Hex Bolts and Screws (Inch Series)
ASME B18.21.1	(2009) Washers: Helical Spring-Lock, Tooth Lock, and Plain Washers (Inch Series)
ASME B18.6.1	(1981; R 2008) Wood Screws (Inch Series)
ASME B18.6.3	(2013) Machine Screws, Tapping Screws, and Machine Drive Screws (Inch Series)

ASTM INTERNATIONAL (ASTM)

ASTM A108	(2013) Standard Specification for Steel Bar, Carbon and Alloy, Cold-Finished
ASTM A123/A123M	(2013) Standard Specification for Zinc (Hot-Dip Galvanized) Coatings on Iron and Steel Products
ASTM A153/A153M	(2009) Standard Specification for Zinc Coating (Hot-Dip) on Iron and Steel Hardware
ASTM A27/A27M	(2013) Standard Specification for Steel Castings, Carbon, for General Application
ASTM A283/A283M	(2013) Standard Specification for Low and Intermediate Tensile Strength Carbon Steel Plates
ASTM A307	(2014) Standard Specification for Carbon Steel Bolts and Studs, 60 000 PSI Tensile

	Strength
ASTM A325	(2014) Standard Specification for Structural Bolts, Steel, Heat Treated, 120/105 ksi Minimum Tensile Strength
ASTM A36/A36M	(2014) Standard Specification for Carbon Structural Steel
ASTM A449	(2014) Standard Specification for Hex Cap Screws, Bolts, and Studs, Steel, Heat Treated, 120/105/90 ksi Minimum Tensile Strength, General Use
ASTM A467/A467M	(2007; R 2012) Standard Specification for Machine Coil Chain
ASTM A47/A47M	(1999; R 2014) Standard Specification for Ferritic Malleable Iron Castings
ASTM A500/A500M	(2013) Standard Specification for Cold-Formed Welded and Seamless Carbon Steel Structural Tubing in Rounds and Shapes
ASTM A512	(2006) Standard Specification for Cold-Drawn Buttweld Carbon Steel Mechanical Tubing
ASTM A53/A53M	(2012) Standard Specification for Pipe, Steel, Black and Hot-Dipped, Zinc-Coated, Welded and Seamless
ASTM A575	(1996; E 2013; R 2013) Standard Specification for Steel Bars, Carbon, Merchant Quality, M-Grades
ASTM C514	(2004; R 2014) Standard Specification for Nails for the Application of Gypsum Board
ASTM C636/C636M	(2013) Standard Practice for Installation of Metal Ceiling Suspension Systems for Acoustical Tile and Lay-In Panels
ASTM E488/E488M	(2015) Standard Test Methods for Strength of Anchors in Concrete and Masonry Elements

NATIONAL ASSOCIATION OF ARCHITECTURAL METAL MANUFACTURERS (NAAMM)

NAAMM AMP 521	(2001) Pipe Railing Manual

1.2 ADMINISTRATIVE REQUIREMENTS

1.2.1 Pre-Installation Meetings

Within 30 days of Contract Award, submit fabrication drawings to the Contracting Officer for the following items:

a. Iron and Steel Hardware

b. Steel Shapes, Plates, Bars and Strips

c. Steel Railings and Handrails

d. Anchorage and fastening systems

Submit manufacturer's catalog data, including two copies of manufacturers specifications, load tables, dimension diagrams, and anchor details for the following items:

a. Structural steel plates, shapes, and bars

b. Structural steel tubing

c. Cold finished steel bars

d. Hot-Rolled carbon steel bars

e. Cold-Drawn steel tubing

f. Concrete inserts

g. Masonry anchorage devices

h. Protective coating

i. Steel railings and handrails

j. Anchorage and fastening systems

1.3 SUBMITTALS

Government approval is required for submittals with a "G" designation; submittals not having a "G" designation are for Contractor Quality Control approval. Submit the following in accordance with Section 01 33 00 SUBMITTAL PROCEDURES:

SD-02 Shop Drawings

Fabrication Drawings; G
Iron and Steel Hardware
Steel Shapes, Plates, Bars and Strips

SD-03 Product Data

Structural Steel Plates, Shapes, and Bars; G
Structural Steel Tubing; G
Cold-Finished Steel Bars; G
Hot-Rolled Carbon Steel Bars; G
Cold-Drawn Steel Tubing; G
Concrete Inserts; G
Masonry Anchorage Devices; G
Protective Coating; G
Steel Railings and Handrails; G
Anchorage and Fastening Systems; G

SD-07 Certificates

Welding Procedures
Welder Qualification

SD-08 Manufacturer's Instructions

Installation Instructions

1.4 QUALITY CONTROL

1.4.1 Welding Procedures

Submit welding procedures testing in accordance with AWS D1.1/D1.1M made in the presence of the Contracting Officer and by an approved testing laboratory at the Contractor's expense.

1.4.2 Welder Qualification

Submit certified welder qualification by tests in accordance with AWS D1.1/D1.1M, or under an equivalent approved qualification test. In addition perform tests on test pieces in positions and with clearances equivalent to those actually encountered. If a test weld fails to meet requirements, make an immediate retest of two test welds and ensure each test weld passes. Failure in the immediate retest will require that the welder be retested after further practice or training and make a complete set of test welds.

PART 2 PRODUCTS

2.1 FABRICATION

Pre-assemble items in the shop to the greatest extent possible. Disassemble units only to the extent necessary for shipping and handling. Clearly mark units for reassembly and coordinated installation.

For the fabrication of work exposed to view, use only materials that are smooth and free of surface blemishes, including pitting, seam marks, roller marks, rolled trade names, and roughness. Remove blemishes by grinding, or by welding and grinding, prior to cleaning, treating, and application of surface finishes, including zinc coatings.

Provide railings and handrails detail plans and elevations at not less than 1-inch to 1-foot. Provide details of sections and connections at not less than 3-inches to 1-foot. Also detail setting drawings, diagrams, templates for installation of anchorages, including concrete inserts, anchor bolts, and miscellaneous metal items having integral anchors.

Use materials of size and thicknesses indicated or, if not indicated, of required size and thickness to produce adequate strength and durability in finished product for intended use. Work materials to dimensions indicated on approved detail drawings, using proven details of fabrication and support. Use type of materials indicated or specified for the various components of work.

Form exposed work true to line and level with accurate angles and surfaces and straight sharp edges. Ensure all exposed edges are eased to a radius of approximately 1/32-inch. Bend metal corners to the smallest radius possible without causing grain separation or otherwise impairing the work.

Weld corners and seams continuously and in accordance with the

recommendations of AWS D1.1/D1.1M. Grind exposed welds smooth and flush to match and blend with adjoining surfaces.

Form exposed connections with hairline joints that are flush and smooth, using concealed fasteners wherever possible. Use exposed fasteners of the type indicated or, if not indicated, use Phillips flathead (countersunk) screws or bolts.

Provide anchorage of the type indicated and coordinated with the supporting structure. Fabricate anchoring devices and space as indicated and as required to provide adequate support for the intended use of the work.

Use hot-rolled steel bars for work fabricated from bar stock unless work is indicated or specified to be fabricated from cold-finished or cold-rolled stock.

2.1.1 Steel Handrails

Fabricate joint posts, rail, and corners by one of the following methods:

a. Flush-type rail fittings of commercial standard, welded and ground smooth with railing splice locks secured with 3/8 inch hexagonal-recessed-head setscrews.

b. Mitered and welded joints made by fitting post to top rail and intermediate rail to post, mitering corners, groove welding joints, and grinding smooth. Butt railing splices and reinforce them by a tight fitting interior sleeve not less than 6 inches long.

c. Railings may be bent at corners in lieu of jointing, provided bends are made in suitable jigs and the pipe is not crushed.

Provide removable sections as indicated.

2.1.2 Protective Coating

Shop prime the steelwork as indicated in accordance with Section 09 90 00 PAINTS AND COATINGS except surfaces of steel that are:

a. encased in concrete

b. surfaces for welding

c. high-strength bolt connected contact surfaces

Provide hot dipped galvanized steelwork as indicated in accordance with ASTM A123/A123M. Touch up abraded surfaces and cut ends of galvanized members with zinc-dust, zinc-oxide primer, or an approved galvanizing repair compound.

2.2 COMPONENTS

2.2.1 Structural Steel Plates, Shapes And Bars

Provide structural-size shapes and plates, except plates to be bent or cold-formed, conforming to ASTM A36/A36M, unless otherwise noted.

Provide steel plates, to be bent or cold-formed,conforming to

ASTM A283/A283M, Grade C.

Provide steel bars and bar-size shapes conforming to ASTM A36/A36M, unless otherwise noted.

2.2.2 Structural Steel Tubing

Provide structural steel tubing, hot-formed, welded or seamless, conforming to ASTM A500/A500M, Grade B, unless otherwise noted.

2.2.3 Hot-Rolled Carbon Steel Bars

Provide bars and bar-size shapes conforming to ASTM A575, grade as selected by the fabricator.

2.2.4 Cold-Finished Steel Bars

Provide cold-finished steel bars conforming to ASTM A108, grade as selected by the fabricator.

2.2.5 Cold-Drawn Steel Tubing

Provide tubing conforming to ASTM A512, sunk drawn, butt-welded, cold-finished, and stress-relieved.

2.2.6 Steel Pipe

Provide pipe conforming to ASTM A53/A53M, type as selected, Grade B; primed finish, unless galvanizing is required; standard weight (Schedule 40).

2.2.7 Concrete Inserts

Provide threaded-type concrete inserts consisting of galvanized ferrous castings, internally threaded to receive 3/4-inch diameter machine bolts; either malleable iron conforming to ASTM A47/A47M or cast steel conforming to ASTM A27/A27M, hot-dip galvanized in accordance with ASTM A153/A153M.

Provide wedge-type concrete inserts consisting of galvanized box-type ferrous castings designed to accept 3/4-inch diameter bolts having special wedge-shaped heads, made of either malleable iron conforming to ASTM A47/A47M or cast steel conforming to ASTM A27/A27M and hot-dip galvanized in accordance with ASTM A153/A153M.

Provide carbon steel bolts having special wedge-shaped heads, nuts, washers, and shims, galvanized in accordance with ASTM A153/A153M. Provide slotted-type concrete inserts consisting of galvanized 1/8-inchthick pressed steel plate conforming to ASTM A283/A283M, made of box-type welded construction with slot designed to receive 3/4-inch diameter square-head bolt with knockout cover; and hot-dip galvanized in accordance with ASTM A123/A123M.

2.2.8 Masonry Anchorage Devices

Provide masonry anchorage devices consisting of expansion shields complying with AASHTO M 314, ASTM E488/E488M and ASTM C514 as follows:

a. Provide lead expansion shields for machine screws and bolts 1/4-inch and smaller; head-out embedded nut type, single unit class,

Group I, Type 1, Class 1.

b. Provide lead expansion shields for machine screws and bolts larger than 1/4 inch in size; head-out embedded nut type, multiple unit class, Group I, Type 1, Class 2.

c. Provide bolt anchor expansion shields for lag bolts; zinc-alloy, long shield anchors class, Group II, Type 1, Class 1.

d. Provide bolt anchor expansion shields for bolts; closed-end bottom bearing class, Group II, Type 2, Class 1.

Provide tumble-wing type toggle bolts conforming to ASTM A325, ASTM A449 and ASTM C636/C636M, type, class, and style as required.

2.2.9 Fasteners

Provide galvanized zinc-coated fasteners in accordance with ASTM A153/A153M used for exterior applications or where built into exterior walls or floor systems. Select fasteners for the type, grade, and class required for the installation of steel stair items.

Provide standard hexagon-head bolts, conforming to ASTM A307, Grade A.

Provide square-head lag bolts conforming to ASME B18.2.1.

Provide cadmium-plated steel machine screws conforming to ASME B18.6.3.

Provide flat-head carbon steel wood screws conforming to ASME B18.6.1.

Provide plain round, general-assembly-grade, carbon steel washers conforming to ASME B18.21.1.

Provide helical spring, carbon steel lockwashers conforming to ASME B18.2.1.

2.2.10 Steel Railings And Handrails

Design handrails to resist a concentrated load of 250 lbs in any direction at any point of the top of the rail or 50 lbs per foot applied horizontally to top of the rail, whichever is more severe. NAAMM AMP 521, provide the same size rail and post. Provide pipe collars of the same material and finish as the handrail and posts.

2.2.10.1 Steel Handrails

Provide steel handrails, including inserts in concrete, steel pipe conforming to ASTM A53/A53M or structural tubing conforming to ASTM A500/A500M, Grade A or B of equivalent strength. Provide steel railings of 1-1/2 -inches nominal size, hot-dip galvanized or shop painted as applicable.

Provide kickplates between railing posts where indicated, and consist ofo 1/8-inch steel flat bars not less than 6-inches high. Secure kickplates as indicated.

Galvanize exterior railings, including pipe, fittings, brackets, fasteners, and other ferrous metal components. Provide black steel pipe for interior railings.

2.2.11 Safety Chains And Guardrails

Provide safety chains of galvanized steel, straight link type, 3/16-inch diameter, with at least twelve links per foot, and with snap hooks on each end. Test safety chain in accordance with ASTM A467/A467M, Class CS. Provide snap hooks of boat type. Provide galvanized 3/8-inch bolt with 3/4-inch eye diameter for attachment of chain, anchored as indicated. Supply two chains, 4-inches longer than the anchorage spacing, for each guarded area. Locate guard rails safety chain where indicated. Mount the lower chain feet 6 inches above the floor and mount the top chain 2 feet above the floor.

PART 3 EXECUTION

3.1 PREPARATION

Adjust stair railings and handrails prior to securing in place to ensure proper matching at butting joints and correct alignment throughout their length. Space posts not more than 5-feet on center. Plumb posts in each direction. Secure posts and rail ends to building construction as follows:

a. Anchor posts in concrete by means of pipe sleeves set and anchored into concrete. Provide sleeves of galvanized, standard weight, steel pipe, not less than 6-inches long, and having an inside diameter not less than 1/2-inch greater than the outside diameter of the inserted pipe post. Provide steel plate closure secured to the bottom of the sleeve, with closure width and length not less than 1-inch greater than the outside diameter of the sleeve. After posts have been inserted into sleeves, fill the annular space between post and sleeve with molten lead, sulfur, or a quick-setting hydraulic cement. Cover anchorage joint with a round steel flange welded to the post.

b. Anchor posts to steel with steel oval flanges, angle type or floor type as required by conditions, welded to posts and bolted to the steel supporting members.

c. Anchor rail ends into concrete and masonry with steel round flanges welded to rail ends and anchored into the wall construction with lead expansion shields and bolts.

d. Anchor rail ends to steel with steel oval or round flanges welded to tail ends and bolted to the structural steel members.

Secure handrails to walls by means of wall brackets and wall return fitting at handrail ends. Provide brackets of malleable iron castings, with not less than 3-inch projection from the finish wall surface to the center of the pipe drilled to receive one 3/8-inch bolt. Locate brackets not more than 60-inches on center. Provide wall return fittings of cast iron castings, flush-type, with the same projection as that specified for wall brackets. Secure wall brackets and wall return fittings to building construction as follows:

a. For concrete and solid masonry anchorage, use bolt anchor expansion shields and lag bolts.

b. For hollow masonry and stud partition anchorage, use toggle bolts having square heads.

Install toe boards and brackets where indicated. Make splices, where

required, at expansion joints. Install removable sections as indicated.

3.2 INSTALLATION

Submit manufacturer's installation instructions for the following products to be used in the fabrication of steel stair railing and hand rail work:

a. Structural steel plates, shapes, and bars

b. Structural steel tubing

c. Cold finished steel bars

d. Hot-Rolled carbon steel bars

e. Cold-Drawn steel tubing

f. Protective coating

g. Masonry anchorage devices

h. Steel railings and handrails

i. Anchorage and fastening systems

Provide complete, detailed fabrication and installation drawings for all iron and steel hardware, and for all steel shapes, plates, bars and strips used in accordance with the design specifications referenced in this section.

3.2.1 Steel Handrail

Install in pipe sleeves embedded in concrete and filled with non-shrink grout or quick setting anchoring cement with anchorage covered with standard pipe collar pinned to post or masonry with expansion shields and bolts or toggle bolts.by means of base plates bolted to stringers or structural steel frame work. Secure rail ends by steel pipe flanges anchored by expansion shields and bolts or through-bolted to a back plate or by 1/4 inch lag bolts to studs or solid backing.

3.2.2 Touchup Painting

Immediately after installation, clean field welds, bolted connections, abraded areas of the shop paint, and exposed areas painted with the paint used for shop painting. Apply paint by brush or spray to provide a minimum dry-film thickness of 2-mils.

3.3 FIELD QUALITY CONTROL

3.3.1 Field Welding

Ensure procedures of manual shielded metal arc welding, appearance and quality of welds made, and methods used in correcting welding work comply with AWS D1.1/D1.1M.

-- End of Section --

THIS PAGE HAS BEEN INTENTIONALLY LEFT BLANK

SECTION 07 41 13

METAL ROOF PANELS
05/11

PART 1 GENERAL

1.1 REFERENCES

The publications listed below form a part of this specification to the extent referenced. The publications are referred to within the text by the basic designation only.

ALUMINUM ASSOCIATION (AA)

AA ADM	(2015) Aluminum Design Manual

AMERICAN INSTITUTE OF STEEL CONSTRUCTION (AISC)

AISC 341	(2010) Seismic Provisions for Structural Steel Buildings

AMERICAN IRON AND STEEL INSTITUTE (AISI)

AISI S100	(2012) North American Specification for the Design of Cold-Formed Steel Structural Members
AISI SG03-3	(2002; Suppl 2001-2004; R 2008) Cold-Formed Steel Design Manual Set

AMERICAN SOCIETY OF CIVIL ENGINEERS (ASCE)

ASCE 7	(2010; Errata 2011; Supp 1 2013) Minimum Design Loads for Buildings and Other Structures

AMERICAN WELDING SOCIETY (AWS)

AWS A5.1/A5.1M	(2012) Specification for Carbon Steel Electrodes for Shielded Metal Arc Welding
AWS D1.1/D1.1M	(2015) Structural Welding Code - Steel
AWS D1.2/D1.2M	(2014) Structural Welding Code - Aluminum

ASTM INTERNATIONAL (ASTM)

ASTM A1008/A1008M	(2015) Standard Specification for Steel, Sheet, Cold-Rolled, Carbon, Structural, High-Strength Low-Alloy and High-Strength Low-Alloy with Improved Formability, Solution Hardened, and Bake Hardened
ASTM A123/A123M	(2013) Standard Specification for Zinc (Hot-Dip Galvanized) Coatings on Iron and Steel Products

ASTM A36/A36M	(2014) Standard Specification for Carbon Structural Steel
ASTM A463/A463M	(2010; R 2015) Standard Specification for Steel Sheet, Aluminum-Coated, by the Hot-Dip Process
ASTM A653/A653M	(2015) Standard Specification for Steel Sheet, Zinc-Coated (Galvanized) or Zinc-Iron Alloy-Coated (Galvannealed) by the Hot-Dip Process
ASTM A755/A755M	(2015) Standard Specification for Steel Sheet, Metallic Coated by the Hot-Dip Process and Prepainted by the Coil-Coating Process for Exterior Exposed Building Products
ASTM A924/A924M	(2014) Standard Specification for General Requirements for Steel Sheet, Metallic-Coated by the Hot-Dip Process
ASTM B117	(2011) Standard Practice for Operating Salt Spray (Fog) Apparatus
ASTM B209	(2014) Standard Specification for Aluminum and Aluminum-Alloy Sheet and Plate
ASTM C792	(2004; R 2008) Effects of Heat Aging on Weight Loss, Cracking, and Chalking of Elastomeric Sealants
ASTM C920	(2014a) Standard Specification for Elastomeric Joint Sealants
ASTM D1056	(2014) Standard Specification for Flexible Cellular Materials - Sponge or Expanded Rubber
ASTM D1308	(2013) Effect of Household Chemicals on Clear and Pigmented Organic Finishes
ASTM D1654	(2008) Evaluation of Painted or Coated Specimens Subjected to Corrosive Environments
ASTM D1667	(2005; R 2011) Flexible Cellular Materials - Poly (Vinyl Chloride) Foam (Closed-Cell)
ASTM D2244	(2015a) Calculation of Color Tolerances and Color Differences from Instrumentally Measured Color Coordinates
ASTM D2247	(2015) Testing Water Resistance of Coatings in 100% Relative Humidity
ASTM D2794	(1993; R 2010) Resistance of Organic Coatings to the Effects of Rapid Deformation (Impact)

ASTM D3359	(2009; E 2010; R 2010) Measuring Adhesion by Tape Test
ASTM D3363	(2005; E 2011; R 2011; E 2012) Film Hardness by Pencil Test
ASTM D4214	(2007; R 2015) Standard Test Method for Evaluating the Degree of Chalking of Exterior Paint Films
ASTM D4587	(2011) Standard Practice for Fluorescent UV-Condensation Exposures of Paint and Related Coatings
ASTM D522/D522M	(2014) Mandrel Bend Test of Attached Organic Coatings
ASTM D523	(2014) Standard Test Method for Specular Gloss
ASTM D5894	(2010) Cyclic Salt Fog/UV Exposure of Painted Metal, (Alternating Exposures in a Fog/Dry Cabinet and a UV/Condensation Cabinet)
ASTM D610	(2008; R 2012) Evaluating Degree of Rusting on Painted Steel Surfaces
ASTM D714	(2002; R 2009) Evaluating Degree of Blistering of Paints
ASTM D822	(2001; R 2006) Filtered Open-Flame Carbon-Arc Exposures of Paint and Related Coatings
ASTM D968	(2015) Abrasion Resistance of Organic Coatings by Falling Abrasive
ASTM E1592	(2005; R 2012) Structural Performance of Sheet Metal Roof and Siding Systems by Uniform Static Air Pressure Difference
ASTM E2140	(2001; R 2009) Standard Test Method for Water Penetration of Metal Roof Panel Systems by Static Water Pressure Head
ASTM E84	(2015b) Standard Test Method for Surface Burning Characteristics of Building Materials
ASTM G152	(2013) Operating Open Flame Carbon Arc Light Apparatus for Exposure of Nonmetallic Materials
ASTM G153	(2013) Operating Enclosed Carbon Arc Light Apparatus for Exposure of Nonmetallic Materials

FM GLOBAL (FM)

FM 4471	(2010) Class I Panel Roofs

METAL BUILDING MANUFACTURERS ASSOCIATION (MBMA)

MBMA RSDM	(2000) Metal Roofing Systems Design Manual

NATIONAL ROOFING CONTRACTORS ASSOCIATION (NRCA)

NRCA 0420	(2010) Architectural Metal Flashing, Condensation Control and Reroofing
NRCA RoofMan	(2011 thru 2014) The NRCA Roofing Manual

SHEET METAL AND AIR CONDITIONING CONTRACTORS' NATIONAL ASSOCIATION (SMACNA)

SMACNA 1793	(2012) Architectural Sheet Metal Manual, 7th Edition

UNDERWRITERS LABORATORIES (UL)

UL 580	(2006; Reprint Oct 2013) Tests for Uplift Resistance of Roof Assemblies
UL Bld Mat Dir	(2012) Building Materials Directory

1.2 DESCRIPTION OF METAL ROOF SYSTEM

1.2.1 Performance Requirements

Steel panels and accessory components must conform to the following standards:

ASTM A1008/A1008M
ASTM A123/A123M
ASTM A36/A36M
ASTM A463/A463M for aluminum coated steel sheet
ASTM A755/A755M for metallic coated steel sheet for exterior coil prepainted applications.
ASTM A924/A924M for metallic coated steel sheet
ASTM D522/D522M for applied coatings
UL Bld Mat Dir

1.2.1.1 Hydrostatic Head Resistance

No water penetration when tested according to ASTM E2140. Submit leakage test report upon completion of installation.

1.2.1.2 Wind Uplift Resistance

Provide metal roof panel system that conform to the requirements of ASTM E1592 and UL 580. Uplift force due to wind action governs the design for panels. Submit wind uplift test report prior to commencing installation.

Roof system and attachments must resist the wind loads as determined by ASCE 7, in pounds per square foot. Metal roof panels and component

materials must also comply with the requirements in FM 4471 as part of a panel roofing system as listed in Factory Mutual Guide (FMG) "Approval Guide" for class 1 or noncombustible construction, as applicable. Identify all materials with FMG markings.

1.3 SUBMITTALS

Government approval is required for submittals with a "G" designation; submittals not having a "G" designation are for Contractor Quality Control approval. Submit the following in accordance with Section 01 33 00 SUBMITTAL PROCEDURES:

SD-02 Shop Drawings

Roofing Panels; G
Flashing and Accessories; G
Gutter/Downspout Assembly; G

SD-03 Product Data

Submit manufacturer's catalog data for the following items:

Roof Panels; G
Factory-Applied Color Finish; G
Accessories; G
Fasteners; G
Pressure Sensitive Tape; G
Coil Stock; G

SD-04 Samples

Roof Panels; G
Factory-applied Color Finish, Samples, 9 inch lengths, full width; G
Accessories
Fasteners
Gaskets and Sealant/Insulating Compounds

SD-05 Design Data

Wind Uplift Resistance; G

SD-06 Test Reports

Leakage Test Report; G
Wind Uplift Test Report; G
Factory Finish and Color Performance Requirements; G

SD-07 Certificates

Roof Panels; G
Coil Stock Compatibility; G
Qualification of Manufacturer; G
Qualification of Applicator; G

SD-11 Closeout Submittals

Warranties; G

1.4 QUALITY ASSURANCE

1.4.1 Qualification of Manufacturer

Submit documentation verifying metal roof panel manufacturer has been in the business of manufacturing metal roof panels for a period of not less than 5 years.

Manufacturer must also provide engineering services by an authorized engineer, currently licensed in the geographic area of the project, with a minimum of five (5) years experience as an engineer knowledgeable in roof wind design analysis, protocols and procedures for MBMA RSDM, ASCE 7, UL 580, and FM 4471. Engineer must provide certified engineering calculations for the project conforming to the stated references.

1.4.1.1 Manufacturer's Technical Representative

The manufacturer's technical representative must be thoroughly familiar with the products to be installed, installation requirements and practices, and with any special considerations in the geographical area of the project. The representative must perform field inspections and attend meetings as specified.

1.4.1.2 Single Source

Roofing panels, clips, closures, and other accessories must be standard products of the same manufacturer, and the most recent design of the manufacturer to operate as a complete system for the intended use.

1.4.2 Qualification of Applicator

Metal roof system applicator must be approved, authorized, or licensed in writing by the roof panel manufacturer and have a minimum of five years experience as an approved, authorized, or licensed applicator with that manufacturer, approved at a level capable of providing the specified warranty. Supply the names, locations and client contact information of 5 projects of similar size and scope constructed by applicator using the manufacturer's roofing products submitted for this project within the previous three years.

1.4.3 Field Verification

Prior to the preparation of drawings and fabrication, verify location of roof framing, roof openings and penetrations, and any other special conditions. Indicate all special conditions and measurements on final shop drawings.

1.4.4 Qualifications for Welding Work

Welding procedures must conform to AWS D1.1/D1.1Mfor steel or AWS D1.2/D1.2M for aluminum.

Operators are permitted to make only those types of weldments for which each is specifically qualified.

1.4.5 Pre-roofing Conference

After approval of submittals and before performing roofing system installation work, hold a pre-roofing conference to review the following:

a. Drawings, specifications, and submittals related to the roof work. Submit, as a minimum; sample profiles of roofing panels, with factory-applied color finish samples, flashing and accessories, gutter/downspout assembly samples, typical fasteners and pressure sensitive tape, sample gaskets and sealant/insulating compounds. Also include data and 1/2 pint sample of repair paint, and technical data on coil stock and coil stock compatibility.

b. Roof system components installation;

c. Procedure for the roof manufacturer's technical representative's onsite inspection and acceptance of the roofing substrate, the name of the manufacturer's technical representatives, the frequency of the onsite visits, distribution of copies of the inspection reports from the manufacturer's technical representative;

d. Contractor's plan for coordination of the work of the various trades involved in providing the roofing system and other components secured to the roofing; and

e. Quality control plan for the roof system installation;

f. Safety requirements.

Coordinate pre-roofing conference scheduling with the Contracting Officer. Attendance is mandatory for the Contractor, the Contracting Officer's designated personnel, personnel directly responsible for the installation of metal roof system, flashing and sheet metal work, , other trades interfacing with the roof work, and representative of the metal roofing manufacturer. Before beginning roofing work, provide a copy of meeting notes and action items to all attending parties. Note action items requiring resolution prior to start of roof work.

1.5 DELIVERY, HANDLING, AND STORAGE

Deliver, store, and handle panel materials, bulk roofing products, accessories, and other manufactured items in a manner to prevent damage and deformation, as recommended by the manufacturer, and as specified.

1.5.1 Delivery

Package and deliver materials to the site in undamaged condition. Provide adequate packaging to protect materials during shipment. Do not uncrate materials until ready for use, except for inspection. Immediately upon arrival of materials at jobsite, inspect materials for damage, deformation, dampness, and staining. Remove affected materials from the site and immediately replace. Remove moisture from wet materials not otherwise affected, restack and protect from further moisture exposure.

1.5.2 Handling

Handle materials in a manner to avoid damage. Select and operate material handling equipment so as not to damage materials or applied roofing.

1.5.3 Storage

Stack materials stored on site on platforms or pallets, and cover with tarpaulins or other weathertight covering which prevents trapping of water or condensation under the covering. Store roof panels so that water which may have accumulated during transit or storage will drain off. Do not store panels in contact with materials that might cause staining. Secure coverings and stored items to protect from wind displacement.

1.6 PROJECT CONDITIONS

Weather Limitations: Proceed with installation only when existing and forecast weather conditions permit metal roof panel work to be performed according to manufacturer's written instructions and warranty requirements, and specified safety requirements.

1.7 FABRICATION

Fabricate and finish metal roof panels and accessories on a rolling mill to the greatest extent possible, per manufacturer's standard procedures and processes, and as necessary to fulfill indicated performance requirements. Comply with indicated profiles, dimensional and structural requirements.

Provide panel profile, as indicated on drawings for full length of panel. Fabricate panel side laps with factory installed separator strips providing a weather tight seal and preventing metal-to metal contact, and minimizing noise from movements within the panel assembly.

1.7.1 Finishes

Finish quality and application processes must conform to the related standards specified within this section. Noticeable variations within the same piece are not acceptable. Variations in appearance of adjoining components are acceptable if they are within the range of approved samples and are assembled or installed to minimize any contrasting variations.

1.7.2 Accessories

Fabricate flashing and trim to comply with recommendations in SMACNA 1793 as applicable to the design, dimensions, metal, and other characteristics of the item indicated.

a. Form exposed sheet metal accessories which are free from excessive oil canning, buckling, and tool marks, and are true to line and levels indicated, with exposed edges folded back to form hems.

b. End Seams: Fabricate nonmoving seams with flat-lock seams. Form seams and seal with epoxy seam sealer. Rivet joints for additional strength.

c. Sealed Joints: Form non-expansion, but movable joints in metal to accommodate elastomeric sealant to comply with SMACNA 1793.

d. Conceal fasteners and expansion provisions where possible. Exposed fasteners are not allowed on faces of accessories exposed to view.

e. Fabricate cleats and attachments devices of size and metal thickness recommended by SMACNA or by metal roof panel manufacturer for

application, but not less than the thickness of the metal being secured.

1.8 WARRANTIES

Provide metal roof system material and workmanship warranties meeting specified requirements. Provide revision or amendment to manufacturer's standard warranty as required to comply with the specified requirements.

1.8.1 Metal Roof Panel Manufacturer Warranty

Furnish the metal roof panel manufacturer's 20-year no dollar limit roof system materials and installation workmanship warranty, including flashing, components, trim, and accessories necessary for a watertight roof system construction. Make warranty directly to the Government, commencing at time of Government's acceptance of the roof work. The warranty must state that:

a. If within the warranty period, the metal roof system, as installed for its intended use in the normal climatic and environmental conditions of the facility, becomes non-watertight, shows evidence of moisture intrusion within the assembly, displaces, corrodes, perforates, separates at the seams, or shows evidence of excessive weathering due to defective materials or installation workmanship, the repair or replacement of the defective and damaged materials of the metal roof system and correction of defective workmanship is the responsibility of the metal roof panel manufacturer. All costs associated with the repair or replacement work are the responsibility of the metal roof panel manufacturer.

b. If the manufacturer or his approved applicator fail to perform the repairs within 48 hours of notification, emergency temporary repairs performed by others does not void the warranty.

1.8.2 Manufacturer's Finish Warranty

Provide a manufacturer's no-dollar-limit 20 year warranty for the roofing system. Issue the warranty directly to the Government at the date of Government acceptance.warranting that the factory color finish, under normal atmospheric conditions at the site, will not crack, peel, or delaminate; chalk in excess of a numerical rating of 8 when measured in accordance with ASTM D4214; or fade or change colors in excess of 5 NBS units as measured in accordance with ASTM D2244.

1.8.3 Metal Roof System Installer Warranty

Provide roof system installer warranty for a period of not less than five years that the roof system, as installed, is free from defects in installation workmanship, to include the roof panel installation, flashing, accessories, attachments, and sheet metal installation integral to a complete watertight roof system assembly. Issue warranty directly to the Government. Correction of defective workmanship and replacement of damaged or affected materials is the responsibility of the metal roof system installer. All costs associated with the repair or replacement work are the responsibility of the installer.

1.8.4 Continuance of Warranty

Repair or replacement work that becomes necessary within the warranty

period must be approved, as required, and accomplished in a manner so as to restore the integrity of the roof system assembly and validity of the metal roof system manufacturer warranty for the remainder of the manufacturer warranty period.

1.9 CONFORMANCE AND COMPATIBILITY

The entire metal roofing and flashing system must be in accordance with specified and indicated requirements, including wind resistance and seismic per AISC 341 requirements. Work not specifically addressed and any deviation from specified requirements must be in general accordance with recommendations of the MBMA RSDM, NRCA RoofMan, the metal panel manufacturer's published recommendations and details, and compatible with surrounding components and construction. Submit any deviation from specified or indicated requirements to the Contracting Officer for approval prior to installation.

PART 2 PRODUCTS

2.1 ROOF PANELS

Contractor shall verify roof panels and match with either aluminum or steel in profiles to match existing roof system.

2.1.1 Metal Sheet Panels

Roll-form aluminum roof panels to the specified profile, with thickness and depth to match existing.

Material must be plumb and true, and within the tolerances listed:

a. Aluminum sheet conforming to ASTM B209, and AA ADM

b. Roll-form steel sheet roof panels with gauge and depth to match existing. Material must be plumb and true.

c. Galvanized steel sheet conforming to ASTM A653/A653M and AISI SG03-3.

d. Individual panels to have continuous length sufficient to cover the entire length of any unbroken roof slope with no joints or seams and formed without warping, waviness, or ripples that are not a part of the panel profile and free from damage to the finish coating system.

e. Provide panels with thermal expansion and contraction consistent with the type of system specified, and the following:

(1) Profile shall be smooth, flat.
(2) Profile shall match existing as shown on drawings.

2.2 FACTORY FINISH AND COLOR PERFORMANCE REQUIREMENTS

All panels are to receive a factory applied polyvinylidene fluoride finish consisting of a baked topcoat with a manufacturer's recommended prime coat conforming to the following:

a. Metal Preparation: All metal is to have the surfaces carefully prepared for painting on a continuous process coil coating line by alkali cleaning, hot water rinsing, application of chemical conversion coating, cold water rinsing, sealing with an acid rinse, and thorough

drying.

b. Prime Coating: A base coat of epoxy paint, specifically formulated to interact with the top-coat, is to be applied to the prepared surfaces by roll coating to a dry film thickness of 0.20 plus 0.05 mils. The prime coat must be oven cured prior to application of the finish coat.

c. Exterior Finish Coating: Apply the exterior finish coating over the primer by roll coating to a dry film thickness of 0.80 plus 0.05 mils (3.80 plus 0.05 mils for Vinyl Plastisol) for a total dry film thickness of 1.00 plus 0.10 mils (4.00 plus 0.10 mils for Vinyl Plastisol). This exterior finish coat must be oven-cured.

d. Interior finish coating: Apply a wash coat on the reverse side over primer by roll coating to a dry film thickness of 0.30 plus 0.05 mils for a total dry fill thickness of 0.50 plus 0.10 mils. The wash coat must be oven cured.

e. Color: The exterior finish chosen from the manufacturer's standard color chart.

f. Physical Properties: Coating must conform to the industry and manufacturer's standard performance criteria as listed by the following certified test reports:

General:	ASTM D5894 and ASTM D4587
Abrasion:	ASTM D968
Adhesion:	ASTM D3359
Chalking:	ASTM D4214
Chemical Pollution:	ASTM D1308
Color Change and Conformity:	ASTM D2244
Creepage:	ASTM D1654
Cyclic Corrosion Test:	ASTM D5894
Flame Spread:	ASTM E84
Flexibility:	ASTM D522/D522M
Formability:	ASTM D522/D522M
Gloss at 60 and 85 degrees:	ASTM D523
Humidity:	ASTM D2247 and ASTM D714
Oxidation:	ASTM D610

Pencil Hardness:	ASTM D3363
Reverse Impact:	ASTM D2794
Salt Spray:	ASTM B117
Weatherometer:	ASTM G152, ASTM G153 and ASTM D822

2.2.1 Specular Gloss

Finished roof surfaces to have a specular gloss value of 30 plus or minus 5 at an angle of 60 degrees when measured in accordance with ASTM D523.

2.3 MISCELLANEOUS METAL FRAMING

2.3.1 General

Provide cold formed metallic-coated steel sheet conforming to ASTM A653/A653M, and AISI S100.

2.3.2 Fasteners and Miscellaneous Metal Framing

Provide compatible type, corrosion resistant, of sufficient size and length to penetrate the supporting element a minimum of one inch with other required properties to fasten miscellaneous metal framing members to substrates in accordance with the roof panel manufacturer's and ASCE 7 requirements.

2.3.2.1 Exposed Fasteners

Fasteners for roof panels must be corrosion resistant to match existing, compatible with the sheet panel or flashing material and of the type and size recommended by the manufacturer to meet the performance requirements and design loads. Fasteners for accessories must be the manufacturer's standard. Provide an integral metal washer, matching the color of attached material with compressible sealing EPDM gasket approximately 3/32 inch thick for exposed fasteners.

2.3.2.2 Screws

Provide corrosion resistant screws, shall match existing of the type and size recommended by the manufacturer to meet the performance requirements.

2.3.2.3 Rivets

Provide closed-end type rivets, corrosion resistant shall match existing where watertight connections are required.

2.3.2.4 Attachment Clips

Provide stainless steel, series 300 clips. Size, shape, thickness and capacity must meet the thickness and design load criteria specified.

2.3.3 Electrodes for Manual, Shielded Metal Arc Welding

Electrodes for manual, shielded metal arc welding must meet the requirements of AWS D1.1/D1.1M, and be covered, mild-steel electrodes

conforming to AWS A5.1/A5.1M.

2.4 ACCESSORIES

Accessories must be compatible with the metal roof panels. Sheet metal flashing, trim, metal closure strips, caps, and similar metal accessories must be not less than the minimum thicknesses specified for roof panels. Provide exposed metal accessories to match the panels furnished, except as otherwise indicated. Molded foam rib, ridge and other closure strips must be closed-cell or solid-cell synthetic rubber or neoprene premolded to match configuration of the panels and not absorb or retain water.

2.4.1 Pre-manufactured Accessories

Pre-manufactured accessories must be manufacturer's standard for intended purpose, comply with applicable specification section, compatible with the metal roof system and approved for use by the metal roof panel manufacturer. Construct curbs to match roof slope.

2.4.2 Metal Closure Strips

Provide factory fabricated steel closure strips of the same gauge, color, finish and profile as the specified roof panel.

2.4.3 Rubber Closure Strips

Provide closed-cell, expanded cellular rubber closure strips conforming to ASTM D1056 and ASTM D1667, extruded or molded to the configuration of the specified roof panel profile and in lengths supplied by roof panel manufacturer.

2.4.4 Subgirts for Retrofits

Provide bar subgirts 1-1/2 by 1/8 inch galvanized steel with slotted holes for welding to end of impaling clip spikes.

2.5 JOINT SEALANTS

2.5.1 Sealants

Sealants are to be an approved gun type for use in hand or air pressure caulking guns at temperatures above 40 degrees F (or frost-free application at temperatures above 10 degrees F) with a minimum solid content of 85 percent of the total volume. Sealant must dry with a tough, durable surface skin which permits it to remain soft and pliable underneath, providing a weather tight joint. No migratory staining, in conformance with to ASTM C792, is permitted on painted or unpainted metal, stone, glass, vinyl or wood.

Prime all joints to receive sealants with a compatible one-component or two-component primer as recommended by the roof panel manufacturer.

2.5.1.1 Shop Applied Sealants

Sealant for shop-applied caulking must be an approved gun grade, non-sag one-component polysulfide or silicone conforming to ASTM C792 and ASTM C920, Type II, with a curing time which ensures the sealants plasticity at the time of field erection. Color to match panel color.

2.5.1.2 Field Applied Sealants

Sealants for field-applied caulking must be an approved gun grade, non-sag on-component polysulfide or two component polyurethane with an initial maximum Shore A durometer hardness of 25, conforming to ASTM C920, Type II. Color to match panel color.

2.5.1.3 Tape Sealants

Provide pressure sensitive, 100 percent solid tape sealant with a release paper backing; permanently elastic, non-sagging, non-toxic and non-staining as approved by the roof panel manufacturer.

2.5.2 Sheet Metal Flashing and Trim

2.5.2.1 Fabrication, General

Custom fabricate sheet metal flashing and trim to comply with recommendations within the SMACNA 1793 that apply to design, dimensions, metal type, and other characteristics of design indicated and shall match existing. Shop fabricate items to the greatest extent possible. Obtain and verify field measurements for accurate fit prior to shop fabrication. Fabricate flashing and trim without excessive oil canning, buckling, and tool marks, true to line and levels indicated, with exposed edges folded back to form hems.

2.5.2.2 Roof Drainage Sheet Metal Fabrications

Gutters: Fabricate to cross section indicated, with riveted and soldered joints, complete with end pieces, outlet tubes, and other special accessories as required. Fabricate in minimum 96 inch long sections. Fabricate expansion joints and accessories from the same metal as gutters, unless otherwise indicated.

Downspouts: Fabricate rectangular downspouts complete with mitered elbows. Furnish with metal hangars of same material as downspouts and anchors.

PART 3 EXECUTION

3.1 EXAMINATION

Examine substrates, areas, and conditions, with installer present, for compliance with requirements for installation tolerances, metal roof panel supports, and other conditions affecting performance of the work. Ensure surfaces are suitable, dry and free of defects and projections which might affect the installation.

Examine primary and secondary roof framing to verify that rafters, purlins, angels, channels, and other structural support members for panels and anchorages have been installed within alignment tolerances required by metal roof panel manufacturer, UL, ASTM, and ASCE 7 and applicable seismic requirements.

Examine solid roof sheathing to verify that sheathing joints are supported by framing or blocking; and that installation is within flatness tolerances required by metal roof panel manufacturer.

Examine rough-in for components and systems penetrating metal roof panels

to verify actual locations of penetrations relative to seam locations of panels prior to installation.

Submit a written report to the Contracting Officer, endorsed by the installer, listing conditions detrimental to the performance of the work. Proceed with installation only after defects have been corrected.

3.2 INSTALLATION

Installation must meet specified requirements and be in accordance with the manufacturer's installation instructions and approved shop drawings. Do not install damaged materials. Dissimilar materials which are not compatible when contacting each other must be insulated by means of gaskets or sealing/insulating compounds. Keep all exposed surfaces and edges clean and free from sealant, metal cuttings, hazardous burrs, and other foreign material. Remove stained, discolored, or damaged materials from the site.

3.2.1 Preparation

Clean all substrate substances which may be harmful to roof panels including removing projections capable of interfering with with roof panel attachment.

Install sub-purlins, eave angles, furring, and other miscellaneous roof panel support members and anchorage according to metal roof panel manufacturer's written instructions.

3.3 PROTECTION OF APPLIED MATERIALS

Do not permit storing, walking, wheeling, and trucking directly on applied roofing/insulation materials. Provide temporary walkways, runways, and platforms of smooth clean boards or planks as necessary to avoid damage to applied roofing/insulation materials, and to distribute weight to conform to indicated live load limits of roof construction.

3.4 FASTENER INSTALLATION

Anchor metal roof panels and other components of the Work securely in place, using approved fasteners according to manufacturer's written instructions.

3.4.1 Welding

Procedures for manual, shielded metal-arc welding, the appearance and quality of welds made, and the methods used in correcting welding work must be in accordance with AWS D1.1/D1.1M.

3.5 FLASHING, TRIM, AND CLOSURE INSTALLATION

3.5.1 General Requirements

Comply with performance requirements, manufacturer's written installation instructions, and SMACNA 1793. Provide concealed fasteners where possible. Set units true to line and level as indicated. Install work with laps, joints, and seams that will be permanently water tight and weather resistant. Work is to be accomplished to form weather tight construction without waves, warps, buckles, fastening stresses or distortion, and to allow for expansion and contraction. Cutting, fitting,

drilling, and other operations in connection with sheet metal required to accomplish the work must conform to the manufacturers written instructions.

3.5.2 Metal Flashing

Install exposed metal flashing at building corners, rakes, eaves, junctions between metal siding and roofing, valleys and changes off slope or direction in metal roofing, building expansion joints and gutters.

Exposed metal flashing must be the same material, color, and finish as the specified metal roofing panels. Furnish flashing in minimum 8 foot lengths. Exposed flashing must have 1 inch locked and blind soldered end joints, with expansion joints at intervals of no greater than 16 feet.

Fasten flashing at not more than 8 inches on center for roofs, except where flashing is held in place by the same screws used to secure panels. Exposed flashing and flashing subject to rain penetration must be bedded in specified joint sealant. Flashing which is contact with dissimilar metals must be isolated by means of the specified asphalt mastic material to prevent electrolytic deterioration.

Form drips to the profile indicated, with the edge folded back 1/2 inch to form a reinforced drip edge.

3.6 ROOF PANEL INSTALLATION

Provide metal roof panels of full length from eave to ridge or eave to wall as indicated, unless otherwise indicated or restricted by shipping limitations. Anchor metal roof panels or other components of the Work securely in place, with provisions for thermal and structural movement in accordance with NRCA 0420.

Steel Roof Panels: Use stainless steel fasteners for exterior surfaces and galvanized fasteners for unexposed surfaces.

Anchor Clips: Anchor metal roof panels and other components of the Work securely in place, using approved fasteners according to manufacturer's written instructions. Provide all blocking and nailers as required.

Metal Protection: Where dissimilar metals contact each other or possibly corrosive substrates, protect against galvanic action by permanent separation as recommended by the metal roof panel manufacturer.

Joint Sealers: Install gaskets, joint fillers, and sealants where indicated and required for weatherproof performance of metal roof panel system. Provide types of gaskets, fillers, and sealants indicated or, if not indicated, types recommended by metal roof panel manufacturer.

3.6.1 Handling and Erection

Erect roofing system in accordance with the approved erection drawings, printed instructions and safety precautions of the manufacturer.

Do not subject panels to overloading, abuse, or undue impact. Do not apply bent, chipped, or defective panels. Damaged panels must be replaced and removed from the site at the contractors expense. Erect panels true,

plumb, and in exact alignment with the horizontal and vertical edges of the building, securely anchored, and with indicated rake, eave, and curb overhang. Allow for thermal movement of the roofing, movement of the building structure, and provide permanent freedom from noise due to wind pressure.

Do not permit storage, walking, wheeling or trucking directly on applied roofing materials. Provide temporary walkways, runways, and platforms of smooth clean boards or planks as necessary to avoid damage to the installed roofing materials, and to distribute weight to conform to the indicated live load limits of the roof construction.

Roof panels must be laid with corrugations in the direction of the roof slope. End laps of exterior roofing must not be less than 8 inches; side laps of standard exterior corrugated panels must not be less than 2-1/2 corrugations.

Field cutting of metal roof panels by torch is not permitted. Field cut only as recommended by manufacturer's written instructions.

3.6.2 Closure Strips

Install metal closure strips at open ends of metal ridge rolls; open ends of corrugated or ribbed pattern roofs, and at intersection of wall and roof, unless open ends are concealed with formed eave flashing; rake of metal roof unless open end has a formed flashing member; and in other required areas.

Install closure strips at intersection of the wall with metal roofing; top and bottom of metal siding; heads of wall openings; and in other required locations.

3.6.3 Workmanship

Make lines, arises, and angles sharp and true. Free exposed surfaces from any visible wave, warp, buckle and tool marks. Fold back exposed edges neatly to form a 1/2 inch hem on the concealed side. Make sheet metal exposed to the weather watertight with provisions for expansion and contraction.

Make surfaces to receive sheet metal plumb and true, clean, even, smooth, dry, and free of defects and projections which might affect the application. For installation of items not shown in detail or not covered by specifications conform to the applicable requirements of SMACNA 1793. Provide sheet metal flashing in the angles formed where roof decks abut walls, curbs, ventilators, pipes, or other vertical surfaces and wherever indicated and as necessary to make the work watertight.

3.7 ACCEPTANCE PROVISIONS

3.7.1 Erection Tolerances

Erect metal roofing straight and true with plumb vertical lines correctly lapped and secured in accordance with the manufacturer's written instructions. Horizontal lines must not vary more than 1/8 inch in 40 feet.

3.7.2 Leakage Tests

Finished application of metal roofing is to be subject to inspection and

test for leakage by the Contracting Officer or his designated representative, and Architect/Engineer. Inspection and tests will be conducted without cost to the Government.

Inspection and testing is to be made promptly after erection to permit correction of defects and removal/replacement of defective materials.

3.7.3 Repairs to Finish

Scratches, abrasions, and minor surface defects of finish may be repaired with the specified repair materials and as recommended by the metal roof panel manufacturer. Finished repaired surfaces must be uniform and free from variations of color and surface texture. Repaired metal surfaces that are not acceptable to the project requirements are to be immediately removed and replaced with new material.

3.7.4 Paint Finished Metal Roofing

Paint finished metal roofing will be tested for color stability by the Contracting Officer during the manufacturer's specified guarantee period. Panels that indicate color changes, fading, or surface degradation, determined by visual examination, must be removed and replaced with new panels at no expense to the Government. New panels will be subject to the specified tests for an additional year from the date of their installation.

3.8 CLEAN UP AND DISPOSAL

Clean exposed sheet metal work at completion of installation. Remove metal shavings, filings, nails, bolts, and wires from roofs. Remove grease and oil films, excess sealants, handling marks, contamination from steel wool, fittings and drilling debris and scrub the work clean. Exposed metal surfaces must be free of dents, creases, waves, scratch marks, solder or weld marks, and damage to the finish coating. Touch up scratches in panel finish with manufacturer supplied touch-up paint system to match panel finish. Treat exposed cut edges with manufacturer supplied clear coat.

Collect all scrap/waste materials and place in containers. Promptly dispose of demolished and scrap materials. Do not allow scrap/waste materials to accumulate on-site; transport immediately from the government property and legally dispose of them.

-- End of Section --

SECTION 07 84 00

FIRESTOPPING
05/10

PART 1 GENERAL

1.1 SUMMARY

Furnish and install tested and listed firestopping systems, combination of materials, or devices to form an effective barrier against the spread of flame, smoke and gases, and maintain the integrity of fire resistance rated walls, partitions, floors, and ceiling-floor assemblies, including through-penetrations and construction joints and gaps.

a. Through-penetrations include the annular space around pipes, tubes, conduit, wires, cables and vents.

b. Construction joints include those used to accommodate expansion, contraction, wind, or seismic movement; firestopping material shall not interfere with the required movement of the joint.

Gaps requiring firestopping include gaps between the curtain wall and the floor slab and between the top of the fire-rated walls and the roof or floor deck above and at the intersection of shaft assemblies and adjoining fire resistance rated assemblies.

1.2 REFERENCES

The publications listed below form a part of this specification to the extent referenced. The publications are referred to within the text by the basic designation only.

ASTM INTERNATIONAL (ASTM)

ASTM E119	(2014) Standard Test Methods for Fire Tests of Building Construction and Materials
ASTM E1399/E1399M	(1997; E 2013;R 2013) Cyclic Movement and Measuring the Minimum and Maximum Joint Widths of Architectural Joint Systems
ASTM E1966	(2015) Fire-Resistive Joint Systems
ASTM E2174	(2014b) Standard Practice for On-Site Inspection of Installed Fire Stops
ASTM E2307	(2015a) Standard Test Method for Determining Fire Resistance of Perimeter Fire Barrier Systems Using Intermediate-Scale, Multi-story Test Apparatus
ASTM E2393	(2010a) Standard Practice for On-Site Inspection of Installed Fire Resistive Joint Systems and Perimeter Fire Barriers

ASTM E699	(2009) Standard Practice for Evaluation of Agencies Involved in Testing, Quality Assurance, and Evaluating of Building Components
ASTM E814	(2013a) Standard Test Method for Fire Tests of Through-Penetration Fire Stops
ASTM E84	(2015b) Standard Test Method for Surface Burning Characteristics of Building Materials

FM GLOBAL (FM)

FM 4991	(2013) Approval of Firestop Contractors
FM APP GUIDE	(updated on-line) Approval Guide http://www.approvalguide.com/

INTERNATIONAL CODE COUNCIL (ICC)

ICC IBC	(2012) International Building Code

UNDERWRITERS LABORATORIES (UL)

UL 1479	(2015) Fire Tests of Through-Penetration Firestops
UL 2079	(2004; Reprint Dec 2014) Tests for Fire Resistance of Building Joint Systems
UL 723	(2008; Reprint Aug 2013) Test for Surface Burning Characteristics of Building Materials
UL Fire Resistance	(2014) Fire Resistance Directory

1.3 SEQUENCING

Coordinate the specified work with other trades. Apply firestopping materials, at penetrations of pipes and ducts, prior to insulating, unless insulation meets requirements specified for firestopping. Apply firestopping materials. at building joints and construction gaps, prior to completion of enclosing walls or assemblies. Cast-in-place firestop devices shall be located and installed in place before concrete placement. Pipe, conduit or cable bundles shall be installed through cast-in-place device after concrete placement but before area is concealed or made inaccessible. Firestop material shall be inspected and approved prior to final completion and enclosing of any assemblies that may conceal installed firestop.

1.4 SUBMITTALS

Government approval is required for submittals with a "G" designation; submittals not having a "G" designation are for Contractor Quality Control approval. Submit the following in accordance with Section 01 33 00 SUBMITTAL PROCEDURES:

SD-02 Shop Drawings

Firestopping System; G

SD-03 Product Data

Firestopping Materials; G

SD-06 Test Reports

Inspection; G

SD-07 Certificates

Inspector Qualifications
Firestopping Materials
Installer Qualifications; G

1.5 QUALITY ASSURANCE

1.5.1 Installer

Engage an experienced Installer who is:

a. FM Research approved in accordance with FM 4991, operating as a UL Certified Firestop Contractor, or

b. Certified, licensed, or otherwise qualified by the firestopping manufacturer as having the necessary staff, training, and a minimum of 3 years experience in the installation of manufacturer's products in accordance with specified requirements. Submit documentation of this experience. A manufacturer's willingness to sell its firestopping products to the Contractor or to an installer engaged by the Contractor does not in itself confer installer qualifications on the buyer. The Installer shall have been trained by a direct representative of the manufacturer (not distributor or agent) in the proper selection and installation procedures. The installer shall obtain from the manufacturer and submit written certification of training, and retain proof of certification for duration of firestop installation.

1.5.2 Inspector Qualifications

The inspector shall meet the criteria contained in ASTM E699 for agencies involved in quality assurance and shall have a minimum of two years experience in construction field inspections of firestopping systems, products, and assemblies. The inspector shall be completely independent of, and divested from, the installer, the manufacturer, and the supplier of any material or item being inspected. The inspector shall not be a competitor of the installer, the contractor, the manufacturer, or supplier of any material or item being inspected. Include in the qualifications submittal a notarized statement assuring compliance with the requirements stated herein.

1.6 DELIVERY, STORAGE, AND HANDLING

Deliver materials in the original unopened packages or containers showing name of the manufacturer and the brand name. Store materials off the ground, protected from damage and exposure to elements and temperatures in

accordance with manufacturer requirements. Remove damaged or deteriorated materials from the site. Use materials within their indicated shelf life.

PART 2 PRODUCTS

2.1 FIRESTOPPING SYSTEM

Submit detail drawings including manufacturer's descriptive data, typical details conforming to UL Fire Resistance or other details certified by another nationally recognized testing laboratory, installation instructions or UL listing details for a firestopping assembly in lieu of fire-test data or report. For those firestop applications for which no UL tested system is available through a manufacturer, a manufacturer's engineering judgment, derived from similar UL system designs or other tests, shall be submitted for review and approval prior to installation. Submittal must indicate the firestopping material to be provided for each type of application. When more than a total of 5 penetrations and/or construction joints are to receive firestopping, provide drawings that indicate location, "F" "T" and "L" ratings, and type of application.

Also, submit a written report indicating locations of and types of penetrations and types of firstopping used at each location; record type by UL list printed numbers.

2.2 FIRESTOPPING MATERIALS

Provide firestopping materials, supplied from a single domestic manufacturer, consisting of commercially manufactured, asbestos-free, nontoxic products FM APP GUIDE approved, or UL listed, for use with applicable construction and penetrating items, complying with the following minimum requirements:

2.2.1 Fire Hazard Classification

Material shall have a flame spread of 25 or less, and a smoke developed rating of 50 or less, when tested in accordance with ASTM E84 or UL 723. Material shall be an approved firestopping material as listed in UL Fire Resistance or by a nationally recognized testing laboratory.

2.2.2 Toxicity

Material shall be nontoxic and carcinogen free to humans at all stages of application or during fire conditions and shall not contain hazardous chemicals or require harmful chemicals to clean material or equipment.

2.2.3 Fire Resistance Rating

Firestop systems shall be UL Fire Resistance listed or FM APP GUIDE approved with "F" rating at least equal to fire-rating of fire wall or floor in which penetrated openings are to be protected. Where required, firestop systems shall also have "T" rating at least equal to the fire-rated floor in which the openings are to be protected.

2.2.3.1 Through-Penetrations

Firestopping materials for through-penetrations, as described in paragraph SYSTEM DESCRIPTION, shall provide "F", "T" and "L" fire resistance ratings in accordance with ASTM E814 or UL 1479. Fire resistance ratings shall be as follows:

2.2.3.1.1 Penetrations of Fire Resistance Rated Walls and Partitions

F Rating = Rating of wall or partition being penetrated.

2.2.3.1.2 Penetrations of Fire Resistance Rated Floors, Floor-Ceiling Assemblies and the Ceiling Membrane of Roof-Ceiling Assemblies

F Rating = Rating of assembly being penetrated. Where the penetrating item is outside of a wall cavity the F rating must be equal to the fire resistance rating of the floor penetrated, and the T rating shall be in accordance with the requirements of ICC IBC.

2.2.3.1.3 Penetrations of Fire and Smoke Resistance Rated Walls, Floors, Floor-Ceiling Assemblies, and the ceiling membrane of Roof-Ceiling Assemblies

F Rating = Rating of assembly being penetrated.

2.2.3.2 Construction Joints and Gaps

Fire resistance ratings of construction joints, as described in paragraph SYSTEM DESCRIPTION, and gaps such as those between floor slabs and curtain walls shall be the same as the construction in which they occur. Construction joints and gaps shall be provided with firestopping materials and systems that have been tested in accordance with ASTM E119, ASTM E1966 or UL 2079 to meet the required fire resistance rating. Curtain wall joints shall be provided with firestopping materials and systems that have been tested in accordance with ASTM E2307 to meet the required fire resistance rating. Systems installed at construction joints shall meet the cycling requirements of ASTM E1399/E1399M or UL 2079. All joints at the intersection of the top of a fire resistance rated wall and the underside of a fire-rated floor, floor ceiling, or roof ceiling assembly shall provide a minimum class II movement capability.

2.2.4 Material Certification

Submit certificates attesting that firestopping material complies with the specified requirements. For all intumescent firestop materials used in through penetration systems, manufacturer shall provide certification of compliance with UL 1479.

PART 3 EXECUTION

3.1 PREPARATION

Areas to receive firestopping must be free of dirt, grease, oil, or loose materials which may affect the fitting or fire resistance of the firestopping system. For cast-in-place firestop devices, formwork or metal deck to receive device prior to concrete placement must be sound and capable of supporting device. Prepare surfaces as recommended by the manufacturer.

3.2 INSTALLATION

Completely fill void spaces with firestopping material regardless of geometric configuration, subject to tolerance established by the manufacturer. Firestopping systems for filling floor voids 4 inches or more in any direction must be capable of supporting the same load as the floor is designed to support or be protected by a permanent barrier to

prevent loading or traffic in the firestopped area. Install firestopping in accordance with manufacturer's written instructions. Provide tested and listed firestop systems in the following locations, except in floor slabs on grade:

a. Penetrations of duct, conduit, tubing, cable and pipe through floors and through fire-resistance rated walls, partitions, and ceiling-floor assemblies.

b. Penetrations of vertical shafts such as pipe chases, elevator shafts, and utility chutes.

c. Gaps at the intersection of floor slabs and curtain walls, including inside of hollow curtain walls at the floor slab.

d. Gaps at perimeter of fire-resistance rated walls and partitions, such as between the top of the walls and the bottom of roof decks.

e. Construction joints in floors and fire rated walls and partitions.

f. Other locations where required to maintain fire resistance rating of the construction.

3.2.1 Insulated Pipes and Ducts

Thermal insulation shall be cut and removed where pipes or ducts pass through firestopping, unless insulation meets requirements specified for firestopping. Replace thermal insulation with a material having equal thermal insulating and firestopping characteristics.

3.2.2 Fire Dampers

Firestop installed with fire damper must be tested and approved for use in fire damper system. Firestop installed with fire damper must be tested and approved for use in fire damper system.

3.2.3 Data and Communication Cabling

Cabling for data and communication applications shall be sealed with re-enterable firestopping products and devices as indicated.

3.2.3.1 Re-Enterable Devices

Firestopping devices shall be pre-manufactured modular devices, containing built-in self-sealing intumescent inserts. Firestopping devices shall allow for cable moves, additions or changes without the need to remove or replace any firestop materials. Devices must be capable of maintaining the fire resistance rating of the penetrated membrane at 0 percent to 100 percent visual fill of penetrants; while maintaining "L" rating of <10 cfm/sf measured at ambient temperature and 400 degrees F at 0 percent to 100 percent visual fill.

3.2.3.2 Re-Sealable Products

Provide firestopping pre-manufactured modular products, containing self-sealing intumescent inserts. Firestopping products shall allow for cable moves, additions or changes. Devices shall be capable of maintaining the fire resistance rating of the penetrated membrane at 0 percent to 100 percent visual fill of penetrants.

3.3 INSPECTION

For Navy projects, install one of each type of penetration and have it inspected and accepted by the Naval Facilities Engineering Command, Fire Protection Engineer prior to the installation of the remainder of the penetrations. At this inspection, the manufacturer's technical representative of the firestopping material shall be present. Submit written reports indicating locations of and types of penetrations and types of firestopping used at each location; type shall be recorded by UL listed printed numbers.

3.3.1 Inspection Standards

Inspect all firestopping in accordance to ASTM E2393 and ASTM E2174 for firestop inspection, and document inspection results to be submitted.

3.3.2 Inspection Reports

Submit inspection report stating that firestopping work has been inspected and found to be applied according to the manufacturer's recommendations and the specified requirements.

-- End of Section --

THIS PAGE HAS BEEN INTENTIONALLY LEFT BLANK

SECTION 07 92 00

JOINT SEALANTS
02/16

PART 1 GENERAL

1.1 REFERENCES

The publications listed below form a part of this specification to the extent referenced. The publications are referred to within the text by the basic designation only.

ASTM INTERNATIONAL (ASTM)

ASTM C1193	(2013) Standard Guide for Use of Joint Sealants
ASTM C1311	(2014) Standard Specification for Solvent Release Agents
ASTM C1521	(2013) Standard Practice for Evaluating Adhesion of Installed Weatherproofing Sealant Joints
ASTM C509	(2006; R 2015) Elastomeric Cellular Preformed Gasket and Sealing Material
ASTM C734	(2015) Low-Temperature Flexibility of Latex Sealants After Artificial Weathering
ASTM C919	(2012) Use of Sealants in Acoustical Applications
ASTM C920	(2014a) Standard Specification for Elastomeric Joint Sealants
ASTM D1056	(2014) Standard Specification for Flexible Cellular Materials - Sponge or Expanded Rubber
ASTM D217	(2010) Cone Penetration of Lubricating Grease
ASTM E84	(2015b) Standard Test Method for Surface Burning Characteristics of Building Materials

1.2 SUBMITTALS

Government approval is required for submittals with a "G" designation; submittals not having a "G" designation are for Contractor Quality Control approval. Submit the following in accordance with Section 01 33 00 SUBMITTAL PROCEDURES:

SD-03 Product Data

Sealants; G

Primers; G
Bond Breakers; G
Backstops; G

SD-06 Test Reports

Field Adhesion Test Report

SD-07 Certificates

Sealants; G

1.3 PRODUCT DATA

Include storage requirements, shelf life, curing time, instructions for mixing and application, and accessories. Provide manufacturer's Material Safety Data Sheet (MSDS) for each solvent, primer and sealant material proposed.

1.4 ENVIRONMENTAL CONDITIONS

Apply sealant when the ambient temperature is between 40 and 90 degrees F.

1.5 DELIVERY AND STORAGE

Deliver materials to the jobsite in unopened manufacturers' sealed shipping containers, with brand name, date of manufacture, color, and material designation clearly marked thereon. Label elastomeric sealant containers to identify type, class, grade, and use. Handle and store materials in accordance with manufacturer's printed instructions. Prevent exposure to foreign materials or subjection to sustained temperatures exceeding 90 degrees F or lower than 0 degrees F. Keep materials and containers closed and separated from absorptive materials such as wood and insulation.

1.6 QUALITY ASSURANCE

1.6.1 Compatibility with Substrate

Verify that each sealant is compatible for use with each joint substrate in accordance with sealant manufacturer's printed recommendations for each application.

1.6.2 Joint Tolerance

Provide joint tolerances in accordance with manufacturer's printed instructions.

1.6.3 Adhesion

Provide in accordance with ASTM C1193 or ASTM C1521.

PART 2 PRODUCTS

2.1 SEALANTS

Provide sealant products that have been tested, found suitable, and documented as such by the manufacturer for the particular substrates to

which they will be applied.

2.1.1 Interior Sealants

Provide ASTM C920, Type S or M, Grade NS, Class 12.5, Use NT. Location(s) and color(s) of sealant for the following. Note, color "as selected" refers to manufacturer's full range of color options

LOCATION	COLOR
a. Small voids between walls or partitions and adjacent lockers, casework, shelving, door frames, built-in or surface mounted equipment and fixtures, and similar items.	As selected
b. Perimeter of frames at doors, windows, and access panels which adjoin exposed interior concrete and masonry surfaces.	As selected
c. Joints of interior masonry walls and partitions which adjoin columns, pilasters, concrete walls, and exterior walls unless otherwise detailed.	As selected
d. Joints between edge members for acoustical tile and adjoining vertical surfaces.	As selected
e. Interior locations, not otherwise indicated or specified, where small voids exist between materials specified to be painted.	As selected
f. Joints between bathtubs and ceramic tile; joints between shower receptors and ceramic tile; joints formed where non-planar tile surfaces meet.	As selected
g. Joints formed between tile floors and tile base cove; joints between tile and dissimilar materials; joints occurring where substrates change.	As selected
h. Behind escutcheon plates at valve pipe penetrations and showerheads in showers.	As selected

2.1.2 Exterior Sealants

For joints in vertical surfaces, provide ASTM C920, Type S or M, Grade NS, Class 25, Use NT. For joints in horizontal surfaces, provide ASTM C920, Type S or M, Grade P, Class 25, Use T. Provide location(s) and color(s) of sealant as follows. Note, color "as selected" refers to manufacturer's full range of color options:

LOCATION	COLOR
a. Joints and recesses formed where frames and subsills of windows, doors, louvers, and vents adjoin masonry, concrete, or metal frames. Use sealant at both exterior and interior surfaces of exterior wall penetrations.	As selected
b. Joints between new and existing exterior masonry walls.	As selected
c. Masonry joints where shelf angles occur.	As selected
d. Joints in wash surfaces of stonework.	As selected
e. Expansion and control joints.	As selected
f. Interior face of expansion joints in exterior concrete or masonry walls where metal expansion joint covers are not required.	As selected
g. Voids where items pass through exterior walls.	As selected
h. Metal reglets, where flashing is inserted into masonry joints, and where flashing is penetrated by coping dowels.	As selected
i. Metal-to-metal joints where sealant is indicated or specified.	As selected
j. Joints between ends of gravel stops, fasciae, copings, and adjacent walls.	As selected

2.1.3 Floor Joint Sealants

ASTM C920, Type S or M, Grade P, Class 25, Use T. Provide location(s) and color(s) of sealant as follows. Note, color "as selected" refers to manufacturer's full range of color options:

LOCATION	COLOR
a. Seats of metal thresholds for exterior doors.	As selected
b. Control and expansion joints in floors, slabs, ceramic tile, and walkways.	As selected

2.1.4 Acoustical Sealants

Rubber or polymer based acoustical sealant in accordance with ASTM C919 to have a flame spread of 25 or less and a smoke developed rating of 50 or less when tested in accordance with ASTM E84. Provide non-staining acoustical sealant with a consistency of 250 to 310 when tested in accordance with ASTM D217. Acoustical sealant must remain flexible and adhesive after 500 hours of accelerated weathering as specified in ASTM C734.

2.1.5 Preformed Sealants

Provide preformed sealants of polybutylene or isoprene-butylene based pressure sensitive weather resistant tape or bead sealants capable of sealing out moisture, air and dust when installed as recommended by the manufacturer. At temperatures from minus30 to plus 160 degrees F, sealants must be non-bleeding and have no loss of adhesion.

2.1.5.1 Tape

Tape sealant: Provide cross section dimensions required by the manufacturer.

2.1.5.2 Bead

Bead sealant: Provide cross section dimensions required by the manufacturer.

2.1.5.3 Foam Strip

Provide foam strip of polyurethane foam. Provide foam strip capable of sealing out moisture, air, and dust when installed and compressed in accordance with manufacturer's printed instructions. Service temperature must beminus 40 to plus 275 degrees F. Furnish untreated strips with adhesive to hold them in place. Do not allow adhesive to stain or bleed onto adjacent finishes. Saturate treated strips with butylene waterproofing or impregnate with asphalt.

2.2 PRIMERS

Non-staining, quick drying type and consistency as recommended by the sealant manufacturer for the particular application.

2.3 BOND BREAKERS

Type and consistency as recommended by the sealant manufacturer to prevent adhesion of the sealant to the backing or to the bottom of the joint.

2.4 BACKSTOPS

Provide glass fiber roving, neoprene, butyl, polyurethane, or polyethylene foams free from oil or other staining elements as recommended by sealant manufacturer. Provide 25 to 33 percent oversized backing for closed cell and 40 to 50 percent oversized backing for open cell material, unless otherwise indicated. Provide backstop material that is compatible with sealant. Do not use oakum or other types of absorptive materials as backstops.

2.4.1 Rubber

Provide in accordance with ASTM D1056, Type 2, closed cell, Class A, Grade SCE 41, round cross section for cellular rubber sponge backing.

2.4.2 Synthetic Rubber

Provide in accordance with ASTM C509, Option I, Type I preformed rods or tubes for synthetic rubber backing.

2.4.3 Neoprene

Provide in accordance with ASTM D1056, closed cell expanded neoprene cord Type 2, Class C, Grade 2C2 for neoprene backing.

2.4.4 Butyl Rubber Based

Provide in accordance with ASTM C1311, from a single component, with solvent release; color as selected from manufacturer's full range of color choices.

2.4.5 Silicone Rubber Base

Provide in accordance with ASTM C920, from a single component, with solvent release, Non-sag, Class 25. Color as selected from manufacturer's full range of color choices.

2.5 CLEANING SOLVENTS

Provide type(s) recommended by the sealant manufacturer and in accordance with environmental requirements herein. Protect adjacent aluminum and bronze surfaces from solvents.

PART 3 EXECUTION

3.1 FIELD QUALITY CONTROL

Perform a field adhesion test in accordance with manufacturer's instructions and ASTM C1193, Method A or ASTM C1521, Method A, Tail Procedure. Remove sealants that fail adhesion testing; clean substrates, reapply sealants, and re-test. Test sealants adjacent to failed sealants. Submit field adhesion test report indicating tests, locations, dates, results, and remedial actions taken.

3.2 SURFACE PREPARATION

Prepare surfaces according to manufacturer's printed installation instructions. Clean surfaces from dirt, frost, moisture, grease, oil, wax, lacquer, paint, or other foreign matter that would destroy or impair adhesion. Remove oil and grease with solvent; thoroughly remove solvents prior to sealant installation. Wipe surfaces dry with clean cloths. When resealing an existing joint, remove existing caulk or sealant prior to applying new sealant. For surface types not listed below, provide in accordance with sealant manufacturer's printed instructions for each specific surface.

3.2.1 Steel Surfaces

Remove loose mill scale by sandblasting or, if sandblasting is impractical

or would damage finished work, scraping and wire brushing. Remove protective coatings by sandblasting or using a residue free solvent. Remove resulting debris and solvent residue prior to sealant installation.

3.2.2 Aluminum or Bronze Surfaces

Remove temporary protective coatings from surfaces that will be in contact with sealant. When masking tape is used as a protective coating, remove tape and any residual adhesive prior to sealant application. For removing protective coatings and final cleaning, use non-staining solvents recommended by the manufacturer of the item(s) containing aluminum or bronze surfaces.

3.2.3 Concrete and Masonry Surfaces

Where surfaces have been treated with curing compounds, oil, or other such materials, remove materials by sandblasting or wire brushing. Remove laitance, efflorescence and loose mortar from the joint cavity. Remove resulting debris prior to sealant installation.

3.2.4 Wood Surfaces

Ensure wood surfaces that will be in contact with sealants are free of splinters, sawdust and other loose particles.

3.3 SEALANT PREPARATION

Do not add liquids, solvents, or powders to sealants. Mix multicomponent elastomeric sealants in accordance with manufacturer's printed instructions.

3.4 APPLICATION

3.4.1 Joint Width-To-Depth Ratios

Acceptable Ratios:

JOINT WIDTH	JOINT DEPTH	
	Minimum	Maximum
For metal, glass, or other nonporous surfaces:		
1/4 inch (minimum)	1/4 inch	1/4 inch
over 1/4 inch	1/2 of width	Equal to width
For wood, concrete, masonry, or stone:		
1/4 inch (minimum)	1/4 inch	1/4 inch
over 1/4 inch to 1/2 inch	1/4 inch	Equal to width
over 1/2 inch to 1 inch	1/2 inch	5/8 inch

JOINT WIDTH	JOINT DEPTH	
	Minimum	Maximum
Over 1 inch	prohibited	

Unacceptable Ratios: Where joints of acceptable width-to-depth ratios have not been provided, clean out joints to acceptable depths and grind or cut to acceptable widths without damage to the adjoining work. Grinding is prohibited at metal surfaces.

3.4.2 Unacceptable Sealant Use

Do not install sealants in lieu of other required building enclosure weatherproofing components such as flashing, drainage components, and joint closure accessories, or to close gaps between walls, floors, roofs, windows, and doors, that exceed acceptable installation tolerances. Remove sealants that have been used in an unacceptable manner and correct building enclosure deficiencies to comply with contract documents requirements.

3.4.3 Masking Tape

Place masking tape on the finished surface on one or both sides of joint cavities to protect adjacent finished surfaces from primer or sealant smears. Remove masking tape within 10 minutes of joint filling and tooling.

3.4.4 Backstops

Provide backstops dry and free of tears or holes. Tightly pack the back or bottom of joint cavities with backstop material to provide joints in specified depths. Provide backstops where indicated and where backstops are not indicated but joint cavities exceed the acceptable maximum depths specified in "Joint Width-to-Depth Ratios" Table.

3.4.5 Primer

Clean out loose particles from joints immediately prior to application of. Apply primer to joints in concrete masonry units, wood, and other porous surfaces in accordance with sealant manufacturer's printed instructions. Do not apply primer to exposed finished surfaces.

3.4.6 Bond Breaker

Provide bond breakers to surfaces not intended to bond in accordance with, sealant manufacturer's printed instructions for each type of surface and sealant combination specified.

3.4.7 Sealants

Provide sealants compatible with the material(s) to which they are applied. Do not use a sealant that has exceeded its shelf life or has jelled and cannot be discharged in a continuous flow from the sealant gun. Apply sealants in accordance with the manufacturer's printed instructions with a gun having a nozzle that fits the joint width. Work sealant into joints so as to fill the joints solidly without air pockets. Tool sealant after application to ensure adhesion. Apply sealant

uniformly smooth and free of wrinkles. Upon completion of sealant application, roughen partially filled or unfilled joints, apply additional sealant, and tool smooth as specified. Apply sealer over sealants in accordance with the sealant manufacturer's printed instructions.

3.5 PROTECTION AND CLEANING

3.5.1 Protection

Protect areas adjacent to joints from sealant smears. Masking tape may be used for this purpose if removed 5 to 10 minutes after the joint is filled and no residual tape marks remain.

3.5.2 Final Cleaning

Upon completion of sealant application, remove remaining smears and stains and leave the work in a clean and neat condition.

a. Masonry and Other Porous Surfaces: Immediately remove fresh sealant that has been smeared on adjacent masonry, rub clean with a solvent, and remove solvent residue, in accordance with sealant manufacturer's printed instructions. Allow excess sealant to cure for 24 hour then remove by wire brushing or sanding. Remove resulting debris.

b. Metal and Other Non-Porous Surfaces: Remove excess sealant with a solvent moistened cloth. Remove solvent residue in accordance with solvent manufacturer's printed instructions.

-- End of Section --

THIS PAGE HAS BEEN INTENTIONALLY LEFT BLANK

SECTION 09 90 00

PAINTS AND COATINGS
05/11

PART 1 GENERAL

1.1 REFERENCES

The publications listed below form a part of this specification to the extent referenced. The publications are referred to within the text by the basic designation only.

AMERICAN CONFERENCE OF GOVERNMENTAL INDUSTRIAL HYGIENISTS (ACGIH)

ACGIH 0100	(2001; Supplements 2002-2008) Documentation of the Threshold Limit Values and Biological Exposure Indices

ASTM INTERNATIONAL (ASTM)

ASTM C920	(2014a) Standard Specification for Elastomeric Joint Sealants
ASTM D235	(2002; R 2012) Mineral Spirits (Petroleum Spirits) (Hydrocarbon Dry Cleaning Solvent)
ASTM D2824/D2824M	(2013) Aluminum-Pigmented Asphalt Roof Coatings, Non-Fibered, Asbestos Fibered, and Fibered without Asbestos
ASTM D4214	(2007; R 2015) Standard Test Method for Evaluating the Degree of Chalking of Exterior Paint Films
ASTM D4263	(1983; R 2012) Indicating Moisture in Concrete by the Plastic Sheet Method
ASTM D4444	(2013) Use and Calibration of Hand-Held Moisture Meters
ASTM D523	(2014) Standard Test Method for Specular Gloss
ASTM D6386	(2010) Standard Practice for Preparation of Zinc (Hot-Dip Galvanized) Coated Iron and Steel Product and Hardware Surfaces for Painting
ASTM F1869	(2011) Measuring Moisture Vapor Emission Rate of Concrete Subfloor Using Anhydrous Calcium Chloride

MASTER PAINTERS INSTITUTE (MPI)

MPI 1	(Oct 2009) Aluminum Paint
MPI 101	(Oct 2009) Epoxy Anti-Corrosive Metal

	Primer
MPI 107	(Oct 2009) Rust Inhibitive Primer (Water-Based)
MPI 108	(Oct 2009) High Build Epoxy Coating, Low Gloss
MPI 11	(Oct 2009) Exterior Latex, Semi-Gloss, MPI Gloss Level 5
MPI 134	(Oct 2009) Galvanized Primer (Waterbased)
MPI 141	(Oct 2009) Interior High Performance Latex MPI Gloss Level 5
MPI 163	(Oct 2009) Exterior W.B. Light Industrial Coating, Semi-Gloss, MPI Gloss Level 5
MPI 23	(Oct 2009) Surface Tolerant Metal Primer
MPI 26	(Oct 2009) Cementitious Galvanized Metal Primer
MPI 27	(Oct 2009) Exterior / Interior Alkyd Floor Enamel, Gloss
MPI 42	(Oct 2009) Latex Stucco and Masonry Textured Coating
MPI 47	(Oct 2009) Interior Alkyd, Semi-Gloss, MPI Gloss Level 5
MPI 72	(Oct 2009) Polyurethane, Two Component, Pigmented, Gloss
MPI 77	(Oct 2009) Epoxy Gloss
MPI 79	(Oct 2009) Alkyd Anti-Corrosive Metal Primer
MPI 9	(Oct 2009) Exterior Alkyd, Gloss, MPI Gloss Level 6
MPI 94	(Oct 2009) Exterior Alkyd, Semi-Gloss, MPI Gloss Level 5
MPI 95	(Oct 2009) Quick Drying Primer for Aluminum

SCIENTIFIC CERTIFICATION SYSTEMS (SCS)

SCS SP-01	(2000) Environmentally Preferable Product Specification for Architectural and Anti-Corrosive Paints

SOCIETY FOR PROTECTIVE COATINGS (SSPC)

SSPC 7/NACE No.4	(2007; E 2004) Brush-Off Blast Cleaning

SSPC PA 1	(2000; E 2004) Shop, Field, and Maintenance Painting of Steel
SSPC PA Guide 3	(1982; E 1995) A Guide to Safety in Paint Application
SSPC SP 1	(2015) Solvent Cleaning
SSPC SP 10/NACE No. 2	(2007) Near-White Blast Cleaning
SSPC SP 12/NACE No.5	(2002) Surface Preparation and Cleaning of Metals by Waterjetting Prior to Recoating
SSPC SP 2	(1982; E 2000; E 2004) Hand Tool Cleaning
SSPC SP 3	(1982; E 2004) Power Tool Cleaning
SSPC SP 6/NACE No.3	(2007) Commercial Blast Cleaning
SSPC VIS 1	(2002; E 2004) Guide and Reference Photographs for Steel Surfaces Prepared by Dry Abrasive Blast Cleaning
SSPC VIS 3	(2004) Guide and Reference Photographs for Steel Surfaces Prepared by Hand and Power Tool Cleaning
SSPC VIS 4/NACE VIS 7	(1998; E 2000; E 2004) Guide and Reference Photographs for Steel Surfaces Prepared by Waterjetting

U.S. ARMY CORPS OF ENGINEERS (USACE)

EM 385-1-1	(2014) Safety and Health Requirements Manual

U.S. DEPARTMENT OF DEFENSE (DOD)

MIL-STD-101	(2014; Rev C) Color Code for Pipelines and for Compressed Gas Cylinders

U.S. NATIONAL ARCHIVES AND RECORDS ADMINISTRATION (NARA)

29 CFR 1910.1000	Air Contaminants

1.2 SUBMITTALS

Government approval is required for submittals with a "G" designation; submittals not having a "G" designation are for Contractor Quality Control approval. Submit the following in accordance with Section 01 33 00 SUBMITTAL PROCEDURES:

The current MPI, "Approved Product List" which lists paint by brand, label, product name and product code as of the date of contract award, will be used to determine compliance with the submittal requirements of this specification. The Contractor may choose to use a subsequent MPI "Approved Product List", however, only one list may be used for the entire contract and each coating system is to be from a single manufacturer. All coats on a particular substrate must be from a single manufacturer. No

variation from the MPI Approved Products List is acceptable.

Samples of specified materials may be taken and tested for compliance with specification requirements.

In keeping with the intent of Executive Order 13101, "Greening the Government through Waste Prevention, Recycling, and Federal Acquisition", products certified by SCS as meeting SCS SP-01 shall be given preferential consideration over registered products. Products that are registered shall be given preferential consideration over products not carrying any EPP designation.

SD-02 Shop Drawings

Piping identification

Submit color stencil codes

SD-03 Product Data

Materials
Coating; G
Manufacturer's Technical Data Sheets

Indicate VOC content.

Sealant

SD-07 Certificates

Applicator's Qualifications
Manufacturer's Material Safety Data Sheets

1.3 APPLICATOR'S QUALIFICATIONS

1.3.1 Contractor Qualification

Submit the name, address, telephone number, FAX number, and e-mail address of the contractor that will be performing all surface preparation and coating application. Submit evidence that key personnel have successfully performed surface preparation and application of coatings on a minimum of three similar projects within the past three years. List information by individual and include the following:

a. Name of individual and proposed position for this work.

b. Information about each previous assignment including:

Position or responsibility

Employer (if other than the Contractor)

Name of facility owner

Mailing address, telephone number, and telex number (if non-US) of facility owner

Name of individual in facility owner's organization who can be contacted as a reference

Location, size and description of structure

Dates work was carried out

Description of work carried out on structure

1.4 REGULATORY REQUIREMENTS

1.4.1 Environmental Protection

In addition to requirements specified elsewhere for environmental protection, provide coating materials that conform to the restrictions of the local Air Pollution Control District and regional jurisdiction. Notify Contracting Officer of any paint specified herein which fails to conform.

1.4.2 Lead Content

Do not use coatings having a lead content over 0.06 percent by weight of nonvolatile content.

1.4.3 Chromate Content

Do not use coatings containing zinc-chromate or strontium-chromate.

1.4.4 Asbestos Content

Materials shall not contain asbestos.

1.4.5 Mercury Content

Materials shall not contain mercury or mercury compounds.

1.4.6 Silica

Abrasive blast media shall not contain free crystalline silica.

1.4.7 Human Carcinogens

Materials shall not contain ACGIH 0100 confirmed human carcinogens (A1) or suspected human carcinogens (A2).

1.5 PACKAGING, LABELING, AND STORAGE

Paints shall be in sealed containers that legibly show the contract specification number, designation name, formula or specification number, batch number, color, quantity, date of manufacture, manufacturer's formulation number, manufacturer's directions including any warnings and special precautions, and name and address of manufacturer. Pigmented paints shall be furnished in containers not larger than 5 gallons. Paints and thinners shall be stored in accordance with the manufacturer's written directions, and as a minimum, stored off the ground, under cover, with sufficient ventilation to prevent the buildup of flammable vapors, and at temperatures between 40 to 95 degrees F. Do not store paint, polyurethane, varnish, or wood stain products with materials that have a high capacity to adsorb VOC emissions. Do not store paint, polyurethane, varnish, or wood stain products in occupied spaces.

1.6 SAFETY AND HEALTH

Apply coating materials using safety methods and equipment in accordance with the following:

Work shall comply with applicable Federal, State, and local laws and regulations, and with the ACCIDENT PREVENTION PLAN, including the Activity Hazard Analysis as specified in Section 01 35 26 GOVERNMENT SAFETY REQUIREMENTS and in Appendix A of EM 385-1-1. The Activity Hazard Analysis shall include analyses of the potential impact of painting operations on painting personnel and on others involved in and adjacent to the work zone.

1.6.1 Safety Methods Used During Coating Application

Comply with the requirements of SSPC PA Guide 3.

1.6.2 Toxic Materials

To protect personnel from overexposure to toxic materials, conform to the most stringent guidance of:

a. The applicable manufacturer's Material Safety Data Sheets (MSDS) or local regulation.

b. 29 CFR 1910.1000.

c. ACGIH 0100, threshold limit values.

1.7 ENVIRONMENTAL CONDITIONS

Comply, at minimum, with manufacturer recommendations for space ventilation during and after installation.

1.7.1 Coatings

Do not apply coating when air or substrate conditions are:

a. Less than 5 degrees F above dew point;

b. Below 50 degrees F or over 95 degrees F, unless specifically pre-approved by the Contracting Officer and the product manufacturer. Under no circumstances shall application conditions exceed manufacturer recommendations.

1.8 LOCATION AND SURFACE TYPE TO BE PAINTED

1.8.1 Painting Included

Where a space or surface is indicated to be painted, include the following unless indicated otherwise.

a. Surfaces behind portable objects and surface mounted articles readily detachable by removal of fasteners, such as screws and bolts.

b. New factory finished surfaces that require identification or color coding and factory finished surfaces that are damaged during performance of the work.

c. Existing coated surfaces that are damaged during performance of the work.

1.8.1.1 Exterior Painting

Includes new surfaces of the building and appurtenances. Also included are existing coated surfaces made bare by cleaning operations.

1.8.1.2 Interior Painting

Includes new surfaces of the buildings and appurtenances as indicated and existing coated surfaces made bare by cleaning operations. Where a space or surface is indicated to be painted, include the following items, unless indicated otherwise.

a. Exposed columns, girders, beams, joists, and metal deck; and

b. Other contiguous surfaces.

1.8.2 Painting Excluded

Do not paint the following unless indicated otherwise.

a. Surfaces concealed and made inaccessible by panelboards, fixed ductwork, machinery, and equipment fixed in place.

b. Surfaces in concealed spaces. Concealed spaces are defined as enclosed spaces above suspended ceilings, furred spaces, attic spaces, crawl spaces, elevator shafts and chases.

c. Steel to be embedded in concrete.

d. Copper, stainless steel, aluminum, brass, and lead except existing coated surfaces.

e. Hardware, fittings, and other factory finished items.

1.8.3 Definitions and Abbreviations

1.8.3.1 Qualification Testing

Qualification testing is the performance of all test requirements listed in the product specification. This testing is accomplished by MPI to qualify each product for the MPI Approved Product List, and may also be accomplished by Contractor's third party testing lab if an alternative to Batch Quality Conformance Testing by MPI is desired.

1.8.3.2 Batch Quality Conformance Testing

Batch quality conformance testing determines that the product provided is the same as the product qualified to the appropriate product specification. This testing shall only be accomplished by MPI testing lab.

1.8.3.3 Coating

A film or thin layer applied to a base material called a substrate. A coating may be a metal, alloy, paint, or solid/liquid suspensions on various substrates (metals, plastics, wood, paper, leather, cloth, etc.). They may be applied by electrolysis, vapor deposition, vacuum, or

mechanical means such as brushing, spraying, calendaring, and roller coating. A coating may be applied for aesthetic or protective purposes or both. The term "coating" as used herein includes emulsions, enamels, stains, varnishes, sealers, epoxies, and other coatings, whether used as primer, intermediate, or finish coat. The terms paint and coating are used interchangeably.

1.8.3.4 DFT or dft

Dry film thickness, the film thickness of the fully cured, dry paint or coating.

1.8.3.5 DSD

Degree of Surface Degradation, the MPI system of defining degree of surface degradation. Five (5) levels are generically defined under the Assessment sections in the MPI Maintenance Repainting Manual.

1.8.3.6 EPP

Environmentally Preferred Products, a standard for determining environmental preferability in support of Executive Order 13101.

1.8.3.7 EXT

MPI short term designation for an exterior coating system.

1.8.3.8 INT

MPI short term designation for an interior coating system.

1.8.3.9 micron / microns

The metric measurement for 0.001 mm or one/one-thousandth of a millimeter.

1.8.3.10 mil / mils

The English measurement for 0.001 in or one/one-thousandth of an inch, equal to 25.4 microns or 0.0254 mm.

1.8.3.11 mm

The metric measurement for millimeter, 0.001 meter or one/one-thousandth of a meter.

1.8.3.12 MPI Gloss Levels

MPI system of defining gloss. Seven (7) gloss levels (G1 to G7) are generically defined under the Evaluation sections of the MPI Manuals. Traditionally, Flat refers to G1/G2, Eggshell refers to G3, Semigloss refers to G5, and Gloss refers to G6.

Gloss levels are defined by MPI as follows:

Gloss Level	Description	Units at 60 degrees	Units at 85 degrees
G1	Matte or Flat	0 to 5	10 max
G2	Velvet	0 to 10	10 to 35

Gloss Level	Description	Units at 60 degrees	Units at 85 degrees
G3	Eggshell	10 to 25	10 to 35
G4	Satin	20 to 35	35 min
G5	Semi-Gloss	35 to 70	
G6	Gloss	70 to 85	
G7	High Gloss		

Gloss is tested in accordance with ASTM D523. Historically, the Government has used Flat (G1 / G2), Eggshell (G3), Semi-Gloss (G5), and Gloss (G6).

1.8.3.13 MPI System Number

The MPI coating system number in each Division found in either the MPI Architectural Painting Specification Manual or the Maintenance Repainting Manual and defined as an exterior (EXT/REX) or interior system (INT/RIN). The Division number follows the CSI Master Format.

1.8.3.14 Paint

See Coating definition.

1.8.3.15 REX

MPI short term designation for an exterior coating system used in repainting projects or over existing coating systems.

1.8.3.16 RIN

MPI short term designation for an interior coating system used in repainting projects or over existing coating systems.

PART 2 PRODUCTS

2.1 MATERIALS

Conform to the coating specifications and standards referenced in PART 3. Submit manufacturer's technical data sheets for specified coatings and solvents. Comply with applicable regulations regarding toxic and hazardous materials.

PART 3 EXECUTION

3.1 PROTECTION OF AREAS AND SPACES NOT TO BE PAINTED

Prior to surface preparation and coating applications, remove, mask, or otherwise protect, hardware, hardware accessories, machined surfaces, radiator covers, plates, lighting fixtures, public and private property, and other such items not to be coated that are in contact with surfaces to be coated. Following completion of painting, workmen skilled in the trades involved shall reinstall removed items. Restore surfaces contaminated by coating materials, to original condition and repair damaged items.

3.2 RESEALING OF EXISTING EXTERIOR JOINTS

3.2.1 Surface Condition

Surfaces shall be clean, dry to the touch, and free from frost and moisture; remove grease, oil, wax, lacquer, paint, defective backstop, or other foreign matter that would prevent or impair adhesion. Where adequate grooves have not been provided, clean out to a depth of 1/2 inch and grind to a minimum width of 1/4 inch without damage to adjoining work. Grinding shall not be required on metal surfaces.

3.2.2 Backstops

In joints more than 1/2 inch deep, install glass fiber roving or neoprene, butyl, polyurethane, or polyethylene foams free of oil or other staining elements as recommended by sealant manufacturer. Backstop material shall be compatible with sealant. Do not use oakum and other types of absorptive materials as backstops.

3.2.3 Primer and Bond Breaker

Install the type recommended by the sealant manufacturer.

3.2.4 Ambient Temperature

Between 38 degrees F and 95 degrees F when applying sealant.

3.2.5 Exterior Sealant

For joints in vertical surfaces, provide ASTM C920, Type S or M, Grade NS, Class 25, Use NT. For joints in horizontal surfaces, provide ASTM C920, Type S or M, Grade P, Class 25, Use T. Color(s) shall be selected by the Contracting Officer. Apply the sealant in accordance with the manufacturer's printed instructions. Force sealant into joints with sufficient pressure to fill the joints solidly. Sealant shall be uniformly smooth and free of wrinkles.

3.2.6 Cleaning

Immediately remove fresh sealant from adjacent areas using a solvent recommended by the sealant manufacturer. Upon completion of sealant application, remove remaining smears and stains and leave the work in a clean condition. Allow sealant time to cure, in accordance with manufacturer's recommendations, prior to coating.

3.3 SURFACE PREPARATION

Remove dirt, splinters, loose particles, grease, oil, disintegrated coatings, and other foreign matter and substances deleterious to coating performance as specified for each substrate before application of paint or surface treatments. Oil and grease shall be removed prior to mechanical cleaning. Cleaning shall be programmed so that dust and other contaminants will not fall on wet, newly painted surfaces. Exposed ferrous metals such as nail heads on or in contact with surfaces to be painted with water-thinned paints, shall be spot-primed with a suitable corrosion-inhibitive primer capable of preventing flash rusting and compatible with the coating specified for the adjacent areas.

3.3.1 Additional Requirements for Preparation of Surfaces With Existing Coatings

Before application of coatings, perform the following on surfaces covered by soundly-adhered coatings, defined as those which cannot be removed with a putty knife:

a. Test existing finishes for lead before sanding, scraping, or removing. If lead is present, refer to paragraph Toxic Materials.

b. Wipe previously painted surfaces to receive solvent-based coatings, except stucco and similarly rough surfaces clean with a clean, dry cloth saturated with mineral spirits, ASTM D235. Allow surface to dry. Wiping shall immediately precede the application of the first coat of any coating, unless specified otherwise.

c. Sand existing glossy surfaces to be painted to reduce gloss. Brush, and wipe clean with a damp cloth to remove dust.

d. The requirements specified are minimum. Comply also with the application instructions of the paint manufacturer.

e. Previously painted surfaces specified to be repainted shall be thoroughly cleaned of all grease, dirt, dust or other foreign matter.

f. Blistering, cracking, flaking and peeling or other deteriorated coatings shall be removed.

g. Chalk shall be removed so that when tested in accordance with ASTM D4214, the chalk resistance rating is no less than 8.

h. Slick surfaces shall be roughened. Damaged areas such as, but not limited to, nail holes, cracks, chips, and spalls shall be repaired with suitable material to match adjacent undamaged areas.

i. Edges of chipped paint shall be feather edged and sanded smooth.

j. Rusty metal surfaces shall be cleaned as per SSPC requirements. Solvent, mechanical, or chemical cleaning methods shall be used to provide surfaces suitable for painting.

k. New, proposed coatings shall be compatible with existing coatings.

3.3.2 Existing Coated Surfaces with Minor Defects

Sand, spackle, and treat minor defects to render them smooth. Minor defects are defined as scratches, nicks, cracks, gouges, spalls, alligatoring, chalking, and irregularities due to partial peeling of previous coatings.

3.3.3 Removal of Existing Coatings

Remove existing coatings from the following surfaces:

a. Surfaces containing large areas of minor defects;

b. Surfaces containing more than 20 percent peeling area; and

c. Surfaces designated by the Contracting Officer, such as surfaces where

rust shows through existing coatings.

3.3.4 Substrate Repair

a. Repair substrate surface damaged during coating removal;

b. Sand edges of adjacent soundly-adhered existing coatings so they are tapered as smooth as practical to areas involved with coating removal; and

c. Clean and prime the substrate as specified.

3.4 PREPARATION OF METAL SURFACES

3.4.1 Existing and New Ferrous Surfaces

a. Ferrous Surfaces including Shop-coated Surfaces and Small Areas That Contain Rust, Mill Scale and Other Foreign Substances: detergent wash in accordance with SSPC SP 1 to remove oil and grease. Where shop coat is missing or damaged, clean according to SSPC SP 2, , , or . ; Shop-coated ferrous surfaces shall be protected from corrosion by treating and touching up corroded areas immediately upon detection.

b. Surfaces With More Than 20 Percent Rust, Mill Scale, and Other Foreign Substances: Clean entire surface in accordance with SSPC SP 10/NACE No. 2/SSPC SP 12/NACE No.5 WJ-2.

3.4.2 Final Ferrous Surface Condition:

For tool cleaned surfaces, the requirements are stated in SSPC SP 2 and SSPC SP 3. As a visual reference, cleaned surfaces shall be similar to photographs in SSPC VIS 3.

For abrasive blast cleaned surfaces, the requirements are stated in SSPC 7/NACE No.4, SSPC SP 6/NACE No.3, and SSPC SP 10/NACE No. 2. As a visual reference, cleaned surfaces shall be similar to photographs in SSPC VIS 1.

For waterjet cleaned surfaces, the requirements are stated in SSPC SP 12/NACE No.5. As a visual reference, cleaned surfaces shall be similar to photographs in SSPC VIS 4/NACE VIS 7.

3.4.3 Galvanized Surfaces

a. New or Existing Galvanized Surfaces With Only Dirt and Zinc Oxidation Products: Clean with non-alkaline detergent solution in accordance with SSPC SP 1. If the galvanized metal has been passivated or stabilized, the coating shall be completely removed by brush-off abrasive blast. New galvanized steel to be coated shall not be "passivated" or "stabilized" If the absence of hexavalent stain inhibitors is not documented, test as described in ASTM D6386, Appendix X2, and remove by one of the methods described therein.

b. Galvanized with Slight Coating Deterioration or with Little or No Rusting: Water jetting to SSPC SP 12/NACE No.5 WJ3 to remove loose coating from surfaces with less than 20 percent coating deterioration and no blistering, peeling, or cracking. Use inhibitor as recommended by the coating manufacturer to prevent rusting.

c. Galvanized With Severe Deteriorated Coating or Severe Rusting: Spot abrasive blast rusted areas as described for steel in SSPC SP 6/NACE No.3, and waterjet to SSPC SP 12/NACE No.5, WJ3 to remove existing coating.

3.4.4 Non-Ferrous Metallic Surfaces

Aluminum and aluminum-alloy, lead, copper, and other nonferrous metal surfaces.

Surface Cleaning: Solvent clean in accordance with SSPC SP 1 and wash with mild non-alkaline detergent to remove dirt and water soluble contaminants.

3.4.5 Terne-Coated Metal Surfaces

Solvent clean surfaces with mineral spirits, ASTM D235. Wipe dry with clean, dry cloths.

3.5 PREPARATION OF CONCRETE AND CEMENTITIOUS SURFACE

3.5.1 Concrete and Masonry

a. Curing: Concrete, stucco and masonry surfaces shall be allowed to cure at least 30 days before painting, except concrete slab on grade, which shall be allowed to cure 90 days before painting.

b. Surface Cleaning: Remove the following deleterious substances.

(1) Dirt, Grease, and Oil: Wash new and existing uncoated surfaces with a solution composed of 1/2 cup trisodium phosphate, 1/4 cup household detergent, and 4 quarts of warm water. Then rinse thoroughly with fresh water. Wash existing coated surfaces with a suitable detergent and rinse thoroughly. For large areas, water blasting may be used.

(2) Fungus and Mold: Wash , existing coated, and existing uncoated surfaces with a solution composed of 1/2 cup trisodium phosphate, 1/4 cup household detergent, 1 quart 5 percent sodium hypochlorite solution and 3 quarts of warm water. Rinse thoroughly with fresh water.

(3) Paint and Loose Particles: Remove by wire brushing.

(4) Efflorescence: Remove by scraping or wire brushing followed by washing with a 5 to 10 percent by weight aqueous solution of hydrochloric (muriatic) acid. Do not allow acid to remain on the surface for more than five minutes before rinsing with fresh water. Do not acid clean more than 4 square feet of surface, per workman, at one time.

(5) Removal of Existing Coatings: For surfaces to receive textured coating MPI 42, remove existing coatings including soundly adhered coatings if recommended by textured coating manufacturer.

c. Cosmetic Repair of Minor Defects: Repair or fill mortar joints and minor defects, including but not limited to spalls, in accordance with manufacturer's recommendations and prior to coating application.

d. Allowable Moisture Content: Latex coatings may be applied to damp surfaces, but not to surfaces with droplets of water. Do not apply epoxies to damp vertical surfaces as determined by ASTM D4263 or horizontal surfaces that exceed 3 lbs of moisture per 1000 square feet in 24 hours as determined by ASTM F1869. In all cases follow manufacturers recommendations. Allow surfaces to cure a minimum of 30 days before painting.

3.5.2 Gypsum Board, Plaster, and Stucco

a. Surface Cleaning: Plaster and stucco shall be clean and free from loose matter; gypsum board shall be dry. Remove loose dirt and dust by brushing with a soft brush, rubbing with a dry cloth, or vacuum-cleaning prior to application of the first coat material. A damp cloth or sponge may be used if paint will be water-based.

b. Repair of Minor Defects: Prior to painting, repair joints, cracks, holes, surface irregularities, and other minor defects with patching plaster or spackling compound and sand smooth.

c. Allowable Moisture Content: Latex coatings may be applied to damp surfaces, but not surfaces with droplets of water. Do not apply epoxies to damp surfaces as determined by ASTM D4263. New plaster to be coated shall have a maximum moisture content of 8 percent, when measured in accordance with ASTM D4444, Method A, unless otherwise authorized. In addition to moisture content requirements, allow new plaster to age a minimum of 30 days before preparation for painting.

3.6 APPLICATION

3.6.1 Coating Application

Painting practices shall comply with applicable federal, state and local laws enacted to insure compliance with Federal Clean Air Standards. Apply coating materials in accordance with SSPC PA 1. SSPC PA 1 methods are applicable to all substrates, except as modified herein.

At the time of application, paint shall show no signs of deterioration. Uniform suspension of pigments shall be maintained during application.

Unless otherwise specified or recommended by the paint manufacturer, paint may be applied by brush, roller, or spray. Use trigger operated spray nozzles for water hoses. Rollers for applying paints and enamels shall be of a type designed for the coating to be applied and the surface to be coated. Wear protective clothing and respirators when applying oil-based paints or using spray equipment with any paints.

Paints, except water-thinned types, shall be applied only to surfaces that are completely free of moisture as determined by sight or touch.

Thoroughly work coating materials into joints, crevices, and open spaces. Special attention shall be given to insure that all edges, corners, crevices, welds, and rivets receive a film thickness equal to that of adjacent painted surfaces.

Each coat of paint shall be applied so dry film shall be of uniform thickness and free from runs, drops, ridges, waves, pinholes or other voids, laps, brush marks, and variations in color, texture, and finish. Hiding shall be complete.

Touch up damaged coatings before applying subsequent coats. Interior areas shall be broom clean and dust free before and during the application of coating material.

a. Drying Time: Allow time between coats, as recommended by the coating manufacturer, to permit thorough drying, but not to present topcoat adhesion problems. Provide each coat in specified condition to receive next coat.

b. Primers, and Intermediate Coats: Do not allow primers or intermediate coats to dry more than 30 days, or longer than recommended by manufacturer, before applying subsequent coats. Follow manufacturer's recommendations for surface preparation if primers or intermediate coats are allowed to dry longer than recommended by manufacturers of subsequent coatings. Each coat shall cover surface of preceding coat or surface completely, and there shall be a visually perceptible difference in shades of successive coats.

c. Finished Surfaces: Provide finished surfaces free from runs, drops, ridges, waves, laps, brush marks, and variations in colors.

d. Thermosetting Paints: Topcoats over thermosetting paints (epoxies and urethanes) should be applied within the overcoating window recommended by the manufacturer.

e. Floors: For nonslip surfacing on level floors, as the intermediate coat is applied, cover wet surface completely with almandite garnet, Grit No. 36, with maximum passing U.S. Standard Sieve No. 40 less than 0.5 percent. When the coating is dry, use a soft bristle broom to sweep up excess grit, which may be reused, and vacuum up remaining residue before application of the topcoat. For nonslip surfacing on ramps, provide MPI 77 with non-skid additive, applied by roller in accordance with manufacturer's instructions.

3.6.2 Mixing and Thinning of Paints

Reduce paints to proper consistency by adding fresh paint, except when thinning is mandatory to suit surface, temperature, weather conditions, application methods, or for the type of paint being used. Obtain written permission from the Contracting Officer to use thinners. The written permission shall include quantities and types of thinners to use.

When thinning is allowed, paints shall be thinned immediately prior to application with not more than 1 pint of suitable thinner per gallon. The use of thinner shall not relieve the Contractor from obtaining complete hiding, full film thickness, or required gloss. Thinning shall not cause the paint to exceed limits on volatile organic compounds. Paints of different manufacturers shall not be mixed.

3.6.3 Two-Component Systems

Two-component systems shall be mixed in accordance with manufacturer's instructions. Any thinning of the first coat to ensure proper penetration and sealing shall be as recommended by the manufacturer for each type of substrate.

3.6.4 Coating Systems

a. Systems by Substrates: Apply coatings that conform to the respective specifications listed in the following Tables:

Table

Division 5. Exterior Metal, Ferrous and Non-Ferrous Paint Table

Division 5. Interior Metal, Ferrous and Non-Ferrous Paint Table

b. Minimum Dry Film Thickness (DFT): Apply paints, primers, varnishes, enamels, undercoats, and other coatings to a minimum dry film thickness of 1.5 mil each coat unless specified otherwise in the Tables. Coating thickness where specified, refers to the minimum dry film thickness.

c. Coatings for Surfaces Not Specified Otherwise: Coat surfaces which have not been specified, the same as surfaces having similar conditions of exposure.

d. Existing Surfaces Damaged During Performance of the Work, Including New Patches In Existing Surfaces: Coat surfaces with the following:

(1) One coat of primer.

(2) One coat of undercoat or intermediate coat.

(3) One topcoat to match adjacent surfaces.

e. Existing Coated Surfaces To Be Painted: Apply coatings conforming to the respective specifications listed in the Tables herein, except that pretreatments, sealers and fillers need not be provided on surfaces where existing coatings are soundly adhered and in good condition. Do not omit undercoats or primers.

3.7 COATING SYSTEMS FOR METAL

Apply coatings of Tables in Division 5 for Exterior and Interior.

a. Apply specified ferrous metal primer on the same day that surface is cleaned, to surfaces that meet all specified surface preparation requirements at time of application.

b. Inaccessible Surfaces: Prior to erection, use one coat of specified primer on metal surfaces that will be inaccessible after erection.

c. Shop-primed Surfaces: Touch up exposed substrates and damaged coatings to protect from rusting prior to applying field primer.

d. Surface Previously Coated with Epoxy or Urethane: Apply MPI 101, 1.5 mils DFT immediately prior to application of epoxy or urethane coatings.

e. Pipes and Tubing: The semitransparent film applied to some pipes and tubing at the mill is not to be considered a shop coat, but shall be overcoated with the specified ferrous-metal primer prior to

application of finish coats.

f. Exposed Nails, Screws, Fasteners, and Miscellaneous Ferrous Surfaces. On surfaces to be coated with water thinned coatings, spot prime exposed nails and other ferrous metal with latex primer MPI 107.

3.8 COATING SYSTEMS FOR CONCRETE AND CEMENTITIOUS SUBSTRATES

Apply coatings of Tables in Division 3, 4 and 9 for Exterior and Interior.

3.9 COATING SYSTEMS FOR WOOD AND PLYWOOD

a. Apply coatings of Tables in Division 6 for Exterior and Interior.

b. Prior to erection, apply two coats of specified primer to treat and prime wood surfaces which will be inaccessible after erection.

c. Apply stains in accordance with manufacturer's printed instructions.

3.10 PIPING IDENTIFICATION

Piping Identification, Including Surfaces In Concealed Spaces: Provide in accordance with MIL-STD-101. Place stenciling in clearly visible locations. On piping not covered by MIL-STD-101, stencil approved names or code letters, in letters a minimum of 1/2 inch high for piping and a minimum of 2 inches high elsewhere. Stencil arrow-shaped markings on piping to indicate direction of flow using black stencil paint.

3.11 INSPECTION AND ACCEPTANCE

In addition to meeting previously specified requirements, demonstrate mobility of moving components, including swinging and sliding doors, cabinets, and windows with operable sash, for inspection by the Contracting Officer. Perform this demonstration after appropriate curing and drying times of coatings have elapsed and prior to invoicing for final payment.

3.12 WASTE MANAGEMENT

As specified in the Waste Management Plan and as follows. Do not use kerosene or any such organic solvents to clean up water based paints. Properly dispose of paints or solvents in designated containers. Close and seal partially used containers of paint to maintain quality as necessary for reuse. Store in protected, well-ventilated, fire-safe area at moderate temperature. Place materials defined as hazardous or toxic waste in designated containers. Set aside extra paint for future color matches or reuse by the Government.

3.13 PAINT TABLES

All DFT's are minimum values. Acceptable products are listed in the MPI Green Approved Products List, available at http://www.specifygreen.com/APL/ProductIdxByMPInum.asp.

3.13.1 EXTERIOR PAINT TABLES

DIVISION 5: EXTERIOR METAL, FERROUS AND NON-FERROUS PAINT TABLE

STEEL / FERROUS SURFACES

STEEL / FERROUS SURFACES

A. New Steel that has been hand or power tool cleaned to SSPC SP 2 or SSPC SP 3

1. Alkyd
New; MPI EXT 5.1Q-G5 (Semigloss) Existing; MPI REX 5.1D-G5

Primer:	Intermediate:	Topcoat:
MPI 23	MPI 94	MPI 94

System DFT: 5.25 mils

New; MPI EXT 5.1Q-G6 (Gloss) / Existing; MPI REX 5.1D-G6

Primer:	Intermediate:	Topcoat:
MPI 23	MPI 9	MPI 9

System DFT: 5.25 mils

B. New Steel that has been blast-cleaned to SSPC SP 6/NACE No.3:

1. Alkyd
New; MPI EXT 5.1D-G5 (Semigloss) / Existing; MPI REX 5.1D-G5

Primer:	Intermediate:	Topcoat:
MPI 79	MPI 94	MPI 94

System DFT: 5.25 mils

New; MPI EXT 5.1D-G6 (Gloss) / Existing; MPI REX 5.1D-G6

Primer:	Intermediate:	Topcoat:
MPI 79	MPI 9	MPI 9

System DFT: 5.25 mils

C. Existing steel that has been spot-blasted to SSPC SP 6/NACE No.3:

1. Surface previously coated with alkyd or latex:

Waterborne Light Industrial Coating
MPI REX 5.1C-G5 (Semigloss)

Spot Primer:	Intermediate:	Topcoat:
MPI 79	MPI 163	MPI 163

System DFT: 5 mils

D. New and existing steel blast cleaned to SSPC SP 10/NACE No. 2:

1. Waterborne Light Industrial
MPI EXT 5.1R-G5 (Semigloss)

Primer:	Intermediate:	Topcoat:
MPI 101	MPI 108	MPI 163

System DFT: 8.5 mils

E. Metal floors (non-shop-primed surfaces or non-slip deck surfaces) with non-skid additive (NSA), load at manufacturer's recommendations.:

1. Alkyd Floor Enamel
MPI EXT 5.1S-G6 (Gloss)

Primer:	Intermediate:	Topcoat:
MPI 79	MPI 27	MPI 27 (plus NSA)

System DFT: 5.25 mils

EXTERIOR GALVANIZED SURFACES

EXTERIOR GALVANIZED SURFACES

A. New Galvanized surfaces:

1. Cementitious primer / Latex

MPI EXT 5.3A-G5 (Semigloss)

Primer:	Intermediate:	Topcoat:
MPI 26	MPI 11	MPI 11

System DFT: 4.5 mils

2. Waterborne Primer / Latex

MPI EXT 5.3H-G5 (Semigloss)

Primer:	Intermediate:	Topcoat:
MPI 134	MPI 11	MPI 11

System DFT: 4.5 mils

3. Waterborne Primer / Waterborne Light Industrial Coating

MPI EXT 5.3J-G5 (Semigloss)

Primer:	Intermediate:	Topcoat:
MPI 134	MPI 163	MPI 163

System DFT: 4.5 mils

4. Epoxy Primer / Waterborne Light Industrial Coating

MPI EXT 5.3K-G5 (Semigloss)

Primer:	Intermediate:	Topcoat:
MPI 101	MPI 163	MPI 163

System DFT: 5 mils

5. Pigmented Polyurethane

MPI EXT 5.3L-G6 (Gloss)

Primer:	Intermediate:	Topcoat:
MPI 101	N/A	MPI 72

System DFT: 5 mils

G. Galvanized surfaces with slight coating deterioration; little or no rusting:

1. Waterborne Light Industrial Coating

MPI REX 5.3J-G5 (Semigloss)

Primer:	Intermediate:	Topcoat:
MPI 134	N/A	MPI 163

System DFT: 4.5 mils

H. Galvanized surfaces with severely deteriorated coating or rusting:

1. Waterborne Light Industrial Coating

MPI REX 5.3L-G5(Semigloss)

Primer:	Intermediate:	Topcoat:
MPI 101	MPI 108	MPI 163

System DFT: 8.5 mils

EXTERIOR SURFACES, OTHER METALS (NON-FERROUS)

EXTERIOR SURFACES, OTHER METALS (NON-FERROUS)

A. Aluminum, aluminum alloy and other miscellaneous non-ferrous metal items not otherwise specified except hot metal surfaces, roof surfaces, and new prefinished equipment. Match surrounding finish:

1. Alkyd

   MPI EXT 5.4F-G5 (Semigloss)

Primer:	Intermediate:	Topcoat:
MPI 95	MPI 94	MPI 94

   System DFT: 5 mils

2. Waterborne Light Industrial Coating

   MPI EXT 5.4G-G5(Semigloss)

Primer:	Intermediate:	Topcoat:
MPI 95	MPI 163	MPI 163

   System DFT: 5 mils

B. Existing roof surfaces previously coated:

1. Aluminum Pigmented Asphalt Roof Coating
   ASTM D2824/D2824M: Sufficient coats to provide not less than 8 mils of finished coating system (without asbestos fibers).

2. Aluminum Paint
   MPI REX 10.2D

Primer:	Intermediate:	Topcoat:
MPI 107	MPI 1	MPI 1

   System DFT: 3.5 mils

J. Surfaces adjacent to painted surfaces; Mechanical, Electrical,exposed copper piping, and miscellaneous metal items not otherwise specified except floors, hot metal surfaces, and new prefinished equipment. Match surrounding finish:

1. Alkyd

   MPI EXT 5.1D-G5 (Semigloss)

Primer:	Intermediate:	Topcoat:
MPI 79	MPI 94	MPI 94

   System DFT: 5.25 mils

2. Waterborne Light Industrial Coating

   MPI EXT 5.1C-G5(Semigloss)

Primer:	Intermediate:	Topcoat:
MPI 79	MPI 163	MPI 163

   System DFT: 5 mils

3.13.2 INTERIOR PAINT TABLES

DIVISION 5: INTERIOR METAL, FERROUS AND NON-FERROUS PAINT TABLE

INTERIOR STEEL / FERROUS SURFACES

A. Metal, Mechanical, Electrical,Surfaces adjacent to painted surfaces (Match surrounding finish), exposed copper piping, and miscellaneous metal items not otherwise specified except floors, hot metal surfaces, and new prefinished equipment:

1. High Performance Architectural Latex

MPI INT 5.1R-G5 (Semigloss)

Primer:	Intermediate:	Topcoat:
MPI 79	MPI 141	MPI 141

System DFT: 5 mils

B. Metal floors (non-shop-primed surfaces or non-slip deck surfaces) with non-skid additive (NSA), load at manufacturer's recommendations.:

1. Alkyd Floor Paint

MPI INT 5.1U-G6 (Gloss)

Primer:	Intermediate:	Topcoat:
MPI 79	MPI 27	MPI 27 (plus NSA)

System DFT: 5.25 mils

2. Epoxy

MPI INT 5.1L-G6 (Gloss)

Primer:	Intermediate:	Topcoat:
MPI 101	MPI 77	MPI 77 (plus NSA)

System DFT: 5.25 mils

C. Miscellaneous non-ferrous metal items not otherwise specified except floors, hot metal surfaces, and new prefinished equipment. Match surrounding finish:

1. High Performance Architectural Latex

MPI INT 5.4F-G5 (Semigloss)

Primer:	Intermediate:	Topcoat:
MPI 95	MPI 141	MPI 141

System DFT: 5 mils

2. Alkyd

MPI INT 5.4J-G5 (Semigloss)

Primer:	Intermediate:	Topcoat:
MPI 95	MPI 47	MPI 47

System DFT: 5 mils

-- End of Section --

SECTION 23 03 00.00 20

BASIC MECHANICAL MATERIALS AND METHODS
08/10

PART 1 GENERAL

1.1 REFERENCES

The publications listed below form a part of this specification to the extent referenced. The publications are referred to within the text by the basic designation only.

ASTM INTERNATIONAL (ASTM)

ASTM B117	(2011) Standard Practice for Operating Salt Spray (Fog) Apparatus

1.2 RELATED REQUIREMENTS

This section applies to all sections of Divisions: 21, FIRE SUPPRESSION; 22, PLUMBING; and 23, HEATING, VENTILATING, AND AIR CONDITIONING of this project specification, unless specified otherwise in the individual section.

1.3 QUALITY ASSURANCE

1.3.1 Material and Equipment Qualifications

Provide materials and equipment that are standard products of manufacturers regularly engaged in the manufacture of such products, which are of a similar material, design and workmanship. Standard products must have been in satisfactory commercial or industrial use for 2 years prior to bid opening. The 2-year use must include applications of equipment and materials under similar circumstances and of similar size. The product must have been for sale on the commercial market through advertisements, manufacturers' catalogs, or brochures during the 2 year period.

1.3.2 Alternative Qualifications

Products having less than a two-year field service record will be acceptable if a certified record of satisfactory field operation for not less than 6000 hours, exclusive of the manufacturer's factory or laboratory tests, can be shown.

1.3.3 Service Support

The equipment items must be supported by service organizations. Submit a certified list of qualified permanent service organizations for support of the equipment which includes their addresses and qualifications. These service organizations must be reasonably convenient to the equipment installation and able to render satisfactory service to the equipment on a regular and emergency basis during the warranty period of the contract.

1.3.4 Manufacturer's Nameplate

For each item of equipment, provide a nameplate bearing the manufacturer's name, address, model number, and serial number securely affixed in a

conspicuous place; the nameplate of the distributing agent will not be acceptable.

1.3.5 Modification of References

In each of the publications referred to herein, consider the advisory provisions to be mandatory, as though the word, "must" had been substituted for "should" wherever it appears. Interpret references in these publications to the "authority having jurisdiction", or words of similar meaning, to mean the Contracting Officer.

1.3.5.1 Definitions

For the International Code Council (ICC) Codes referenced in the contract documents, advisory provisions must be considered mandatory, the word "should" is interpreted as "must." Reference to the "code official" must be interpreted to mean the "Contracting Officer." For Navy owned property, references to the "owner" must be interpreted to mean the "Contracting Officer." For leased facilities, references to the "owner" must be interpreted to mean the "lessor." References to the "permit holder" must be interpreted to mean the "Contractor."

1.3.5.2 Administrative Interpretations

For ICC Codes referenced in the contract documents, the provisions of Chapter 1, "Administrator," do not apply. These administrative requirements are covered by the applicable Federal Acquisition Regulations (FAR) included in this contract and by the authority granted to the Officer in Charge of Construction to administer the construction of this project. References in the ICC Codes to sections of Chapter 1, must be applied appropriately by the Contracting Officer as authorized by his administrative cognizance and the FAR.

1.4 DELIVERY, STORAGE, AND HANDLING

Handle, store, and protect equipment and materials to prevent damage before and during installation in accordance with the manufacturer's recommendations, and as approved by the Contracting Officer. Replace damaged or defective items.

1.5 ELECTRICAL REQUIREMENTS

Furnish motors, controllers, disconnects and contactors with their respective pieces of equipment. Motors, controllers, disconnects and contactors must conform to and have electrical connections provided under Section 26 20 00 INTERIOR DISTRIBUTION SYSTEM. Furnish internal wiring for components of packaged equipment as an integral part of the equipment. Extended voltage range motors will not be permitted. Controllers and contactors shall have a maximum of 120 volt control circuits, and must have auxiliary contacts for use with the controls furnished. When motors and equipment furnished are larger than sizes indicated, the cost of additional electrical service and related work must be included under the section that specified that motor or equipment. Power wiring and conduit for field installed equipment must be provided under and conform to the requirements of Section 26 20 00 INTERIOR DISTRIBUTION SYSTEM.

1.6 INSTRUCTION TO GOVERNMENT PERSONNEL

When specified in other sections, furnish the services of competent

instructors to give full instruction to the designated Government personnel in the adjustment, operation, and maintenance, including pertinent safety requirements, of the specified equipment or system. Instructors must be thoroughly familiar with all parts of the installation and must be trained in operating theory as well as practical operation and maintenance work.

Instruction must be given during the first regular work week after the equipment or system has been accepted and turned over to the Government for regular operation. The number of man-days (8 hours per day) of instruction furnished must be as specified in the individual section. When more than 4 man-days of instruction are specified, use approximately half of the time for classroom instruction. Use other time for instruction with the equipment or system.

When significant changes or modifications in the equipment or system are made under the terms of the contract, provide additional instruction to acquaint the operating personnel with the changes or modifications.

1.7 ACCESSIBILITY

Install all work so that parts requiring periodic inspection, operation, maintenance, and repair are readily accessible. Install concealed valves, expansion joints, controls, dampers, and equipment requiring access, in locations freely accessible through access doors.

PART 2 PRODUCTS

NOT USED

PART 3 EXECUTION

3.1 PAINTING OF NEW EQUIPMENT

New equipment painting must be factory applied or shop applied, and must be as specified herein, and provided under each individual section.

3.1.1 Factory Painting Systems

Manufacturer's standard factory painting systems may be provided subject to certification that the factory painting system applied will withstand 125 hours in a salt-spray fog test, except that equipment located outdoors must withstand 500 hours in a salt-spray fog test. Salt-spray fog test must be in accordance with ASTM B117, and for that test the acceptance criteria must be as follows: immediately after completion of the test, the paint must show no signs of blistering, wrinkling, or cracking, and no loss of adhesion; and the specimen must show no signs of rust creepage beyond 0.125 inch on either side of the scratch mark.

The film thickness of the factory painting system applied on the equipment must not be less than the film thickness used on the test specimen. If manufacturer's standard factory painting system is being proposed for use on surfaces subject to temperatures above 120 degrees F, the factory painting system must be designed for the temperature service.

3.1.2 Shop Painting Systems for Metal Surfaces

Clean, pretreat, prime and paint metal surfaces; except aluminum surfaces need not be painted. Apply coatings to clean dry surfaces. Clean the

surfaces to remove dust, dirt, rust, oil and grease by wire brushing and solvent degreasing prior to application of paint, except metal surfaces subject to temperatures in excess of 120 degrees F must be cleaned to bare metal.

Where more than one coat of paint is specified, apply the second coat after the preceding coat is thoroughly dry. Lightly sand damaged painting and retouch before applying the succeeding coat. Color of finish coat must be aluminum or light gray.

a. Temperatures Less Than 120 Degrees F: Immediately after cleaning, the metal surfaces subject to temperatures less than 120 degrees F must receive one coat of pretreatment primer applied to a minimum dry film thickness of 0.3 mil, one coat of primer applied to a minimum dry film thickness of 1 mil; and two coats of enamel applied to a minimum dry film thickness of 1 mil per coat.

b. Temperatures Between 120 and 400 Degrees F: Metal surfaces subject to temperatures between 120 and 400 degrees F must receive two coats of 400 degrees F heat-resisting enamel applied to a total minimum thickness of 2 mils.

c. Temperatures Greater Than 400 Degrees F: Metal surfaces subject to temperatures greater than 400 degrees F must receive two coats of 600 degrees F heat-resisting paint applied to a total minimum dry film thickness of 2 mils.

-- End of Section --

SECTION 23 07 00

THERMAL INSULATION FOR MECHANICAL SYSTEMS
02/13

PART 1 GENERAL

1.1 REFERENCES

The publications listed below form a part of this specification to the extent referenced. The publications are referred to within the text by the basic designation only. At the discretion of the Government, the manufacturer of any material supplied will be required to furnish test reports pertaining to any of the tests necessary to assure compliance with the standard or standards referenced in this specification.

AMERICAN SOCIETY OF HEATING, REFRIGERATING AND AIR-CONDITIONING ENGINEERS (ASHRAE)

ASHRAE 90.1 - IP	(2010) Energy Standard for Buildings Except Low-Rise Residential Buildings

ASTM INTERNATIONAL (ASTM)

ASTM A167	(2011) Standard Specification for Stainless and Heat-Resisting Chromium-Nickel Steel Plate, Sheet, and Strip
ASTM A240/A240M	(2015b) Standard Specification for Chromium and Chromium-Nickel Stainless Steel Plate, Sheet, and Strip for Pressure Vessels and for General Applications
ASTM A580/A580M	(2015) Standard Specification for Stainless Steel Wire
ASTM B209	(2014) Standard Specification for Aluminum and Aluminum-Alloy Sheet and Plate
ASTM C1136	(2012) Standard Specification for Flexible, Low Permeance Vapor Retarders for Thermal Insulation
ASTM C1710	(2011) Standard Guide for Installation of Flexible Closed Cell Preformed Insulation in Tube and Sheet Form
ASTM C195	(2007; R 2013) Standard Specification for Mineral Fiber Thermal Insulating Cement
ASTM C450	(2008) Standard Practice for Fabrication of Thermal Insulating Fitting Covers for NPS Piping, and Vessel Lagging
ASTM C533	(2013) Standard Specification for Calcium Silicate Block and Pipe Thermal Insulation

ASTM C534/C534M	(2014) Standard Specification for Preformed Flexible Elastomeric Cellular Thermal Insulation in Sheet and Tubular Form
ASTM C547	(2015) Standard Specification for Mineral Fiber Pipe Insulation
ASTM C552	(2015) Standard Specification for Cellular Glass Thermal Insulation
ASTM C585	(2010) Standard Practice for Inner and Outer Diameters of Thermal Insulation for Nominal Sizes of Pipe and Tubing
ASTM C612	(2014) Mineral Fiber Block and Board Thermal Insulation
ASTM C647	(2008; R 2013) Properties and Tests of Mastics and Coating Finishes for Thermal Insulation
ASTM C795	(2008; R 2013) Standard Specification for Thermal Insulation for Use in Contact with Austenitic Stainless Steel
ASTM C916	(2014) Standard Specification for Adhesives for Duct Thermal Insulation
ASTM C920	(2014a) Standard Specification for Elastomeric Joint Sealants
ASTM C921	(2010) Standard Practice for Determining the Properties of Jacketing Materials for Thermal Insulation
ASTM D2863	(2013) Measuring the Minimum Oxygen Concentration to Support Candle-Like Combustion of Plastics (Oxygen Index)
ASTM D5590	(2000; R 2010; E 2012) Standard Test Method for Determining the Resistance of Paint Films and Related Coatings to Fungal Defacement by Accelerated Four-Week Agar Plate Assay
ASTM D882	(2012) Tensile Properties of Thin Plastic Sheeting
ASTM E2231	(2015) Specimen Preparation and Mounting of Pipe and Duct Insulation Materials to Assess Surface Burning Characteristics
ASTM E84	(2015b) Standard Test Method for Surface Burning Characteristics of Building Materials
ASTM E96/E96M	(2014) Standard Test Methods for Water

Vapor Transmission of Materials

FM GLOBAL (FM)

FM APP GUIDE	(updated on-line) Approval Guide http://www.approvalguide.com/

INTERNATIONAL ORGANIZATION FOR STANDARDIZATION (ISO)

ISO 2758	(2014) Paper - Determination of Bursting Strength

MANUFACTURERS STANDARDIZATION SOCIETY OF THE VALVE AND FITTINGS INDUSTRY (MSS)

MSS SP-69	(2003; Notice 2012) Pipe Hangers and Supports - Selection and Application (ANSI Approved American National Standard)

MIDWEST INSULATION CONTRACTORS ASSOCIATION (MICA)

MICA Insulation Stds	(1999) National Commercial & Industrial Insulation Standards

NATIONAL FIRE PROTECTION ASSOCIATION (NFPA)

NFPA 90A	(2015) Standard for the Installation of Air Conditioning and Ventilating Systems
NFPA 90B	(2015) Standard for the Installation of Warm Air Heating and Air Conditioning Systems

U.S. DEPARTMENT OF DEFENSE (DOD)

MIL-A-24179	(1969; Rev A; Am 2 1980; Notice 1 1987) Adhesive, Flexible Unicellular-Plastic Thermal Insulation
MIL-A-3316	(1987; Rev C; Am 2 1990) Adhesives, Fire-Resistant, Thermal Insulation
MIL-PRF-19565	(1988; Rev C) Coating Compounds, Thermal Insulation, Fire- and Water-Resistant, Vapor-Barrier

UNDERWRITERS LABORATORIES (UL)

UL 723	(2008; Reprint Aug 2013) Test for Surface Burning Characteristics of Building Materials
UL 94	(2013; Reprint Jul 2015) Standard for Tests for Flammability of Plastic Materials for Parts in Devices and Appliances

1.2 SYSTEM DESCRIPTION

1.2.1 General

Provide field-applied insulation and accessories on mechanical systems as specified herein; factory-applied insulation is specified under the piping, duct or equipment to be insulated.

1.2.2 Recycled Materials

Provide thermal insulation containing recycled materials to the extent practicable, provided that the materials meet all other requirements of this section. The minimum recycled material content of the following insulation are:

Rock Wool	75 percent slag of weight
Fiberglass	20-25 percent glass cullet by weight
Rigid Foam	9 percent recovered material

1.3 SUBMITTALS

Government approval is required for submittals with a "G" designation; submittals not having a "G" designation are for Contractor Quality Control approval. Submit the following in accordance with Section 01 33 00 SUBMITTAL PROCEDURES:

Submit the three SD types, SD-02 Shop Drawings, SD-03 Product Data, and SD-08 Manufacturer's Instructions at the same time for each system.

SD-02 Shop Drawings

MICA Plates; G
Pipe Insulation Systems and Associated Accessories
Duct Insulation Systems and Associated Accessories
Equipment Insulation Systems and Associated Accessories

SD-03 Product Data

Pipe Insulation Systems; G
Duct Insulation Systems; G
Equipment Insulation Systems; G

SD-08 Manufacturer's Instructions

Pipe Insulation Systems; G
Duct Insulation Systems; G
Equipment Insulation Systems; G

1.4 QUALITY ASSURANCE

1.4.1 Installer Qualification

Qualified installers shall have successfully completed three or more similar type jobs within the last 5 years.

1.5 DELIVERY, STORAGE, AND HANDLING

Materials shall be delivered in the manufacturer's unopened containers. Materials delivered and placed in storage shall be provided with protection from weather, humidity, dirt, dust and other contaminants. The Contracting Officer may reject insulation material and supplies that become dirty, dusty, wet, or contaminated by some other means. Packages or standard containers of insulation, jacket material, cements, adhesives, and coatings delivered for use, and samples required for approval shall have manufacturer's stamp or label attached giving the name of the manufacturer and brand, and a description of the material, date codes, and approximate shelf life (if applicable). Insulation packages and containers shall be asbestos free.

PART 2 PRODUCTS

2.1 STANDARD PRODUCTS

Provide materials which are the standard products of manufacturers regularly engaged in the manufacture of such products and that essentially duplicate items that have been in satisfactory use for at least 2 years prior to bid opening. Submit a complete list of materials, including manufacturer's descriptive technical literature, performance data, catalog cuts, and installation instructions. The product number, k-value, thickness and furnished accessories including adhesives, sealants and jackets for each mechanical system requiring insulation shall be included. The product data must be copyrighted, have an identifying or publication number, and shall have been published prior to the issuance date of this solicitation. Materials furnished under this section shall be submitted together in a booklet.

2.1.1 Insulation System

Provide insulation systems in accordance with the approved MICA National Insulation Standards plates as supplemented by this specification. Provide field-applied insulation for heating, ventilating, and cooling (HVAC) air distribution systems and piping systems that are located within, on, under, and adjacent to buildings; and for plumbing systems. Provide CFC and HCFC free insulation.

2.1.2 Surface Burning Characteristics

Unless otherwise specified, insulation must have a maximum flame spread index of 25 and a maximum smoke developed index of 50 when tested in accordance with ASTM E84. Flame spread, and smoke developed indexes, shall be determined by ASTM E84 or UL 723. Test insulation in the same density and installed thickness as the material to be used in the actual construction. Prepare and mount test specimens according to ASTM E2231.

2.2 MATERIALS

Provide insulation that meets or exceed the requirements of ASHRAE 90.1 - IP. Insulation exterior shall be cleanable, grease resistant, non-flaking and non-peeling. Materials shall be compatible and shall not contribute to corrosion, soften, or otherwise attack surfaces to which applied in either wet or dry state. Materials to be used on stainless steel surfaces shall meet ASTM C795 requirements. Calcium silicate shall not be used on chilled or cold water systems. Materials shall be asbestos free. Provide product recognized under UL 94 (if containing plastic) and listed in FM APP GUIDE.

2.2.1 Adhesives

2.2.1.1 Acoustical Lining Insulation Adhesive

Adhesive shall be a nonflammable, fire-resistant adhesive conforming to ASTM C916, Type I.

2.2.1.2 Mineral Fiber Insulation Cement

Cement shall be in accordance with ASTM C195.

2.2.1.3 Lagging Adhesive

Lagging is the material used for thermal insulation, especially around a cylindrical object. This may include the insulation as well as the cloth/material covering the insulation. To resist mold/mildew, lagging adhesive shall meet ASTM D5590 with 0 growth rating. Lagging adhesives shall be nonflammable and fire-resistant and shall have a maximum flame spread index of 25 and a maximum smoke developed index of 50 when tested in accordance with ASTM E84. Adhesive shall be MIL-A-3316, Class 1, pigmented white and be suitable for bonding fibrous glass cloth to faced and unfaced fibrous glass insulation board; for bonding cotton brattice cloth to faced and unfaced fibrous glass insulation board; for sealing edges of and bonding glass tape to joints of fibrous glass board; for bonding lagging cloth to thermal insulation; or Class 2 for attaching fibrous glass insulation to metal surfaces. Lagging adhesives shall be applied in strict accordance with the manufacturer's recommendations for pipe and duct insulation.

2.2.1.4 Contact Adhesive

Adhesives may be any of, but not limited to, the neoprene based, rubber based, or elastomeric type that have a maximum flame spread index of 25 and a maximum smoke developed index of 50 when tested in accordance with ASTM E84. The adhesive shall not adversely affect, initially or in service, the insulation to which it is applied, nor shall it cause any corrosive effect on metal to which it is applied. Any solvent dispersing medium or volatile component of the adhesive shall have no objectionable odor and shall not contain any benzene or carbon tetrachloride. The dried adhesive shall not emit nauseous, irritating, or toxic volatile matters or aerosols when the adhesive is heated to any temperature up to 212 degrees F. The dried adhesive shall be nonflammable and fire resistant. Flexible Elastomeric Adhesive: Comply with MIL-A-24179, Type II, Class I. Provide product listed in FM APP GUIDE.

2.2.2 Caulking

ASTM C920, Type S, Grade NS, Class 25, Use A.

2.2.3 Corner Angles

Nominal 0.016 inch aluminum 1 by 1 inch with factory applied kraft backing. Aluminum shall be ASTM B209, Alloy 3003, 3105, or 5005.

2.2.4 Fittings

Fabricated Fittings are the prefabricated fittings for flexible elastomeric pipe insulation systems in accordance with ASTM C1710. Together with the flexible elastomeric tubes, they provide complete system integrity for retarding heat gain and controlling condensation drip from chilled-water and refrigeration systems. Flexible elastomeric, fabricated fittings provide thermal protection (0.25 k) and condensation resistance (0.05 Water Vapor Transmission factor). For satisfactory performance, properly installed protective vapor retarder/barriers and vapor stops shall be used on high relative humidity and below ambient temperature applications to reduce movement of moisture through or around the insulation to the colder interior surface.

2.2.5 Finishing Cement

ASTM C450: Mineral fiber hydraulic-setting thermal insulating and finishing cement. All cements that may come in contact with Austenitic stainless steel must comply with ASTM C795.

2.2.6 Fibrous Glass Cloth and Glass Tape

Fibrous glass cloth, with 20X20 maximum mesh size, and glass tape shall have maximum flame spread index of 25 and a maximum smoke developed index of 50 when tested in accordance with ASTM E84. Tape shall be 4 inch wide rolls. Class 3 tape shall be 4.5 ounces/square yard. Elastomeric Foam Tape: Black vapor-retarder foam tape with acrylic adhesive containing an anti-microbial additive.

2.2.7 Staples

Outward clinching type monel .

2.2.8 Jackets

2.2.8.1 Aluminum Jackets

Aluminum jackets shall be corrugated, embossed or smooth sheet, 0.016 inch nominal thickness; ASTM B209, Temper H14, Temper H16, Alloy 3003, 5005, or 3105. Corrugated aluminum jacket shall not be used outdoors. Aluminum jacket securing bands shall be Type 304 stainless steel, 0.015 inch thick, 1/2 inch wide for pipe under 12 inch diameter and 3/4 inch wide for pipe over 12 inch and larger diameter. Aluminum jacket circumferential seam bands shall be 2 by 0.016 inch aluminum matching jacket material. Bands for insulation below ground shall be 3/4 by 0.020 inch thick stainless steel, or fiberglass reinforced tape. The jacket may, at the option of the Contractor, be provided with a factory fabricated Pittsburgh or "Z" type longitudinal joint. When the "Z" joint is used, the bands at the circumferential joints shall be designed by the manufacturer to seal the joints and hold the jacket in place.

2.2.8.2 Polyvinyl Chloride (PVC) Jackets

Polyvinyl chloride (PVC) jacket and fitting covers shall have high impact strength, ultraviolet (UV) resistant rating or treatment and moderate chemical resistance with minimum thickness 0.030 inch.

2.2.8.3 Vapor Barrier/Vapor Retarder

Apply the following criteria to determine which system is required.

a. On ducts, piping and equipment operating below 100 degrees F or located outside shall be equipped with a vapor barrier.

b. Ducts, pipes and equipment that are located inside and that always operate above 100 degrees F shall be installed with a vapor retarder where required as stated in paragraph VAPOR RETARDER REQUIRED.

2.2.9 Vapor Retarder Required

ASTM C921, Type I, minimum puncture resistance 50 Beach units on all surfaces except concealed ductwork, where a minimum puncture resistance of 25 Beach units is acceptable. Minimum tensile strength, 35 pounds/inch width. ASTM C921, Type II, minimum puncture resistance 25 Beach units, tensile strength minimum 20 pounds/inch width. Jackets used on insulation exposed in finished areas shall have white finish suitable for painting without sizing. Based on the application, insulation materials that require manufacturer or fabricator applied pipe insulation jackets are cellular glass, when all joints are sealed with a vapor barrier mastic, and mineral fiber. All non-metallic jackets shall have a maximum flame spread index of 25 and a maximum smoke developed index of 50 when tested in accordance with ASTM E84. Flexible elastomerics require (in addition to vapor barrier skin) vapor retarder jacketing for high relative humidity and below ambient temperature applications.

2.2.9.1 White Vapor Retarder All Service Jacket (ASJ)

ASJ is for use on hot/cold pipes, ducts, or equipment indoors or outdoors if covered by a suitable protective jacket. The product shall meet all physical property and performance requirements of ASTM C1136, Type I, except the burst strength shall be a minimum of 85 psi. ASTM D2863 Limited Oxygen Index (LOI) shall be a minimum of 31.

In addition, neither the outer exposed surface nor the inner-most surface contacting the insulation shall be paper or other moisture-sensitive material. The outer exposed surface shall be white and have an emittance of not less than 0.80. The outer exposed surface shall be paintable.

2.2.9.2 Vapor Retarder/Vapor Barrier Mastic Coatings

2.2.9.2.1 Vapor Barrier

The vapor barrier shall be self adhesive (minimum 2 mils adhesive, 3 mils embossed) greater than 3 plies standard grade, silver, white, black and embossed white jacket for use on hot/cold pipes. Permeability shall be less than 0.02 when tested in accordance with ASTM E96/E96M. Products shall meet UL 723 or ASTM E84 flame and smoke requirements and shall be UV resistant.

2.2.9.2.2 Vapor Retarder

The vapor retarder coating shall be fire and water resistant and appropriately selected for either outdoor or indoor service. Color shall be white. The water vapor permeance of the compound shall be 0.013 perms or less at 43 mils dry film thickness as determined according to procedure B of ASTM E96/E96M utilizing apparatus described in ASTM E96/E96M. The coating shall be nonflammable, fire resistant type. To resist mold/mildew, coating shall meet ASTM D5590 with 0 growth rating. Coating shall meet MIL-PRF-19565 Type II (if selected for indoor service) and be Qualified Products Database listed. All other application and service properties shall be in accordance with ASTM C647.

2.2.9.3 Laminated Film Vapor Retarder

ASTM C1136, Type I, maximum moisture vapor transmission 0.02 perms, minimum puncture resistance 50 Beach units on all surfaces except concealed ductwork; where Type II, maximum moisture vapor transmission 0.02 perms, a minimum puncture resistance of 25 Beach units is acceptable. Vapor retarder shall have a maximum flame spread index of 25 and a maximum smoke developed index of 50 when tested in accordance with ASTM E84. Flexible Elastomeric exterior foam with factory applied UV Jacket. Construction of laminate designed to provide UV resistance, high puncture, tear resistance and an excellent WVT rate.

2.2.9.4 Polyvinylidene Chloride (PVDC) Film Vapor Retarder

The PVDC film vapor retarder shall have a maximum moisture vapor transmission of 0.02 perms, minimum puncture resistance of 150 Beach units, a minimum tensile strength in any direction of 30 lb/inch when tested in accordance with ASTM D882, and a maximum flame spread index of 25 and a maximum smoke developed index of 50 when tested in accordance with ASTM E84.

2.2.9.5 Polyvinylidene Chloride Vapor Retarder Adhesive Tape

Requirements must meet the same as specified for Laminated Film Vapor Retarder above.

2.2.9.6 Vapor Barrier/Weather Barrier

The vapor barrier shall be greater than 3 ply self adhesive laminate -white vapor barrier jacket- superior performance (less than 0.0000 permeability when tested in accordance with ASTM E96/E96M). Vapor barrier shall meet UL 723 or ASTM E84 25 flame and 50 smoke requirements; and UV resistant. Minimum burst strength 185 psi in accordance with ISO 2758. Tensile strength 68 lb/inch width (PSTC-1000). Tape shall be as specified for laminated film vapor barrier above.

2.2.10 Vapor Retarder Not Required

ASTM C921, Type II, Class D, minimum puncture resistance 50 Beach units on all surfaces except ductwork, where Type IV, maximum moisture vapor transmission 0.10, a minimum puncture resistance of 25 Beach units is acceptable. Jacket shall have a maximum flame spread index of 25 and a maximum smoke developed index of 50 when tested in accordance with ASTM E84.

2.2.11 Wire

Soft annealed ASTM A580/A580M Type 302, 304 or 316 stainless steel, 16 or 18 gauge.

2.2.12 Insulation Bands

Insulation bands shall be 1/2 inch wide; 26 gauge stainless steel.

2.2.13 Sealants

Sealants shall be chosen from the butyl polymer type, the styrene-butadiene rubber type, or the butyl type of sealants. Sealants shall have a maximum permeance of 0.02 perms based on Procedure B for ASTM E96/E96M, and a maximum flame spread index of 25 and a maximum smoke developed index of 50 when tested in accordance with ASTM E84.

2.3 PIPE INSULATION SYSTEMS

Conform insulation materials to Table 1 and minimum insulation thickness as listed in Table 2 and meet or exceed the requirements of ASHRAE 90.1 - IP. Limit pipe insulation materials to those listed herein and meeting the following requirements:

2.3.1 Aboveground Cold Pipeline (-30 to 60 deg. F)

Insulation for outdoor, indoor, exposed or concealed applications, shall be as follows:

2.3.1.1 Cellular Glass

ASTM C552, Type II, and Type III. Supply the insulation from the fabricator with (paragraph WHITE VAPOR RETARDER ALL SERVICE JACKET (ASJ)) ASJ vapor retarder and installed with all longitudinal overlaps sealed and all circumferential joints ASJ taped or supply the insulation unfaced from the fabricator and install with all longitudinal and circumferential joints sealed with vapor barrier mastic.

2.3.1.2 Flexible Elastomeric Cellular Insulation

Closed-cell, foam- or expanded-rubber materials containing anti-microbial additive, complying with ASTM C534/C534M, Grade 1, Type I or II. Type I, Grade 1 for tubular materials. Type II, Grade 1, for sheet materials. Type I and II shall have vapor retarder/vapor barrier skin on one or both sides of the insulation, and require an additional exterior vapor retarder covering for high relative humidity and below ambient temperature applications.

2.3.1.3 Mineral Fiber Insulation with Integral Wicking Material (MFIWM)

ASTM C547. Install in accordance with manufacturer's instructions. Do not use in applications exposed to outdoor ambient conditions in climatic zones 1 through 4.

2.3.2 Aboveground Hot Pipeline (Above 60 deg. F)

Insulation for outdoor, indoor, exposed or concealed applications shall meet the following requirements. Supply the insulation with manufacturer's recommended factory-applied jacket/vapor barrier.

2.3.2.1 Mineral Fiber

ASTM C547, Types I, II or III, supply the insulation with manufacturer's recommended factory-applied jacket.

2.3.2.2 Calcium Silicate

ASTM C533, Type I indoor only, or outdoors above 250 degrees F pipe temperature. Supply insulation with the manufacturer's recommended factory-applied jacket/vapor barrier.

2.4 DUCT INSULATION SYSTEMS

2.4.1 Duct Insulation Jackets

2.4.1.1 All-Purpose Jacket

Provide insulation with insulation manufacturer's standard reinforced fire-retardant jacket with or without integral vapor barrier as required by the service. In exposed locations, provide jacket with a white surface suitable for field painting.

2.4.1.2 Metal Jackets

2.4.1.2.1 Aluminum Jackets

ASTM B209, Temper H14, minimum thickness of 27 gauge (0.016 inch), with factory-applied polyethylene and kraft paper moisture barrier on inside surface. Provide smooth surface jackets for jacket outside dimension 8 inches and larger. Provide corrugated surface jackets for jacket outside dimension 8 inches and larger. Provide stainless steel bands, minimum width of 1/2 inch.

2.4.1.2.2 Stainless Steel Jackets

ASTM A167 or ASTM A240/A240M; Type 304, minimum thickness of 33 gauge (0.010 inch), smooth surface with factory-applied polyethylene and kraft paper moisture barrier on inside surface. Provide stainless steel bands, minimum width of 1/2 inch.

2.4.1.3 Vapor Barrier/Weatherproofing Jacket

Vapor barrier/weatherproofing jacket shall be laminated self-adhesive (minimum 2 mils adhesive, 3 mils embossed) less than 0.0000 permeability, (greater than 3 ply, standard grade, silver, white, black and embossed or greater than 8 ply (minimum 2.9 mils adhesive), heavy duty white or natural).

2.4.2 Weatherproof Duct Insulation

Provide ASTM C552, cellular glass thermal insulation or ASTM C534/C534M Grade 1, Type II, flexible elastomeric cellular insulation, and weatherproofing as specified in manufacturer's instruction. Multi-ply, Polymeric Blend Laminate Jacketing: Construction of laminate designed to provide UV resistance, high puncture, tear resistance and an excellent WVT rate.

2.5 EQUIPMENT INSULATION SYSTEMS

Insulate equipment and accessories as specified in Tables 5 and 6. In outside locations, provide insulation 1/2 inch thicker than specified. Increase the specified insulation thickness for equipment where necessary to equal the thickness of angles or other structural members to make a smooth, exterior surface. Submit a booklet containing manufacturer's published installation instructions for the insulation systems. The instructions must be copyrighted, have an identifying or publication number, and shall have been published prior to the issuance date of this solicitation. A booklet is also required by paragraphs titled: Pipe Insulation Systems and Duct Insulation Systems.

PART 3 EXECUTION

3.1 APPLICATION - GENERAL

Insulation shall only be applied to unheated and uncooled piping and equipment. Flexible elastomeric cellular insulation shall not be compressed at joists, studs, columns, ducts, hangers, etc. The insulation shall not pull apart after a one hour period; any insulation found to pull apart after one hour, shall be replaced.

3.1.1 Installation

Except as otherwise specified, material shall be installed in accordance with the manufacturer's written instructions. Insulation materials shall not be applied until tests and heat tracing specified in other sections of this specification are completed. Material such as rust, scale, dirt and moisture shall be removed from surfaces to receive insulation. Insulation shall be kept clean and dry. Insulation shall not be removed from its shipping containers until the day it is ready to use and shall be returned to like containers or equally protected from dirt and moisture at the end of each workday. Insulation that becomes dirty shall be thoroughly cleaned prior to use. If insulation becomes wet or if cleaning does not restore the surfaces to like new condition, the insulation will be rejected, and shall be immediately removed from the jobsite. Joints shall be staggered on multi layer insulation. Mineral fiber thermal insulating cement shall be mixed with demineralized water when used on stainless steel surfaces. Insulation, jacketing and accessories shall be installed in accordance with MICA Insulation Stds plates except where modified herein or on the drawings.

3.1.2 Firestopping

Where pipes and ducts pass through fire walls, fire partitions, above grade floors, and fire rated chase walls, the penetration shall be sealed with fire stopping materials as specified in Section 07 84 00 FIRESTOPPING. The protection of ducts at point of passage through firewalls must be in accordance with NFPA 90A and/or NFPA 90B. All other penetrations, such as piping, conduit, and wiring, through firewalls must be protected with a material or system of the same hourly rating that is listed by UL, FM, or a NRTL.

3.1.3 Painting and Finishing

Painting shall be as specified in Section 09 90 00 PAINTS AND COATINGS.

3.1.4 Installation of Flexible Elastomeric Cellular Insulation

Install flexible elastomeric cellular insulation with seams and joints sealed with rubberized contact adhesive. Flexible elastomeric cellular insulation shall not be used on surfaces greater than 220 degrees F. Stagger seams when applying multiple layers of insulation. Protect insulation exposed to weather and not shown to have vapor barrier weatherproof jacketing with two coats of UV resistant finish or PVC or metal jacketing as recommended by the manufacturer after the adhesive is dry and cured.

3.1.4.1 Adhesive Application

Apply a brush coating of adhesive to both butt ends to be joined and to both slit surfaces to be sealed. Allow the adhesive to set until dry to touch but tacky under slight pressure before joining the surfaces. Insulation seals at seams and joints shall not be capable of being pulled apart one hour after application. Insulation that can be pulled apart one hour after installation shall be replaced.

3.1.4.2 Adhesive Safety Precautions

Use natural cross-ventilation, local (mechanical) pickup, and/or general area (mechanical) ventilation to prevent an accumulation of solvent vapors, keeping in mind the ventilation pattern must remove any heavier-than-air solvent vapors from lower levels of the workspaces. Gloves and spectacle-type safety glasses are recommended in accordance with safe installation practices.

3.1.5 Welding

No welding shall be done on piping, duct or equipment without written approval of the Contracting Officer. The capacitor discharge welding process may be used for securing metal fasteners to duct.

3.1.6 Pipes/Ducts/Equipment That Require Insulation

Insulation is required on all pipes, ducts, or equipment, except for omitted items as specified.

3.2 PIPE INSULATION SYSTEMS INSTALLATION

3.2.1 Pipe Insulation

3.2.1.1 General

Pipe insulation shall be installed on aboveground hot and cold pipeline systems as specified below to form a continuous thermal retarder/barrier, including straight runs, fittings and appurtenances unless specified otherwise. Installation shall be with full length units of insulation and using a single cut piece to complete a run. Cut pieces or scraps abutting each other shall not be used. Pipe insulation shall be omitted on the following:

a. Pipe used solely for fire protection.

b. Chromium plated pipe to plumbing fixtures. However, fixtures for use by the physically handicapped shall have the hot water supply and

drain, including the trap, insulated where exposed.

c. Sanitary drain lines.

d. Air chambers.

e. Adjacent insulation.

f. ASME stamps.

g. Access plates of fan housings.

h. Cleanouts or handholes.

3.2.1.2 Pipes Passing Through Walls, Roofs, and Floors

Pipe insulation shall be continuous through the sleeve.

Provide an aluminum jacket or vapor barrier/weatherproofing self adhesive jacket (minimum 2 mils adhesive, 3 mils embossed) less than 0.0000 permeability, greater than 3 ply standard grade, silver, white, black and embossed with factory applied moisture retarder over the insulation wherever penetrations require sealing.

3.2.1.2.1 Penetrate Interior Walls

The aluminum jacket or vapor barrier/weatherproofing - self adhesive jacket (minimum 2 mils adhesive, 3 mils embossed) less than 0.0000 permeability, greater than 3 plies standard grade, silver, white, black and embossed shall extend 2 inches beyond either side of the wall and shall be secured on each end with a band.

3.2.1.2.2 Penetrating Floors

Extend the aluminum jacket from a point below the backup material to a point 10 inches above the floor with one band at the floor and one not more than 1 inch from the end of the aluminum jacket.

3.2.1.2.3 Penetrating Waterproofed Floors

Extend the aluminum jacket rom below the backup material to a point 2 inches above the flashing with a band 1 inch from the end of the aluminum jacket.

3.2.1.2.4 Penetrating Exterior Walls

Continue the aluminum jacket required for pipe exposed to weather through the sleeve to a point 2 inches beyond the interior surface of the wall.

3.2.1.2.5 Penetrating Roofs

Insulate pipe as required for interior service to a point flush with the top of the flashing and sealed with flashing sealant. Tightly butt the insulation for exterior application to the top of flashing and interior insulation. Extend the exterior aluminum jacket 2 inches down beyond the end of the insulation to form a counter flashing. Seal the flashing and counter flashing underneath with metal jacketing/flashing sealant.

3.2.1.2.6 Hot Water Pipes Supplying Lavatories or Other Similar Heated Service

Terminate the insulation on the backside of the finished wall. Protect the insulation termination with two coats of vapor barrier coating with a minimum total thickness of 1/16 inch applied with glass tape embedded between coats (if applicable). Extend the coating out onto the insulation 2 inches and seal the end of the insulation. Overlap glass tape seams 1 inch. Caulk the annular space between the pipe and wall penetration with approved fire stop material. Cover the pipe and wall penetration with a properly sized (well fitting) escutcheon plate. The escutcheon plate shall overlap the wall penetration at least 3/8 inches.

3.2.1.2.7 Domestic Cold Water Pipes Supplying Lavatories or Other Similar Cooling Service

Terminate the insulation on the finished side of the wall (i.e., insulation must cover the pipe throughout the wall penetration). Protect the insulation with two coats of weather barrier mastic (breather emulsion type weatherproof mastic impermeable to water and permeable to air) with a minimum total thickness of 1/16 inch. Extend the mastic out onto the insulation 2 inches and shall seal the end of the insulation. The annular space between the outer surface of the pipe insulation and caulk the wall penetration with an approved fire stop material having vapor retarder properties. Cover the pipe and wall penetration with a properly sized (well fitting) escutcheon plate. The escutcheon plate shall overlap the wall penetration by at least 3/8 inches.

3.2.1.3 Pipes Passing Through Hangers

Insulation, whether hot or cold application, shall be continuous through hangers. All horizontal pipes 2 inches and smaller shall be supported on hangers with the addition of a Type 40 protection shield to protect the insulation in accordance with MSS SP-69. Whenever insulation shows signs of being compressed, or when the insulation or jacket shows visible signs of distortion at or near the support shield, insulation inserts as specified below for piping larger than 2 inches shall be installed, or factory insulated hangers (designed with a load bearing core) can be used.

3.2.1.3.1 Horizontal Pipes Larger Than 2 Inches and Below 60 Degrees F

Supported on hangers with the addition of a Type 40 protection shield in accordance with MSS SP-69. An insulation insert of cellular glass, prefabricated insulation pipe hangers, or perlite above 80 degrees F shall be installed above each shield. The insert shall cover not less than the bottom 180-degree arc of the pipe. Inserts shall be the same thickness as the insulation, and shall extend 2 inches on each end beyond the protection shield. When insulation inserts are required in accordance with the above, and the insulation thickness is less than 1 inch, wooden or cork dowels or blocks may be installed between the pipe and the shield to prevent the weight of the pipe from crushing the insulation, as an option to installing insulation inserts. The insulation jacket shall be continuous over the wooden dowel, wooden block, or insulation insert.

3.2.1.3.2 Vertical Pipes

Supported with either Type 8 or Type 42 riser clamps with the addition of two Type 40 protection shields in accordance with MSS SP-69 covering the 360-degree arc of the insulation. An insulation insert of cellular glass

or calcium silicate shall be installed between each shield and the pipe. The insert shall cover the 360-degree arc of the pipe. Inserts shall be the same thickness as the insulation, and shall extend 2 inches on each end beyond the protection shield. When insulation inserts are required in accordance with the above, and the insulation thickness is less than 1 inch, wooden or cork dowels or blocks may be installed between the pipe and the shield to prevent the hanger from crushing the insulation, as an option instead of installing insulation inserts. The insulation jacket shall be continuous over the wooden dowel, wooden block, or insulation insert. The vertical weight of the pipe shall be supported with hangers located in a horizontal section of the pipe. When the pipe riser is longer than 30 feet, the weight of the pipe shall be additionally supported with hangers in the vertical run of the pipe that are directly clamped to the pipe, penetrating the pipe insulation. These hangers shall be insulated and the insulation jacket sealed as indicated herein for anchors in a similar service.

3.2.1.3.3 Inserts

Covered with a jacket material of the same appearance and quality as the adjoining pipe insulation jacket, overlap the adjoining pipe jacket 1-1/2 inches, and seal as required for the pipe jacket. The jacket material used to cover inserts in flexible elastomeric cellular insulation shall conform to ASTM C1136, Type 1, and is allowed to be of a different material than the adjoining insulation material.

3.2.1.4 Flexible Elastomeric Cellular Pipe Insulation

Flexible elastomeric cellular pipe insulation shall be tubular form for pipe sizes 6 inches and less. Grade 1, Type II sheet insulation used on pipes larger than 6 inches shall not be stretched around the pipe. On pipes larger than 12 inches, the insulation shall be adhered directly to the pipe on the lower 1/3 of the pipe. Seams shall be staggered when applying multiple layers of insulation. Sweat fittings shall be insulated with miter-cut pieces the same size as on adjacent piping. Screwed fittings shall be insulated with sleeved fitting covers fabricated from miter-cut pieces and shall be overlapped and sealed to the adjacent pipe insulation. Type II requires an additional exterior vapor retarder/barrier covering for high relative humidity and below ambient temperature applications.

3.2.1.5 Pipes in high abuse areas

In high abuse areas such as janitor closets and traffic areas in equipment rooms, kitchens, and mechanical rooms, aluminum jackets shall be utilized. Pipe insulation to the 6 foot level shall be protected.

3.2.1.6 Pipe Insulation Material and Thickness

Pipe insulation materials must be as listed in Table 1 and must meet or exceed the requirements of ASHRAE 90.1 - IP.

TABLE 1

Insulation Material for Piping

Service					
	Material	Specification	Type	Class	VR/VB Req'd
Heating Hot Water Supply & Return, Heated Oil (Max 250 F)					
	Mineral Fiber	ASTM C547	I	1	No
	Calcium Silicate	ASTM C533	I		No
Cold Domestic Water Piping, Makeup Water & Drinking Fountain Drain Piping					
	Cellular Glass	ASTM C552	II	2	No
	Flexible Elastomeric Cellular	ASTM C534/C534M	I		No
Compressed Air Discharge, Steam and Condensate Return (201 to 250 Degrees F					
	Mineral Fiber	ASTM C547	I	1	No
	Calcium Silicate	ASTM C533	I		No
Medium Temperature Hot Water, Steam and Condensate (251 to 350 Degrees F)					
	Mineral Fiber	ASTM C547	I	1	No
	Calcium Silicate	ASTM C533	I		No
High Temperature Hot Water & Steam (351 to 700 Degrees F)					
	Mineral Fiber	ASTM C547	I	2	No
	Calcium Silicate	ASTM C533	I		No
Note: VR/VB = Vapor Retarder/Vapor Barrier					

TABLE 2

Piping Insulation Thickness (inch)
Do not use integral wicking material in Chilled water applications exposed to outdoor ambient conditions in climatic zones 1 through 4.

Service						
	Material	Tube And Pipe Size (inch)				
		<1	1-<1.5	1.5-<4	4-<8	> or = >8
Cold Domestic Water Piping, Makeup Water & Drinking Fountain drain Piping						
	Cellular Glass	1.5	1.5	1.5	1.5	1.5

TABLE 2						
Piping Insulation Thickness (inch) Do not use integral wicking material in Chilled water applications exposed to outdoor ambient conditions in climatic zones 1 through 4.						
Service						
	Material	Tube And Pipe Size (inch)				
		<1	1-<1.5	1.5-<4	4-<8	> or = >8
	Flexible Elastomeric Cellular	1	1	1	N/A	N/A
Compressed Air Discharge, Steam and Condensate Return (201 to 250 Degrees F						
	Mineral Fiber	1.5	1.5	2	2	2
		1.5*	2*	2.5*	3*	3.5*
	Calcium Silicate	2.5	3	4	4	4.5
Medium Temperature Hot Water, Steam and Condensate (251 to 350 Degrees F)						
	Mineral Fiber	1.5	3	3	4	4
		2.5*	*	3.5*		
	Calcium Silicate	2.5	3.5	4.5	4.5	5
High Temperature Hot Water & Steam (351 to 700 Degrees F)						
	Mineral Fiber	2.5	3	3	4	4
	Calcium Silicate	4	4.5	6	6	6

3.2.2 Aboveground Cold Pipelines

The following cold pipelines for minus 30 to plus 60 degrees F, shall be insulated in accordance with Table 2 except those piping listed in subparagraph Pipe Insulation in PART 3 as to be omitted. This includes but is not limited to the following:

a. Make-up water.

3.2.2.1 Insulation Material and Thickness

Insulation thickness for cold pipelines shall be determined using Table 2.

3.2.2.2 Factory or Field applied Jacket

Insulation shall be covered with a factory applied vapor retarder jacket/vapor barrier or field applied seal welded PVC jacket or greater than 3 ply laminated self-adhesive (minimum 2 mils adhesive, 3 mils embossed) vapor barrier/weatherproofing jacket - less than 0.0000 permeability, standard grade, sliver, white, black and embossed for use with Mineral Fiber, Cellular Glass, and Phenolic Foam Insulated Pipe. Insulation inside the building, to be protected with an aluminum jacket or greater than 3ply vapor barrier/weatherproofing self-adhesive (minimum 2 mils adhesive, 3 mils embossed) product, less than 0.0000 permeability, standard grade, Embossed Silver, White & Black, shall have the insulation and vapor retarder jacket installed as specified herein. The aluminum jacket or greater than 3ply vapor barrier/weatherproofing self-adhesive (minimum 2 mils adhesive, 3 mils embossed) product, less than 0.0000 permeability, standard grade, embossed silver, White & Black, shall be installed as specified for piping exposed to weather, except sealing of the laps of the aluminum jacket is not required. In high abuse areas such as janitor closets and traffic areas in equipment rooms, kitchens, and mechanical rooms, aluminum jackets or greater than 3ply vapor barrier/weatherproofing self-adhesive (minimum 2 mils adhesive, 3 mils embossed) product, less than 0.0000 permeability, standard grade, embossed silver, white & black, shall be provided for pipe insulation to the 6 ft level.

3.2.2.3 Installing Insulation for Straight Runs Hot and Cold Pipe

Apply insulation to the pipe with tight butt joints. Seal all butted joints and ends with joint sealant and seal with a vapor retarder coating, greater than 3 ply laminate jacket - less than 0.0000 perm adhesive tape or PVDC adhesive tape.

3.2.2.3.1 Longitudinal Laps of the Jacket Material

Overlap not less than 1-1/2 inches. Provide butt strips 3 inches wide for circumferential joints.

3.2.2.3.2 Laps and Butt Strips

Secure with adhesive and staple on 4 inch centers if not factory self-sealing. If staples are used, seal in accordance with paragraph STAPLES below. Note that staples are not required with cellular glass systems.

3.2.2.3.3 Factory Self-Sealing Lap Systems

May be used when the ambient temperature is between 40 and 120 degrees F during installation. Install the lap system in accordance with manufacturer's recommendations. Use a stapler only if specifically recommended by the manufacturer. Where gaps occur, replace the section or repair the gap by applying adhesive under the lap and then stapling.

3.2.2.3.4 Staples

Coat all staples, including those used to repair factory self-seal lap systems, with a vapor retarder coating or PVDC adhesive tape or greater than 3 ply laminate jacket - less than 0.0000 perm adhesive tape. Coat all seams, except those on factory self-seal systems, with vapor retarder coating or PVDC adhesive tape or greater than 3 ply laminate jacket - less

than 0.0000 perm adhesive tape.

3.2.2.3.5 Breaks and Punctures in the Jacket Material

Patch by wrapping a strip of jacket material around the pipe and secure it with adhesive, staple, and coat with vapor retarder coating or PVDC adhesive tape or greater than 3 ply laminate jacket - less than 0.0000 perm adhesive tape. Extend the patch not less than 1-1/2 inches past the break.

3.2.2.3.6 Penetrations Such as Thermometers

Fill the voids in the insulation and seal with vapor retarder coating or PVDC adhesive tape or greater than 3 ply laminate jacket - less than 0.0000 perm adhesive tape.

3.2.2.3.7 Flexible Elastomeric Cellular Pipe Insulation

Install by slitting the tubular sections and applying them onto the piping or tubing. Alternately, whenever possible slide un-slit sections over the open ends of piping or tubing. Secure all seams and butt joints and seal with adhesive. When using self seal products only the butt joints shall be secured with adhesive. Push insulation on the pipe, never pulled. Stretching of insulation may result in open seams and joints. Clean cut all edges. Rough or jagged edges of the insulation are not be permitted. Use proper tools such as sharp knives. Do not stretch Grade 1, Type II sheet insulation around the pipe when used on pipe larger than 6 inches. On pipes larger than 12 inches, adhere sheet insulation directly to the pipe on the lower 1/3 of the pipe.

3.2.2.4 Insulation for Fittings and Accessories

a. Pipe insulation shall be tightly butted to the insulation of the fittings and accessories. The butted joints and ends shall be sealed with joint sealant and sealed with a vapor retarder coating or PVDC adhesive tape or greater than 3 ply laminate jacket - less than 0.0000 perm adhesive tape.

b. Precut or preformed insulation shall be placed around all fittings and accessories and shall conform to MICA plates except as modified herein: 5 for anchors; 10, 11, and 13 for fittings; 14 for valves; and 17 for flanges and unions. Insulation shall be the same insulation as the pipe insulation, including same density, thickness, and thermal conductivity. Where precut/preformed is unavailable, rigid preformed pipe insulation sections may be segmented into the shape required. Insulation of the same thickness and conductivity as the adjoining pipe insulation shall be used. If nesting size insulation is used, the insulation shall be overlapped 2 inches or one pipe diameter. Elbows insulated using segments shall conform to MICA Tables 12.20 "Mitered Insulation Elbow'. Submit a booklet containing completed MICA Insulation Stds plates detailing each insulating system for each pipe, duct, or equipment insulating system, after approval of materials and prior to applying insulation.

(1) The MICA plates shall detail the materials to be installed and the specific insulation application. Submit all MICA plates required showing the entire insulating system, including plates required to show insulation penetrations, vessel bottom and top heads, legs, and skirt insulation as applicable. The MICA plates

shall present all variations of insulation systems including locations, materials, vaporproofing, jackets and insulation accessories.

(2) If the Contractor elects to submit detailed drawings instead of edited MICA Plates, the detail drawings shall be technically equivalent to the edited MICA Plate submittal.

c. Upon completion of insulation installation on flanges, unions, valves, anchors, fittings and accessories, terminations, seams, joints and insulation not protected by factory vapor retarder jackets or PVC fitting covers shall be protected with PVDC or greater than 3 ply laminate jacket - less than 0.0000 perm adhesive tape or two coats of vapor retarder coating with a minimum total thickness of 1/16 inch, applied with glass tape embedded between coats. Tape seams shall overlap 1 inch. The coating shall extend out onto the adjoining pipe insulation 2 inches. Fabricated insulation with a factory vapor retarder jacket shall be protected with either greater than 3 ply laminate jacket - less than 0.0000 perm adhesive tape, standard grade, silver, white, black and embossed or PVDC adhesive tape or two coats of vapor retarder coating with a minimum thickness of 1/16 inch and with a 2 inch wide glass tape embedded between coats. Where fitting insulation butts to pipe insulation, the joints shall be sealed with a vapor retarder coating and a 4 inch wide ASJ tape which matches the jacket of the pipe insulation.

d. Anchors attached directly to the pipe shall be insulated for a sufficient distance to prevent condensation but not less than 6 inches from the insulation surface.

e. Insulation shall be marked showing the location of unions, strainers, and check valves.

3.2.2.5 Optional PVC Fitting Covers

At the option of the Contractor, premolded, one or two piece PVC fitting covers may be used in lieu of the vapor retarder and embedded glass tape. Factory precut or premolded insulation segments shall be used under the fitting covers for elbows. Insulation segments shall be the same insulation as the pipe insulation including same density, thickness, and thermal conductivity. The covers shall be secured by PVC vapor retarder tape, adhesive, seal welding or with tacks made for securing PVC covers. Seams in the cover, and tacks and laps to adjoining pipe insulation jacket, shall be sealed with vapor retarder tape to ensure that the assembly has a continuous vapor seal.

3.2.3 Aboveground Hot Pipelines

3.2.3.1 General Requirements

All hot pipe lines above 60 degrees F, except those piping listed in subparagraph Pipe Insulation in PART 3 as to be omitted, shall be insulated in accordance with Table 2. This includes but is not limited to the following:

a. Steam.

b. Condensate & compressed air discharge.

c. Hot water heating.

Insulation shall be covered, in accordance with manufacturer's recommendations, with a factory applied Type I jacket or field applied aluminum where required or seal welded PVC.

3.2.3.2 Insulation for Fittings and Accessories

Pipe insulation shall be tightly butted to the insulation of the fittings and accessories. The butted joints and ends shall be sealed with joint sealant. Insulation shall be marked showing the location of unions, strainers, check valves and other components that would otherwise be hidden from view by the insulation.

3.2.3.2.1 Precut or Preformed

Place precut or preformed insulation around all fittings and accessories. Insulation shall be the same insulation as the pipe insulation, including same density, thickness, and thermal conductivity.

3.2.3.2.2 Rigid Preformed

Where precut/preformed is unavailable, rigid preformed pipe insulation sections may be segmented into the shape required. Insulation of the same thickness and conductivity as the adjoining pipe insulation shall be used. If nesting size insulation is used, the insulation shall be overlapped 2 inches or one pipe diameter. Elbows insulated using segments shall conform to MICA Tables 12.20 "Mitered Insulation Elbow".

3.2.4 Piping Exposed to Weather

Piping exposed to weather shall be insulated and jacketed as specified for the applicable service inside the building. After this procedure, a laminated self-adhesive (minimum 2 mils adhesive, 3 mils embossed) vapor barrier/weatherproofing jacket - less than 0.0000 permeability (greater than 3 ply, standard grade, silver, white, black and embossed aluminum jacket or PVC jacket shall be applied. PVC jacketing requires no factory-applied jacket beneath it, however an all service jacket shall be applied if factory applied jacketing is not furnished. Flexible elastomeric cellular insulation exposed to weather shall be treated in accordance with paragraph INSTALLATION OF FLEXIBLE ELASTOMERIC CELLULAR INSULATION in PART 3.

3.2.4.1 Aluminum Jacket

The jacket for hot piping may be factory applied. The jacket shall overlap not less than 2 inches at longitudinal and circumferential joints and shall be secured with bands at not more than 12 inch centers. Longitudinal joints shall be overlapped down to shed water and located at 4 or 8 o'clock positions. Joints on piping 60 degrees F and below shall be sealed with metal jacketing/flashing sealant while overlapping to prevent moisture penetration. Where jacketing on piping 60 degrees F and below abuts an un-insulated surface, joints shall be caulked to prevent moisture penetration. Joints on piping above 60 degrees F shall be sealed with a moisture retarder.

3.2.4.2 Insulation for Fittings

Flanges, unions, valves, fittings, and accessories shall be insulated and finished as specified for the applicable service. Two coats of breather emulsion type weatherproof mastic (impermeable to water, permeable to air) recommended by the insulation manufacturer shall be applied with glass tape embedded between coats. Tape overlaps shall be not less than 1 inch and the adjoining aluminum jacket not less than 2 inches. Factory preformed aluminum jackets may be used in lieu of the above. Molded PVC fitting covers shall be provided when PVC jackets are used for straight runs of pipe. PVC fitting covers shall have adhesive welded joints and shall be weatherproof laminated self-adhesive (minimum 2 mils adhesive, 3 mils embossed) vapor barrier/weatherproofing jacket - less than 0.0000 permeability, (greater than 3 ply, standard grade, silver, white, black and embossed, and UV resistant.

3.2.4.3 PVC Jacket

PVC jacket shall be ultraviolet resistant and adhesive welded weather tight with manufacturer's recommended adhesive. Installation shall include provision for thermal expansion.

3.3 DUCT INSULATION SYSTEMS INSTALLATION

Except for oven hood exhaust duct insulation, corner angles shall be installed on external corners of insulation on ductwork in exposed finished spaces before covering with jacket. Air conditioned spaces shall be defined as those spaces directly supplied with cooled conditioned air (or provided with a cooling device such as a fan-coil unit) and heated conditioned air (or provided with a heating device such as a unit heater, radiator or convector).

3.3.1 Duct Insulation Minimum Thickness

Duct insulation minimum thickness in accordance with Table 4.

Table 4 - Minimum Duct Insulation (inches)	
Cold Air Ducts	2.0
Relief Ducts	1.5
Fresh Air Intake Ducts	1.5
Warm Air Ducts	2.0
Relief Ducts	1.5
Fresh Air Intake Ducts	1.5

3.3.2 Insulation and Vapor Retarder/Vapor Barrier for Cold Air Duct

Insulation and vapor retarder/vapor barrier shall be provided for the following cold air ducts and associated equipment.

a. Combustion air intake ducts.

Insulation for rectangular ducts shall be flexible type where concealed, minimum density 3/4 pcf, and rigid type where exposed, minimum density 3 pcf. Insulation for both concealed or exposed round/oval ducts shall be flexible type, minimum density 3/4 pcf or a semi rigid board, minimum density 3 pcf, formed or fabricated to a tight fit, edges beveled and joints tightly butted and staggered. Insulation for all exposed ducts shall be provided with either a white, paint-able, factory-applied Type I jacket or a field applied vapor retarder/vapor barrier jacket coating finish as specified, the total field applied dry film thickness shall be approximately 1/16 inch. Insulation on all concealed duct shall be provided with a factory-applied Type I or II vapor retarder/vapor barrier jacket. Duct insulation shall be continuous through sleeves and prepared openings except firewall penetrations. Duct insulation terminating at fire dampers, shall be continuous over the damper collar and retaining angle of fire dampers, which are exposed to unconditioned air and which may be prone to condensate formation. Duct insulation and vapor retarder/vapor barrier shall cover the collar, neck, and any un-insulated surfaces of diffusers, registers and grills. Vapor retarder/vapor barrier materials shall be applied to form a complete unbroken vapor seal over the insulation. Sheet Metal Duct shall be sealed in accordance with Section 23 31 13.00 40 METAL DUCTS.

3.3.2.1 Installation on Concealed Duct

a. For rectangular, oval or round ducts, flexible insulation shall be attached by applying adhesive around the entire perimeter of the duct in 6 inch wide strips on 12 inch centers.

b. For rectangular and oval ducts, 24 inches and larger insulation shall be additionally secured to bottom of ducts by the use of mechanical fasteners. Fasteners shall be spaced on 16 inch centers and not more than 16 inches from duct corners.

c. For rectangular, oval and round ducts, mechanical fasteners shall be provided on sides of duct risers for all duct sizes. Fasteners shall be spaced on 16 inch centers and not more than 16 inches from duct corners.

d. Insulation shall be impaled on the mechanical fasteners (self stick pins) where used and shall be pressed thoroughly into the adhesive. Care shall be taken to ensure vapor retarder/vapor barrier jacket joints overlap 2 inches. The insulation shall not be compressed to a thickness less than that specified. Insulation shall be carried over standing seams and trapeze-type duct hangers.

e. Where mechanical fasteners are used, self-locking washers shall be installed and the pin trimmed and bent over.

f. Jacket overlaps shall be secured with staples and tape as necessary to ensure a secure seal. Staples, tape and seams shall be coated with a brush coat of vapor retarder coating or PVDC adhesive tape or greater than 3 ply laminate (minimum 2 mils adhesive, 3 mils embossed) - less than 0.0000 perm adhesive tape.

g. Breaks in the jacket material shall be covered with patches of the same material as the vapor retarder jacket. The patches shall extend

not less than 2 inches beyond the break or penetration in all directions and shall be secured with tape and staples. Staples and tape joints shall be sealed with a brush coat of vapor retarder coating or PVDC adhesive tape or greater than 3 ply laminate (minimum 2 mils adhesive, 3 mils embossed) - less than 0.0000 perm adhesive tape.

h. At jacket penetrations such as hangers, thermometers, and damper operating rods, voids in the insulation shall be filled and the penetration sealed with a brush coat of vapor retarder coating or PVDC adhesive tape greater than 3 ply laminate (minimum 2 mils adhesive, 3 mils embossed) - less than 0.0000 perm adhesive tape.

i. Insulation terminations and pin punctures shall be sealed and flashed with a reinforced vapor retarder coating finish or tape with a brush coat of vapor retarder coating.. The coating shall overlap the adjoining insulation and un-insulated surface 2 inches. Pin puncture coatings shall extend 2 inches from the puncture in all directions.

j. Where insulation standoff brackets occur, insulation shall be extended under the bracket and the jacket terminated at the bracket.

3.3.2.2 Installation on Exposed Duct Work

a. For rectangular ducts, rigid insulation shall be secured to the duct by mechanical fasteners on all four sides of the duct, spaced not more than 12 inches apart and not more than 3 inches from the edges of the insulation joints. A minimum of two rows of fasteners shall be provided for each side of duct 12 inches and larger. One row shall be provided for each side of duct less than 12 inches. Mechanical fasteners shall be as corrosion resistant as G60 coated galvanized steel, and shall indefinitely sustain a 50 lb tensile dead load test perpendicular to the duct wall.

b. Form duct insulation with minimum jacket seams. Fasten each piece of rigid insulation to the duct using mechanical fasteners. When the height of projections is less than the insulation thickness, insulation shall be brought up to standing seams, reinforcing, and other vertical projections and shall not be carried over. Vapor retarder/barrier jacket shall be continuous across seams, reinforcing, and projections. When height of projections is greater than the insulation thickness, insulation and jacket shall be carried over. Apply insulation with joints tightly butted. Neatly bevel insulation around name plates and access plates and doors.

c. Impale insulation on the fasteners; self-locking washers shall be installed and the pin trimmed and bent over.

d. Seal joints in the insulation jacket with a 4 inch wide strip of tape. Seal taped seams with a brush coat of vapor retarder coating.

e. Breaks and ribs or standing seam penetrations in the jacket material shall be covered with a patch of the same material as the jacket. Patches shall extend not less than 2 inches beyond the break or penetration and shall be secured with tape and stapled. Staples and joints shall be sealed with a brush coat of vapor retarder coating.

f. At jacket penetrations such as hangers, thermometers, and damper operating rods, the voids in the insulation shall be filled and the

penetrations sealed with a flashing sealant.

g. Insulation terminations and pin punctures shall be sealed and flashed with a reinforced vapor retarder coating finish. The coating shall overlap the adjoining insulation and un-insulated surface 2 inches. Pin puncture coatings shall extend 2 inches from the puncture in all directions.

h. Oval and round ducts, flexible type, shall be insulated with factory Type I jacket insulation with minimum density of 3/4 pcf, attached as in accordance with MICA standards.

3.3.3 Insulation for Warm Air Duct

Insulation and vapor barrier shall be provided for the following warm air ducts and associated equipment:.

a. Duct-mounted coil casings.

b. Coil-headers and return bends.

c. Coil casings.

d. Fresh air intake ducts.

Insulation for rectangular ducts shall be flexible type where concealed, and rigid type where exposed. Insulation on exposed ducts shall be provided with a white, paint-able, factory-applied Type II jacket, or finished with adhesive finish. Flexible type insulation shall be used for round ducts, with a factory-applied Type II jacket. Insulation on concealed duct shall be provided with a factory-applied Type II jacket. Adhesive finish where indicated to be used shall be accomplished by applying two coats of adhesive with a layer of glass cloth embedded between the coats. The total dry film thickness shall be approximately 1/16 inch. Duct insulation shall be continuous through sleeves and prepared openings. Duct insulation shall terminate at fire dampers and flexible connections.

3.3.3.1 Installation on Concealed Duct

a. For rectangular, oval and round ducts, insulation shall be attached by applying adhesive around the entire perimeter of the duct in 6 inch wide strips on 12 inch centers.

b. For rectangular and oval ducts 24 inches and larger, insulation shall be secured to the bottom of ducts by the use of mechanical fasteners. Fasteners shall be spaced on 18 inch centers and not more than 18 inches from duct corner.

c. For rectangular, oval and round ducts, mechanical fasteners shall be provided on sides of duct risers for all duct sizes. Fasteners shall

be spaced on 18 inch centers and not more than 18 inches from duct corners.

d. The insulation shall be impaled on the mechanical fasteners where used. The insulation shall not be compressed to a thickness less than that specified. Insulation shall be carried over standing seams and trapeze-type hangers.

e. Self-locking washers shall be installed where mechanical fasteners are used and the pin trimmed and bent over.

f. Insulation jacket shall overlap not less than 2 inches at joints and the lap shall be secured and stapled on 4 inch centers.

3.3.3.2 Installation on Exposed Duct

a. For rectangular ducts, the rigid insulation shall be secured to the duct by the use of mechanical fasteners on all four sides of the duct, spaced not more than 16 inches apart and not more than 6 inches from the edges of the insulation joints. A minimum of two rows of fasteners shall be provided for each side of duct 12 inches and larger and a minimum of one row for each side of duct less than 12 inches.

b. Duct insulation with factory-applied jacket shall be formed with minimum jacket seams, and each piece of rigid insulation shall be fastened to the duct using mechanical fasteners. When the height of projection is less than the insulation thickness, insulation shall be brought up to standing seams, reinforcing, and other vertical projections and shall not be carried over the projection. Jacket shall be continuous across seams, reinforcing, and projections. Where the height of projections is greater than the insulation thickness, insulation and jacket shall be carried over the projection.

c. Insulation shall be impaled on the fasteners; self-locking washers shall be installed and pin trimmed and bent over.

d. Joints on jacketed insulation shall be sealed with a 4 inch wide strip of tape and brushed with vapor retarder coating.

e. Breaks and penetrations in the jacket material shall be covered with a patch of the same material as the jacket. Patches shall extend not less than 2 inches beyond the break or penetration and shall be secured with adhesive and stapled.

f. Insulation terminations and pin punctures shall be sealed with tape and brushed with vapor retarder coating.

g. Oval and round ducts, flexible type, shall be insulated with factory Type I jacket insulation, minimum density of 3/4 pcf attached by staples spaced not more than 16 inches and not more than 6 inches from the degrees of joints. Joints shall be sealed in accordance with item "d." above.

3.3.4 Ducts Handling Air for Dual Purpose

For air handling ducts for dual purpose below and above 60 degrees F, ducts shall be insulated as specified for cold air duct.

3.3.5 Duct Test Holes

After duct systems have been tested, adjusted, and balanced, breaks in the insulation and jacket shall be repaired in accordance with the applicable section of this specification for the type of duct insulation to be repaired.

3.3.6 Duct Exposed to Weather

3.3.6.1 Installation

Ducts exposed to weather shall be insulated and finished as specified for the applicable service for exposed duct inside the building. After the above is accomplished, the insulation shall then be further finished as detailed in the following subparagraphs.

3.3.6.2 Round Duct

Laminated self-adhesive (minimum 2 mils adhesive, 3 mils embossed) vapor barrier/weatherproofing jacket - Less than 0.0000 permeability, (greater than 3 ply, standard grade, silver, white, black and embossed or greater than 8 ply, heavy duty, white and natural) membrane shall be applied overlapping material by 3 inches no bands or caulking needed - see manufacturer's recommended installation instructions. Aluminum jacket with factory applied moisture retarder shall be applied with the joints lapped not less than 3 inches and secured with bands located at circumferential laps and at not more than 12 inch intervals throughout. Horizontal joints shall lap down to shed water and located at 4 or 8 o'clock position. Joints shall be sealed with metal jacketing sealant to prevent moisture penetration. Where jacketing abuts an un-insulated surface, joints shall be sealed with metal jacketing sealant.

3.3.6.3 Fittings

Fittings and other irregular shapes shall be finished as specified for rectangular ducts.

3.3.6.4 Rectangular Ducts

Two coats of weather barrier mastic reinforced with fabric or mesh for outdoor application shall be applied to the entire surface. Each coat of weatherproof mastic shall be 1/16 inch minimum thickness. The exterior shall be a metal jacketing applied for mechanical abuse and weather protection, and secured with screws or vapor barrier/weatherproofing jacket less than 0.0000 permeability greater than 3 ply, standard grade, silver, white, black, and embossed or greater than 8 ply, heavy duty white and natural. Membrane shall be applied overlapping material by 3 inches. No bands or caulking needed-see manufacturing recommend installation instructions.

3.4 EQUIPMENT INSULATION SYSTEMS INSTALLATION

3.4.1 General

Removable insulation sections shall be provided to cover parts of equipment that must be opened periodically for maintenance including vessel covers, fasteners, flanges and accessories. Equipment insulation shall be omitted on the following:

a. Hand-holes.

b. Boiler manholes.

c. Cleanouts.

d. ASME stamps.

e. Manufacturer's nameplates.

f. Duct Test/Balance Test Holes.

3.4.2 Insulation for Hot Equipment

Insulation shall be furnished on equipment handling media above 60 degrees F including the following:

a. Converters.

b. Heat exchangers.

c. Hot water generators.

d. Water heaters.

e. Pumps handling media above 130 degrees F.

f. Fuel oil heaters.

g. Hot water storage tanks.

h. Air separation tanks.

i. Surge tanks.

j. Flash tanks.

k. Feed-water heaters.

l. Unjacketed boilers or parts of boilers.

m. Boiler flue gas connection from boiler to stack (if inside).

n. Induced draft fans.

o. Fly ash and soot collectors.

p. Condensate receivers.

3.4.2.1 Insulation

Insulation shall be suitable for the temperature encountered. Shell and tube-type heat exchangers shall be insulated for the temperature of the shell medium.

Insulation thickness for hot equipment shall be determined using Table 6:

TABLE 6		
Insulation Thickness for Hot Equipment (inches)		
Equipment handling steam or media at indicated pressure or temperature limit		
	Material	Thickness (inches)
15 psig or 250 degrees F		
	Rigid Mineral Fiber	2
	Flexible Mineral Fiber	2
	Calcium Silicate	4
200psig or 400 degrees F		
	Rigid Mineral Fiber	3
	Flexible Mineral Fiber	3
	Calcium Silicate	4

3.4.2.2 Insulation of Boiler Stack and Diesel Engine Exhaust Pipe

Inside boiler House , bevel insulation neatly around openings and provide sheet metal insulation stop strips around such openings. Apply a skim coat of hydraulic setting cement directly to insulation. Apply a flooding coat of adhesive over hydraulic setting cement, and while still wet, press a layer of glass cloth or tape into adhesive and seal laps and edges with adhesive. Coat glass cloth with adhesive. When dry, apply a finish coat of adhesive at can-consistency so that when dry no glass weave shall be observed. Provide metal jackets for stacks that are located above finished floor and spaces outside boiler house . Apply metal jackets directly over insulation and secure with 3/4 inch wide metal bands spaced on 18 inch centers. Do not insulate name plates. Insulation type and thickness shall be in accordance with the following Table 7.

TABLE 7						
Insulation and Thickness for Boiler Stack						
Service & Surface Temperature Range (Degrees F)						
	Material	Outside Diameter (Inches)				
		0.25 - 1.25	1 - 1.67	3.5-5	6 - 10	> or = 11 - 36
Boiler Stack (Up to 400 degrees F)						

TABLE 7						
Insulation and Thickness for Boiler Stack						
Service & Surface Temperature Range (Degrees F)						
	Material	Outside Diameter (Inches)				
		0.25 - 1.25	1 - 1.67	3.5-5	6 - 10	> or = 11 - 36
	Mineral Fiber ASTM C585 Class B-3, ASTM C547 Class 1, or ASTM C612 Class 1	N/A	N/A	3	3.5	4
	Calcium Silicate ASTM C533, Type 1	N/A	N/A	3	3.5	4

3.4.2.3 Insulation of Pumps

Insulate pumps by forming a box around the pump housing. The box shall be constructed by forming the bottom and sides using joints that do not leave raw ends of insulation exposed. Bottom and sides shall be banded to form a rigid housing that does not rest on the pump. Joints between top cover and sides shall fit tightly. The top cover shall have a joint forming a female shiplap joint on the side pieces and a male joint on the top cover, making the top cover removable. Two coats of Class I adhesive shall be applied over insulation, including removable sections, with a layer of glass cloth embedded between the coats. A parting line shall be provided between the box and the removable sections allowing the removable sections to be removed without disturbing the insulation coating. The total dry thickness of the finish shall be 1/16 inch. Caulking shall be applied to parting line of the removable sections and penetrations.

3.4.2.4 Other Equipment

a. Insulation shall be formed or fabricated to fit the equipment. To ensure a tight fit on round equipment, edges shall be beveled and joints shall be tightly butted and staggered.

b. Insulation shall be secured in place with bands or wires at intervals as recommended by the manufacturer but not greater than 12 inch centers except flexible elastomeric cellular which shall be adhered. Insulation corners shall be protected under wires and bands with suitable corner angles.

c. On high vibration equipment, cellular glass insulation shall be set in a coating of bedding compound as recommended by the manufacturer, and joints shall be sealed with bedding compound. Mineral fiber joints shall be filled with finishing cement.

d. Insulation on heads of heat exchangers shall be removable. The

removable section joint shall be fabricated using a male-female shiplap type joint. Entire surface of the removable section shall be finished as specified.

e. Exposed insulation corners shall be protected with corner angles.

f. On equipment with ribs, such as boiler flue gas connection, draft fans, and fly ash or soot collectors, insulation shall be applied over 6 by 6 inch by 12 gauge welded wire fabric which has been cinched in place, or if approved by the Contracting Officer, spot welded to the equipment over the ribs. Insulation shall be secured to the fabric with J-hooks and 2 by 2 inch washers or shall be securely banded or wired in place on 12 inch (maximum) centers.

g. On equipment handling media above 600 degrees F, insulation shall be applied in two or more layers with joints staggered.

h. Upon completion of installation of insulation, penetrations shall be caulked. Two coats of adhesive shall be applied over insulation, including removable sections, with a layer of glass cloth embedded between the coats. The total dry thickness of the finish shall be 1/16 inch. Caulking shall be applied to parting line between equipment and removable section insulation.

3.4.3 Equipment Handling Dual Temperature Media

Below and above 60 degrees F: equipment handling dual temperature media shall be insulated as specified for cold equipment.

3.4.4 Equipment Exposed to Weather

3.4.4.1 Installation

Equipment exposed to weather shall be insulated and finished in accordance with the requirements for ducts exposed to weather in paragraph DUCT INSULATION INSTALLATION.

3.4.4.2 Optional Panels

At the option of the Contractor, prefabricated metal insulation panels may be used in lieu of the insulation and finish previously specified. Thermal performance shall be equal to or better than that specified for field applied insulation. Panels shall be the standard catalog product of a manufacturer of metal insulation panels. Fastenings, flashing, and support system shall conform to published recommendations of the manufacturer for weatherproof installation and shall prevent moisture from entering the insulation. Panels shall be designed to accommodate thermal expansion and to support a 250 pound walking load without permanent deformation or permanent damage to the insulation. Exterior metal cover sheet shall be aluminum and exposed fastenings shall be stainless steel or aluminum.

-- End of Section --

SECTION 23 08 00.00 22

COMMISSIONING OF HVAC SYSTEMS
08/16

PART 1 GENERAL

1.1 REFERENCES

The publications listed below form a part of this specification to the extent referenced. The publications are referred to within the text by the basic designation only.

ASSOCIATED AIR BALANCE COUNCIL (AABC)

ACG Commissioning Guideline	(2005) Commissioning Guideline

NATIONAL ENVIRONMENTAL BALANCING BUREAU (NEBB)

NEBB Commissioning Standard	(2009) Procedural Standards for Whole Building Systems Commissioning of New Construction; 3rd Edition

1.2 SUMMARY

The requirements of this section apply to all sections of Division 23. Refer to Division 1 Section 01 91 13.00 22 GENERAL COMMISSIONING REQUIREMENTS FOR CONSTRUCTION for general commissioning requirements applicable to the entire project.

This Section includes Commissioning process requirements for HVAC&R systems, assemblies, components and equipment to ensure that the work has been completed as specified and that systems are functioning in the manner as described herein, and as specified in the system operating criteria for this project.

a. Commissioning will commence according to the approved construction schedule, after the completion of the HVAC test, balance and adjust (TAB) report, and after the preliminary inspection punchlist items and commissioning deficiencies are completed by the Contractor and his subcontractors.

b. Construction phase commissioning process shall include the following:

1. Step One: Installation Verification

2. Step Two: System Startup

3. Step Three: Functional Performance Testing

The HVAC commissioning process includes the following tasks:

a. Testing and startup of HVAC equipment and systems.

b. HVAC equipment and system verification checks.

c. Assistance in functional performance testing to verify testing and balancing, and equipment and system performance.

d. Provide qualified personnel to assist in commissioning tests, including seasonal testing.

e. Complete and endorse construction phase checklists provided by Commissioning Authority (CxA) to assure equipment and systems are fully operational and ready for functional performance testing.

f. Provide equipment, materials, and labor necessary to correct deficiencies found during commissioning process and to fulfill contract and warranty requirements.

g. Provide operation and maintenance information and record drawings to Commissioning Authority for review verification and organization, prior to distribution.

h. Provide assistance to CxA to develop, edit, and document system operation descriptions.

i. Provide training for systems specified in this Section, coordinated with the CxA.

The commissioning process will also be used to develop test protocol and record the associated test data in an effort to advance the building HVAC systems from a state of substantial completion to a full dynamic operation.

The commissioning process is also intended to assist the Government's operating and maintenance staff in the training and familiarization with new HVAC systems and equipment. The Commissioning Plan and final Commissioning Report should also serve as tools to reduce post-occupancy critical systems operational difficulty or failure. Operational staff training is essential to the commission process and will run concurrently with Steps One through Three referenced above.

The commissioning required by this section is intended to supplement the inspection, testing, and training requirements contained in the technical sections and to consolidate the reports required by those sections. Duplication of the inspection, testing and training required by the technical sections is not required. This section does include additional commissioning requirements.

1.3 DEFINITIONS

Refer to Division 1 Section 01 91 13.00 22 GENERAL COMMISSIONING REQUIREMENTS FOR CONSTRUCTION, Article "Definitions" for definintions applicable to this section.

1.4 COMMISSIONING SUBMITTAL REQUIREMENTS

Commissioning Authority (CxA) shall prepare Commissioning Plan, Prefunctional Checklists, Functional Performance Test (FPT) procedures, narrative descriptions of the design intent for each of the systems identified, and the Commissioning Report, and execute and document results.

a. Contractor shall provide CxA with documentation required for Commissioning Work. At minimum, documentation shall include: detailed start-up procedures, full sequences of operation, Operating and Maintenance data and performance data, control drawings, and details of Government-contracted tests.

b. Contractor shall submit to CxA the manufacturers' installation and checkout materials actually shipped inside equipment and actual field checkout sheet forms used by factory or field technicians.

c. Contractor shall review and approve other relative documentation for impact on FPT's of the systems:

1. Verify manufacturer's installation instructions are followed by completing the prefunctional checklists for all HVAC equipment.

2. Draft Test, Adjust and Balance (TAB) Reports: Review and provide comments to Government.

3. Factory Performance Test Reports: Review and compile all factory performance data to assure that the data is complete prior to executing the FPT's.

4. Completed equipment Start-up certification forms along with the manufacturer's field or factory performance and Start-up test documentation: Subcontractor performing the test will review the documentation prior to commencing with the scheduled FPT's. Government may require that system one-line diagrams and applicable Specification Section(s) be attached to the FPT documentation.

5. Final TAB Reports: Subcontractor performing the test will review the documentation prior to commencing with the scheduled FPT's.

6. Operating and Maintenance (O&M) information per requirements of the Technical Specifications and Division 01 requirements: To validate adequacy and completeness of the FPT, the Contractor shall ensure that the O&M manual content, marked-up record Drawings and Specifications, component submittal drawings, and other pertinent documents are available at the Project Site for review.

1.5 SYSTEMS TO BE COMMISSIONED

The following systems shall be commissioned as part of this project:

a. Air Handling Systems: Fans, motors, variable speed drives, cooling coils and control valves, heating coils and control valves, filters, dampers, safeties such as smoke detectors or freezestats and damper end switches, controls, gages, and vibration isolation.

b. Dehumidification Systems, piping systems, pumps, ductwork systems, packaged DX roof top equipment, split-system DX air conditioning equipment and heat pumps, self-contained air conditioning units, fan-coil units, heat exchangers, computer room air conditioning (CRAC) units, constant and variable volume air terminals, fire dampers and smoke dampers, indoor air quality, equipment sound control (if noted), equipment vibration control (if noted), DDC controls, and test, adjust and balance (TAB) work.

c. Energy Recovery Devices: Enthalpy wheels, fans, motors, variable speed drives, cooling coils and control valves, heating coils and control valves, filters, dampers, safeties, controls, gages, and vibration isolation.

d. Heating Hot Water Generation and Distribution Systems: Boilers, controls, instrumentation and gages, flues, heating water pumps and motors, variable speed drives, mixing valves.

e. Steam Generation and Distribution Systems: Steam boilers, boiler feed-water treatment, boiler feed-water pumps, combustion burners/fans/motors, fuel delivery storage tanks/filters/pumps/motors, flues steam reducing stations, steam condensate receivers steam condensate transfer pumps, de-aerators, safety relief valves, motors, controls, pump alternator, alarms, and instrumentation, motors, and safeties.

f. Chilled Water Generation and Distribution Systems: Chilled water pumps and motors, variable speed drives, chiller motor/compressor, controls, instrumentation and safeties, isolation valves, blending valves, side stream water cleaners/scrubbers/filters.

g. Condenser Water Systems: Condenser water pumps and motors, Variable Speed Drives, cooling tower fans, cooling tower sump level controls, open-circuit water treatment system, water treatment injection pumps and motors, water treatment controls, cooling tower basin heaters and controls, side stream water cleaners/scrubbers/filters, tower bypass valves.

h. Ground Loop Water Systems: Ground loop water pumps, motors, variable speed drives; closed-circuit fluid coolers, fans and motors; open-circuit cooling towers; heat exchangers and control valves; closed-circuit water treatment systems, pumps, motors & controls.

i. Exhaust Fans: Fan, motor, variable speed drives, controls and safeties.

j. Direct Digital Control Systems (DDC), Building Automation Systems (BAS), Energy Control and Management Systems (EMCS), Utility Management and Control Systems (UMCS): BACnet or similar Local Area Network (LAN), Operator Work Station hardware/software, building controller hardware/software, terminal unit controller hardware/software, all sequences of operation, system accuracy and response time, point-to-point verification.

k. Laboratory Exhaust Systems: Fume hoods, pressure controls, system alarms, fans, motors, and variable speed drives.

l. Laboratory Ventilation Systems: Supply air terminal units and controls, pressure controls and alarms, fans, motors, and variable speed drives.

m. Computer Room HVAC Systems: In-rack cooling systems or CRAC units including fans, motors, variable speed drives, cooling coils and control valves, heating coils and control valves, humidifiers, compressors and liquid-cooled condensers, filters, safeties, controls, gages, vibration isolation, condensate pumps, water/leak detection system and alarms, and shunt trip shut down.

n. Room/Building Pressurization Systems: Pressure sensors, terminal units/dampers, and controls and alarms.

o. HVAC Water Treatment Systems: Closed Circuits - including shot feeders and final water analysis; Open Circuits - including water analysis,

chemical/biocide tanks, injection piping, chemical/biocide pumps and motors, controls, water meter, and automatic blowdown.

p. Commercial Kitchen Hoods & Associated Fire Suppression Systems: Fans, motors, variable speed drives, automatic shut down on fire suppression discharge, and gas valve operation.

q. Fuel Delivery and Storage Systems for Boilers and Standby Generators: Fuel level monitoring/controls/alarms, transfer pumps and motors, leak detection monitoring/alarms, and fill systems; fuel filtration and polishing systems, pumps, motors and equipment.

1.6 COMMISSIONING RESPONSIBILITIES

1.6.1 HVAC Equipment/System Installer Commissioning Responsibilities

a. Attend commissioning meetings.

b. Ensure temperature controls installer performs assigned commissioning responsibilities as specified herein.

c. Ensure testing, adjusting, and balancing agency performs assigned commissioning responsibilities as specified herein.

d. Provide instructions and demonstrations for Government personnel.

e. Ensure subcontractors perform assigned commissioning responsibilities.

f. Ensure participation of equipment manufacturers in appropriate startup, testing, and training activities when required by individual equipment specifications and/or the commissioning plan.

g. Develop startup and initial checkout plan using manufacturer's startup procedures and prefunctional (construction) checklists for equipment and systems to be commissioned.

h. During verification check and startup process, execute HVAC related portions of checklists for equipment and systems to be commissioned.

i. Perform and document completed installation checklists, startup checklists and reports. and system operational checkout procedures, providing copy to CxA.

j. Where specified in the technical sections, provide manufacturer's representatives to execute starting of equipment. Ensure representatives are available and present during agreed upon schedules and are in attendance for duration to complete tests, adjustments and problem-solving.

k. Coordinate with equipment manufacturers to determine specific requirements to maintain validity of warranties.

l. Provide personnel to assist CxA during equipment or system verification checks and functional performance tests.

m. Prior to functional performance tests, review test procedures to ensure feasibility, safety and equipment protection and provide necessary written alarm limits to be used during tests.

n. Prior to startup, inspect, check, and verify correct and complete installation of equipment and system components for verification checks included in commissioning plan. When deficient or incomplete work is discovered, ensure corrective action is taken and re-check until equipment or system is ready for startup.

o. Provide factory supervised startup services for equipment and systems where specified. Coordinate work with manufacturer and CxA.

p. Perform verification checks and startup on equipment and systems as specified.

q. Assist CxA in performing functional performance tests on equipment and systems as specified.

r. Perform operation and maintenance training sessions scheduled by Contractor in accordance with the commissioning plan.

s. Conduct HVAC system orientation and inspection.

1.6.2 HVAC Temperature Controls Installer Commissioning Responsibilities:

a. Attend commissioning meetings.

b. Review design for ability of systems to be controlled including the following:

1. Confirm proper hardware requirements exists to perform functional performance testing.

2. Confirm proper safeties and interlocks are included in design.

3. Confirm proper sizing of system control valves and actuators and control valve operation will result capacity control identified in Contract Documents.

4. Confirm proper sizing of system control dampers and actuators and damper operation will result in proper damper positioning.

5. Confirm sensors selected are within device ranges.

6. Review sequences of operation and obtain clarification from Architect/Engineer.

7. Indicate delineation of control between packaged controls and building automation system (BAS), listing BAS monitor points and BAS adjustable control points.

8. Provide written sequences of operation for packaged controlled equipment. Equipment manufacturers' stock sequences may be included, when accompanied by additional narrative to reflect Project conditions.

c. Inspect, check, and confirm proper operation and performance of control hardware and software provided in other HVAC sections.

d. Submit proposed procedures for performing automatic temperature control system point-to-point checks to CxA and Architect/Engineer.

e. Inspect check and confirm correct installation and operation of automatic temperature control system input and output device operation through point-to-point checks.

f. Perform training sessions to instruct Government's operations and maintenance personnel in hardware operation, software operation, programming, and application in accordance with commissioning plan.

g. Demonstrate system performance and operation to CxA during functional performance tests including each mode of operation.

h. Provide control system technician to assist during CxA verification check and functional performance testing.

i. Provide control system technician to assist testing, adjusting, and balancing agency during performance of testing, adjusting, and balancing work.

j. Assist in performing operation and maintenance training sessions scheduled by the Contractor.

1.6.3 Testing, Adjusting, and Balancing (TAB) Agency Commissioning Responsibilities:

a. Attend commissioning meetings.

b. Participate in verification of testing, adjusting, and balancing report for verification or diagnostic purposes. Repeat sample (percent) of measurements contained in testing, adjusting, and balancing report as indicated in commissioning plan.

c. Assist in performing operation and maintenance training sessions scheduled by the Contractor.

1.7 SEQUENCING AND SCHEDULING

Begin the work described in this Section only after all work required in related Sections has been successfully completed, and all test and inspection reports and operation and maintenance manuals required in these Sections have been submitted and approved. Pre-Functional (Construction) Checklists shall be performed for the installation of mechanical equipment, at appropriate times during the construction phase of the Contract.

PART 2 PRODUCTS

2.1 GENERAL

All materials shall meet or exceed all applicable referenced standards, federal, state and local requirements, and conform to codes and ordinances of authorities having jurisdiction.

2.2 TEST EQUIPMENT

Provide all specialized tools, test equipment and instruments required to execute Start-up, checkout, and testing of equipment.

All specialized tools, test equipment, and instruments required to execute Start-up, checkout, and testing of equipment shall be of sufficient

quality and accuracy to test and/or measure system performance within specified tolerances. A testing laboratory must have calibrated test equipment within the previous twelve (12) months. Calibration shall be NIST traceable, and shall be in accordance with the requirements of the NEBB Commissioning Standard or the ACG Commissioning Guideline. Contractor must calibrate test equipment and instruments according to manufacturer's recommended intervals and whenever the test equipment is dropped or damaged. Calibration tags must be affixed to the test equipment or certificates readily available.

PART 3 EXECUTION

3.1 GENERAL

The Contractor and his Subcontractors shall be responsible for performing procedures presented in the specifications, and as indicated on the contract drawings and as detailed in the Functional Performance Tests (FPT) procedures. Members of the designated Commissioning Team shall witness various portions of the commissioning process. Responsibilities for these activities are listed in the following paragraphs. Commissioning Team members shall sign-off on appropriate sections after verifying installation, operation, or documentation. Final sign-off shall be by the Government and the Commissioning Authority (CxA).

Any test ports, gauges, test equipment, etc., needed to accomplish the functional performance tests shall be provided by the Contractor and his Subcontractors.

The Contractor shall provide to the Commissioning Team documentation of calibration of controls. Documentation shall include dates, setpoints, calibration coefficients, control loop verification, and other data required to verify system check-out. Documentation shall be dated and initialed by field engineer or technician performing the work.

3.2 COMMISSIONING PLAN

The commissioning plan will be developed by the third party CxA and submitted to the Government for approval. The approved commissioning plan outlines the organization, scheduling, team members, and documentation pertaining to the overall commissioning process.

3.3 CONSTRUCTION CHECKLIST

A checklist shall be developed by the CxA for each component of commissioned equipment and systems to ensure that the specified equipment has been provided, is properly installed, and has been initially started and checked out adequately in preparation for full operation and functional testing (e.g., belt tension, fluids topped, labels affixed, gages in place, sensors calibrated, voltage balanced, rotation correct, etc.).

The CxA for this project shall develop 'Prefunctional (Construction) Checklists' for this project, which shall be reviewed and approved by the Government; and then provided to, and completed by the Contractor and his sub-contractors (HVAC, Controls, TAB, etc.) to ensure that all equipment and systems are installed properly; have been started up preliminarily, and are reading for commissioning and performance verification testing.

3.4 FUNCTIONAL PERFORMANCE TEST (FPT) PROCEDURES

The FPT procedures at a minimum shall consist of the following sections:

a. Narrative Description: Provide a narrative description of the design intent of each of the HVAC systems to be tested, their intended modes and sequences of operation.

b. Testing Prerequisites: Provide verification and documentation that primary mechanical, electrical, and controls systems that support or interact with the system that the FPT has been prepared for are completed, tested and operational.

c. Installation Verification: Provide verification that the system installation is completed and is ready for commissioning.

d. Commencement of Functional Performance Testing: Record the date and time of the start of system commissioning.

e. System Condition Prior to Starting Performance Testing: Record the current set points and parameters of the system at the start of commissioning.

f. Functional Performance Test: This section shall provide the following:

    1. Sequential steps required to set parameters and conditions required to test components and functions throughout intended ranges of operation.

    2. Full range of checks and tests carried out to determine if electric and pneumatic connections, components, subsystems, systems and interfaces between systems function in accordance with the contract documents and design intents.

    3. All modes and sequences of control operations, interlocks and conditional control responses and specified responses to abnormal emergency conditions.

g. End of Functional Performance Test: Record the date and time of the completion of system commissioning.

h. Field Notes: Provide a copy of the notes and remarks made and documented during system commissioning. Include these items in the final commissioning report.

i. List systems modifications, not required by the Contract Documents, but provided by the Subcontractor. List other questions regarding such system modifications.

j. List problems discovered during Commissioning that were corrected.

k. List problems discovered during Commissioning that were not corrected.

l. List recommended party that should take action on these 'uncorrected' problems.

The CxA for this project shall develop 'Functional Performance Test' (FPT) procedures for this project, which shall be reviewed and approved by the Government; and then provided to, and completed by the Contractor and his

sub-contractors (HVAC, Controls, TAB, etc.), under the supervision of the CxA, to ensure that all equipment and systems are installed properly; have been started up preliminarily, and are reading for commissioning and performance verification testing.

3.5 OPERATIONAL AND MAINTENANCE STAFF TRAINING

System narrative descriptions will be prepared by the CxA and supported by flow diagrams, one line diagrams, and appropriate specification sections for major systems to be commissioned. The CxA will coordinate "system description" meetings with members of facility management and maintenance department groups to review system description documentation. The meetings will provide an overview of major system features, components, and arrangements.

The Contractor, his sub-contractors and associated manufacturer's representatives shall provide the required training to the Government's operational staff after the system description meetings have occurred. These Contractor training sessions for Government personnel shall provide a more detailed analogy of systems operation and maintenance.

3.6 DOCUMENTATION

The Contractor and his installing subcontractors shall be responsible for collection of pertinent data during system installation, inspection and checkout; during system start-up; and during functional performance testing. The Contractor and his subcontractors shall submit to the CxA documentation of all construction inspections, startup procedures and results, as well as any tests performed prior to and after system start-up. Documentation shall also include the equipment manufacturer's start-up procedures as reviewed and approved by Commissioning Team, including startup reports for equipment and systems conducted by a factory-certified technician or engineer, as specified in the Division 23 Sections for this project.

Provide a title sheet for each section and list the following:

a. Section Title and Specification Section Name and Number requiring this submittal.

b. Project name, project number, and address.

c. Contractor and subcontractor names, addresses, and phone numbers.

d. Name, title, signature, and date of person making the submittal.

e. Table of Contents for each Section.

f. Name of Command, a blank line for signature, and the name and title of person accepting the submittal, and the date accepted by signature.

g. Name, address, and phone number of CxA. Include a blank line for signature; and date of person accepting the submittal.

Provide a Table of Contents for multiple submittals. List each submittal and page number. Number each page, centered on the bottom in sequential numerical order.

3.6.1 STEP ONE - INSTALLATION VERIFICATION

General Commissioning Responsibilities:

a. Before system start-up begins, the Commissioning Team shall conduct a final installation verification audit. The Contractor and his subcontractors shall be responsible for completion of work including change orders and punch list items to the Government's satisfaction. The audit shall include, but not be limited to, checking of:

    1. Piping specialties including balance, control, and isolation valves.

    2. Ductwork specialty items including turning devices, balance, fire, smoke, control dampers, and access doors.

    3. Control sensor types and location.

    4. Identification of piping, valves, equipment, controls, etc.

    5. Major equipment, pumps, valves, starters, gauges, thermometers, etc.

    6. Documentation of prestart-up tests performed, including manufacturer's factory tests.

b. If work is found to be incomplete, incorrect, or non-functional, the Contractor and his subcontractors shall correct the deficiencies before system start-up work proceeds.

3.6.2 STEP TWO - SYSTEM START-UP

General Commissioning Responsibilities: A start-up plan shall be developed and submitted to the Government by the Contractor and his installing subcontractors, for approval. Start-up plan shall include the following:

a. Flushing and cleaning of pipe. Cleaning of interior of ductwork and air handling units.

b. Check and replace filters, strainers, and screens, as required.

c. Review control valve/damper min-max, and operating positions.

d. Electrical startup procedures and tests for equipment.

e. Completion of required pressure tests for piping and ductwork.

f. Verification of completion of equipment operating controls, including safeties and interlocks.

g. Verify that chemical treatment systems are as specified, and are operational.

h. Verify that copies of manufacturer's factory tests are available. Verify that manufacturer's startup tests and reports are complete and that all recommendations by the startup engineer have been addressed and completed.

The start-up plan will be reviewed and approved by the Government. After approval is complete, a prestart-up inspection shall be performed by the CxA, and by designated members of the Commissioning Team. The Contractor and his installing subcontractors shall commence with system start-up after approval has been given to start-up plan and the prestart-up inspection is completed.

a. Designated members of the Commissioning Team shall witness system start-ups and list system and equipment deficiencies noted during start-up. The Contractor and his subcontractors shall take corrective action on system deficiencies noted and shall demonstrate satisfactory and suitable system operation to the CxA and to the Commissioning Team.

b. Designated systems requiring test and balance work shall have this activity commence after systems have successfully completed start-up. System and equipment deficiencies observed during this activity shall be noted and corrected.

3.6.3 STEP THREE - FUNCTIONAL PERFORMANCE TESTING

General Commissioning Responsibilities:

a. Functional Performance Testing begins after operational testing, adjusting, and balancing of the systems have been completed by the Contractor and his subcontractors. Ideally, the Commissioning training for Government operators and maintenance personnel, including the description of the systems, as well as the hands-on training sessions will also have been completed.

b. The objective of the Functional Performance Testing is to advance the building systems from a state of substantial completion to full dynamic operation in accordance with the specified design requirements and design intent.

c. To attain this objective the CxA will develop individual systems testing protocols which, when implemented by the Contractor/subcontractors will allow the Commissioning Team to observe, evaluate, identify deficiencies, recommend modifications, tune, and document the systems and systems equipment performance over a range of load and functional levels.

d. Functional Performance tests for the systems to be commissioned will be defined in the Commissioning Plan. These tests are intended to be conclusive but may require minor modifications as system operation dictates.

-- End of Section --

SECTION 23 09 13

INSTRUMENTATION AND CONTROL DEVICES FOR HVAC
11/15

PART 1 GENERAL

1.1 SUMMARY

This section provides for the instrumentation control system components excluding direct digital controllers, network controllers, gateways etc. that are necessary for a completely functional automatic control system. When combined with a Direct Digital Control (DDC) system, the Instrumentation and Control Devices covered under this section must be a complete system suitable for the control of the four steam boilers in Building 154 and other building-level systems as specified and indicated.

a. Install hardware to perform the control sequences as specified and indicated and to provide control of the equipment as specified and indicated.

b. Install hardware such that individual control equipment can be replaced by similar control equipment from other equipment manufacturers with no loss of system functionality.

c. Install and configure hardware such that the Government or their agents are able to perform repair, replacement, and upgrades of individual hardware without further interaction with the installing Contractor.

1.1.1 Verification of Dimensions

After becoming familiar with all details of the work, verify all dimensions in the field, and advise the Contracting Officer of any discrepancy before performing any work.

1.1.2 Drawings

The Government will not indicate all offsets, fittings, and accessories that may be required on the drawings. Carefully investigate the mechanical, electrical, and finish conditions that could affect the work to be performed, arrange such work accordingly, and provide all work necessary to meet such conditions.

1.2 REFERENCES

The publications listed below form a part of this specification to the extent referenced. The publications are referred to within the text by the basic designation only.

ASME INTERNATIONAL (ASME)

ASME B40.100	(2013) Pressure Gauges and Gauge Attachments

ASTM INTERNATIONAL (ASTM)

ASTM A269/A269M	(2015a) Standard Specification for

	Seamless and Welded Austenitic Stainless Steel Tubing for General Service

INSTITUTE OF ELECTRICAL AND ELECTRONICS ENGINEERS (IEEE)

IEEE 142	(2007; Errata 2014) Recommended Practice for Grounding of Industrial and Commercial Power Systems - IEEE Green Book

NATIONAL FIRE PROTECTION ASSOCIATION (NFPA)

NFPA 70	(2014; AMD 1 2013; Errata 1 2013; AMD 2 2013; Errata 2 2013; AMD 3 2014; Errata 3-4 2014; AMD 4-6 2014) National Electrical Code
NFPA 90A	(2015) Standard for the Installation of Air Conditioning and Ventilating Systems

UNDERWRITERS LABORATORIES (UL)

UL 61010-1	Safety Requirements for Electrical Equipment for Measurement, Control, and Laboratory Use - Part 1: General Requirements
UL 5085-3	(2006; Reprint Nov 20121) Low Voltage Transformers - Part 3: Class 2 and Class 3 Transformers

1.3 SUBMITTALS

Government approval is required for submittals with a "G" designation; submittals not having a "G" designation are for Contractor Quality Control approval. Submit the following in accordance with Section 01 33 00 SUBMITTAL PROCEDURES:

SD-03 Product Data

Equipment; G
Weathershields; G
Tubing; G
Wire And Cable; G
Sensors And Instrumentation; G
Indicating Devices; G
Output Devices; G
User Input Devices; G

SD-07 Certificates

Equipment; G
Sensors And Instrumentation; G
Indicating Devices; G
Output Devices; G
User Input Devices; G

1.4 DELIVERY AND STORAGE

Store and protect products from the weather, humidity, and temperature variations, dirt and dust, and other contaminants, within the storage condition limits published by the equipment manufacturer.

1.5 INPUT MEASUREMENT ACCURACY

Select, install and configure sensors, transmitters and DDC Hardware such that the maximum error of the measured value at the input of the DDC hardware is less than the maximum allowable error specified for the sensor or instrumentation.

1.6 SUBCONTRACTOR SPECIAL REQUIREMENTS

Perform all work in this section in accordance with the paragraph entitled CONTRACTOR SPECIAL REQUIREMENTS in Section 01 30 00 ADMINISTRATIVE REQUIREMENTS.

PART 2 PRODUCTS

2.1 EQUIPMENT

2.1.1 General Requirements

All products used to meet this specification must meet the indicated requirements, but not all products specified here will be required by every project. All products must meet the requirements of this Section.

2.1.2 Operation Environment Requirements

Unless otherwise specified, provide products rated for continuous operation under the following conditions:

2.1.2.1 Pressure

Pressure conditions normally encountered in the installed location.

2.1.2.2 Vibration

Vibration conditions normally encountered in industrial processes.

2.1.2.3 Temperature

a. Products installed indoors: Ambient temperatures in the range of 32 to 150 degrees F and temperature conditions outside this range normally encountered at the installed location.

b. Products installed outdoors or in unconditioned indoor spaces: Ambient temperatures in the range of -35 to +151 degrees F and temperature conditions outside this range normally encountered at the installed location.

2.1.2.4 Humidity

10 to 95 percent relative humidity, noncondensing and also humidity conditions outside this range normally encountered at the installed location.

2.2 WEATHERSHIELDS

Provide weathershields constructed of galvanized steel painted white, unpainted aluminum, aluminum painted white, or white PVC.

2.3 TUBING

2.3.1 Stainless Steel

For stainless steel tubing, provide tubing Type 304/316 conforming to ASTM A269/A269M with minimum wall thickness of 0.030 inch and with minimum diameter of 3/8-inch. Fittings shall be swage-type compression fittings to match tubing chemistry. Use flexible hoses with stainless overbraid for all vibrating or moving equipment and shall be no longer than 18 inches.

2.3.2 Plastic

Do not use plastic tubing.

2.4 WIRE AND CABLE

Provide wire and cable meeting the requirements of NFPA 70 and NFPA 90A in addition to the requirements of this specification and referenced specifications.

2.4.1 Terminal Blocks

For terminal blocks which are not integral to other equipment, provide terminal blocks which are insulated, modular, feed-through, clamp style with recessed captive screw-type clamping mechanism, suitable for DIN rail mounting, and which have enclosed sides or end plates and partition plates for separation.

2.4.2 Control Wiring for Binary Signals

For Control Wiring for Binary Signals, provide 18 AWG stranded copper or thicker wire rated for 300-volt service.

2.4.3 Control Wiring for Analog Signals

For Control Wiring for Analog Signals, provide 18 AWG or thicker, stranded copper, single- or multiple-twisted wire meeting the following requirements:

a. minimum 2 inch lay of twist

b. 100 percent shielded pairs

c. at least 300-volt insulation

d. each pair has a 20 AWG tinned-copper drain wire and individual overall pair insulation

e. cables have an overall aluminum-polyester or tinned-copper cable-shield tape, overall 20 AWG tinned-copper cable drain wire, and overall cable insulation.

2.4.4 Power Wiring for Control Devices

For 24-volt circuits, provide insulated stranded copper 18 AWG or thicker wire rated for 300 VAC service. For 120-volt circuits, provide 14 AWG or thicker stranded copper wire rated for 600-volt service.

2.4.5 Transformers

Provide UL 5085-3 approved transformers. Select transformers sized so that the connected load is no greater than 80 percent of the transformer rated capacity.

2.5 SENSORS AND INSTRUMENTATION

Unless otherwise specified, provide sensors and instrumentation which incorporate an integral transmitter. Sensors and instrumentation, including their transmitters, must meet the specified accuracy and drift requirements at the input of the connected DDC Hardware's analog-to-digital conversion.

2.5.1 Transmitters

Unless indicated otherwise, each sensor shall be provided with a transmitter, selected to match the sensor. Except where specifically indicated otherwise on the drawings, the transmitter shall be provided with a four digit or analog visual display of the measured parameter and shall provide a 4 to 20 mAdc output signal proportional to the level of the measured parameter. Accuracy for transmitters shall be plus or minus 0.1 percent for span. Transmitter shall be mounted integrally with the sensor or mounted remotely. Provide mounting brackets if mounted remotely. Field preamplifiers and signal conditioners shall be included when necessary to maintain the accuracy from sensor to the programmable logic controller or recorder. The electronics housing shall be aluminum or stainless steel. Provide with Type 4X, IP66 enclosure rating. All transmitters shall be HART compatible.

2.5.2 Temperature Sensors

Provide the same sensor type throughout the project. The transmitter range must be the smallest available from the manufacturer and suitable for the application such that the range encompasses the expected range of temperatures to be measured. The end to end accuracy includes the combined effect of sensitivity, hysteresis, linearity and repeatability between the measured variable and the end user interface (graphic presentation) including transmitters if used.

2.5.2.1 Resistance Temperature Detector (RTD)

RTD shall be platinum, with an accuracy of plus or minus 0.1 percent at 32 degrees F. RTD shall be encapsulated in stainless steel Series 300.

2.5.2.2 Thermocouple

Thermocouple shall be factory assembled with Series 300 stainless steel sheathing. Wiring insulation shall be magnesium oxide. Minimum insulation resistance wire to wire or wire to sheath shall be 1.5 megohm at 500 V dc. Thermocouple shall be Type K. Thermocouple error shall not exceed that specified in ISA MC96.1. All wire/cable from thermocouple to

transmitter shall be of the type necessary to match the thermocouple used. Transmitter selected shall match the type of thermocouple provided. The transmitter shall include automatic cold junction reference compensation with span and offset adjustments, and upscale open thermocouple detection.

2.5.2.3 Thermowell

Thermowell shall be austenitic stainless steel. Calibrated thermowells shall be provided with 2 inch lagging neck and inside diameter insertion neck as required for the application. The thermowell shall include a connection box, sized to accommodate the temperature sensing device.

2.5.2.4 Temperature Sensor Details

2.5.2.4.1 Duct Probe Type

Ensure the probe is long enough to properly sense the air stream temperature.

2.5.3 Pressure Instrumentation

Pressure taps shall incorporate a block valve, and a gooseneck on all steam lines.

2.5.4 Pressure Sensor

The sensing element shall be either capsule, diaphragm, bellows, Bourdon tube, or solid state as applicable for the installation. The pressure transducer shall withstand up to 300 percent of rated pressure, with an accuracy of plus or minus 0.1 percent of full scale selected.

2.5.5 Flow Sensors

2.5.5.1 Airflow Measurement Array (AFMA)

2.5.5.1.1 Airflow Straightener

Provide AFMAs which contain an airflow straightener if required by the AFMA manufacturer's published installation instructions. The straightener must be contained inside a flanged sheet metal casing, with the AFMA located as specified according to the published recommendation of the AFMA manufacturer. In the absence of published documentation, provide airflow straighteners if there is any duct obstruction within 5 duct diameters upstream of the AFMA. Air-flow straighteners, where required, must be constructed of 0.125 inch aluminum honeycomb and the depth of the straightener must not be less than 1.5 inches.

2.5.5.1.2 Resistance to Airflow

The resistance to air flow through the AFMA, including the airflow straightener must not exceed 0.085 inch water gauge at an airflow of 2,000 fpm. AFMA construction must be suitable for operation at airflows of up to 5000 fpm over a temperature range of 40 to 120 degrees F.

2.5.5.1.3 Outside Air Temperature

In outside air measurement or in low-temperature air delivery applications, provide an AFMA certified by the manufacturer to be accurate

as specified over a temperature range of -20 to +120 degrees F.

2.5.5.1.4 Pitot Tube AFMA

Each Pitot Tube AFMA must contain an array of velocity sensing elements. The velocity sensing elements must be of the multiple pitot tube type with averaging manifolds. The sensing elements must be distributed across the duct cross section in the quantity and pattern specified or recommended by the published installation instructions of the AFMA manufacturer.

a. Pitot Tube AFMAs for use in airflows over 600 fpm must have an accuracy of plus or minus 5 percent over a range of 500 to 2500 fpm.

b. Pitot Tube AFMAs for use in airflows under 600 fpm must have an accuracy of plus or minus 5 percent over a range of 125 to 2500 fpm.

2.5.6 Electrical Instruments

Provide Electrical Instruments with an input range as indicated or sized for the application. Unless otherwise specified, AC instrumentation must be suitable for 60 Hz operation.

2.5.6.1 Current Transducers

Current transducers must accept an AC current input and must have an accuracy of plus or minus 0.5 percent of full scale. The device must have a means for calibration. Current transducers for variable frequency applications must be rated for variable frequency operation.

2.5.6.2 Current Sensing Relays (CSRs)

Current sensing relays (CSRs) must provide a normally-open contact with a voltage and amperage rating greater than its connected load. Current sensing relays must be of split-core design. The CSR must be rated for operation at 200 percent of the connected load. Voltage isolation must be a minimum of 600 volts. The CSR must auto-calibrate to the connected load or be adjustable and field calibrated. Current sensors for variable frequency applications must be rated for variable frequency operation.

2.5.6.3 Voltage Transducers

Voltage transducers must accept an AC voltage input and have an accuracy of plus or minus 0.25 percent of full scale. The device must have a means for calibration. Line side fuses for transducer protection must be provided.

2.5.7 Oxygen Analyzer

Oxygen analyzer must consist of a zirconium oxide sensor for continuous sampling and an air-powered aspirator to draw flue gas samples. The analyzer must be equipped with filters to remove flue air particles. Sensor probe temperature rating must be 815 degrees F. The sensor assembly must be equipped for flue flange mounting.

2.5.8 Carbon Monoxide Detector

Wall-mounted detector and transducer. Alarm relay and 4-20 mA current loop outputs; digital display; suitable for mounting in 4 by 4 electrical box. ETL listed to UL 61010-1; factory-calibrated alarm levels at 50 to 100

ppm; with calibration kit for field testing.

2.5.9 Damper End Switches

Each end switch must be a hermetically sealed switch with a trip lever and over-travel mechanism. The switch enclosure must be suitable for mounting on the duct exterior and must permit setting the position of the trip lever that actuates the switch. The trip lever must be aligned with the damper blade.

End switches integral to an electric damper actuator are allowed as long as at least one is adjustable over the travel of the actuator.

2.6 INDICATING DEVICES

All indicating devices must display readings in English (inch-pound) units.

2.6.1 Thermometers

Provide bi-metal type thermometers at locations indicated. Thermometers must have either 9 inch long scales or 3.5 inch diameter dials, with insertion, immersion, or averaging elements. Provide matching thermowells for pipe-mounted installations. Select scale ranges suitable for the intended service, with the normal operating temperature near the scale's midpoint. The thermometer's accuracy must be plus or minus 2 percent of the scale range.

2.6.1.1 Air-Duct Thermometers

Air-duct thermometers must have perforated stem guards and 45-degree adjustable duct flanges with locking mechanism.

2.6.2 Pressure Gauges

Provide pipe-mounted pressure gauges at the locations indicated. Gauges must conform to ASME B40.100 and have a 4 inch diameter dial and shutoff cock. Select scale ranges suitable for the intended service, with the normal operating pressure near the scale's midpoint. The gauge's accuracy must be plus or minus 2 percent of the scale range.

Gauges must be suitable for field or panel mounting as required, must have black legend on white background, and must have a pointer traveling through a 270-degree arc. Gauge range must be suitable for the application with an upper end of the range not to exceed 150 percent of the design upper limit. Accuracy must be plus or minus 3 percent of scale range. Gauges must meet requirements of ASME B40.100.

2.7 OUTPUT DEVICES

2.7.1 Actuators

Actuators must be electric (electronic) or pneumatic as indicated. All actuators must be normally open (NO), normally closed (NC) or fail-in-last-position (FILP) as indicated. Normally open and normally closed actuators must be of mechanical spring return type. Electric actuators must have an electronic cut off or other means to provide burnout protection if stalled. Actuators must have a visible position indicator. Electric actuators must provide position feedback to the controller as indicated. Actuators must smoothly and fully open or close

the devices to which they are applied. Electric actuators must have a full stroke response time in both directions of 10 seconds or less at rated load. Electric actuators must be of the foot-mounted type with an oil-immersed gear train or the direct-coupled type. Where multiple electric actuators operate from a common signal, the actuators must provide an output signal identical to its input signal to the additional devices. Pneumatic actuators must be rated for 25 psi operating pressure except for high-pressure cylinder-type actuators. All actuators must be rated for their operating environment. Actuators used outdoors must be designed and rated for outdoor use. Actuators under continuous exposure to water, such as those used in sumps, must be submersible.

2.7.1.1 Valve Actuators

Valve actuators must provide shutoff pressures and torques as indicated on the Valve Schedule.

2.7.1.2 Damper Actuators

Damper actuators must provide the torque necessary per damper manufacturer's instructions to modulate the dampers smoothly over its full range of operation and torque must be at least 6 inch-pounds/1 square foot of damper area for opposed blade dampers and 9 inch-pounds/1 square foot of damper area for parallel blade dampers.

2.7.1.3 Positive Positioners

Positive positioners shall have a mechanical position feedback mechanism and an adjustable operating range and starting point.

2.7.1.4 Electric Actuators

Each actuator must have distinct markings indicating the full-open and full-closed position. Each actuator must deliver the torque required for continuous uniform motion and must have internal end switches to limit the travel, or be capable of withstanding continuous stalling without damage. Actuators must function properly within 85 to 110 percent of rated line voltage. Provide actuators with hardened steel running shafts and gears of steel or copper alloy.

a. Two-position actuators must be single direction, spring return, or reversing type. Two position actuator signals may either be the control power voltage or line voltage as needed for torque or appropriate interlock circuits.

b. Modulating actuators must be capable of stopping at any point in the cycle, and starting in either direction from any point. Actuators must be equipped with a switch for reversing direction, and a button to disengage the clutch to allow manual adjustments. Provide the actuator with a hand crank for manual adjustments, as applicable. Modulating actuator input signals shall be a 4 to 20 mAdc signal.

2.7.1.5 Pneumatic Actuators

Provide piston or diaphragm type actuators with replaceable diaphragm/piston.

2.7.2 Solenoid-Operated Electric to Pneumatic Switch (EPS)

Solenoid-Operated Electric to Pneumatic Switches (EPS) must accept a voltage input to actuate its air valve. Each valve must have three-port operation: common, normally open, and normally closed. Each valve must have an outer cast aluminum body and internal parts of brass, bronze, or stainless steel. The air connection must be a 0.38 inch NPT threaded connection. Valves must be rated for 50 psig.

2.8 USER INPUT DEVICES

User Input Devices, including switches and momentary contact push-buttons. User input devices must be labeled for their function.

2.9 MULTIFUNCTION DEVICES

Multifunction devices are products which combine the functions of multiple sensor, user input or output devices into a single product. Unless otherwise specified, the multifunction device must meet all requirements of each component device. Where the requirements for the component devices conflict, the multifunction device must meet the most stringent of the requirements.

2.9.1 Current Sensing Relay Command Switch

The Current Sensing Relay portion must meet all requirements of the Current Sensing Relay input device. The Command Switch portion must meet all requirements of the Relay output device except that it must have at least one normally-open (NO) contact.

Current Sensing Relays used for Variable Frequency Drives must be rated for Variable Frequency applications unless installed on the source side of the drive. If used in this situation, the threshold for showing status must be set to allow for the VFD's control power when the drive is not enabled and provide indication of operation when the drive is enabled at minimum speed.

PART 3 EXECUTION

3.1 INSTALLATION

3.1.1 General Installation Requirements

Perform the installation under the supervision of competent technicians regularly employed in the installation of DDC systems.

3.1.1.1 Device Mounting Criteria

All devices must be installed in accordance with manufacturer's recommendations and as specified and indicated. Control devices to be installed in piping and ductwork must be provided with required gaskets, flanges, thermal compounds, insulation, piping, fittings, and manual valves for shutoff, equalization, purging, and calibration. Strap-on temperature sensing elements must not be used except as specified. Spare thermowells must be installed as indicated. Devices located outdoors must have a weathershield.

3.1.1.2 Labels and Tags

Match labels and tags to the unique identifiers indicated on the As-Built drawings. Label all enclosures and instrumentation. Tag all sensors and actuators in mechanical rooms. Tag airflow measurement arrays to show flow rate range for signal output range, duct size, and pitot tube AFMA flow coefficient. Tag duct static pressure taps at the location of the pressure tap. Provide plastic or metal tags, to match existing plant practice, mechanically attached directly to each device or attached by a metal chain or wire. Labels exterior to protective enclosures must be engraved plastic and mechanically attached to the enclosure or instrumentation. Labels inside protective enclosures may attached using adhesive, but must not be hand written.

3.1.2 Weathershield

Provide weathershields for sensors located outdoors. Install weathershieldssuch that they prevent the sun from directly striking the sensor and prevent rain from directly striking or dripping onto the sensor. Install weather shields with adequate ventilation so that the sensing element responds to the ambient conditions of the surroundings. When installing weathershields near outside air intake ducts, install them such that normal outside air flow does not cause rainwater to strike the sensor.

3.1.3 Indication Devices Installed in Piping and Liquid Systems

Provide snubbers for gauges in piping systems subject to pulsation. For gauges for steam service use pigtail fittings with cock. Install thermometers and temperature sensing elements in steam or liquid systems in thermowells. Provide spare Pressure/Temperature Ports (Pete's Plug) for all temperature and pressure sensing elements installed in liquid systems for calibration/testing.

3.1.4 Temperature Sensors

Install temperature sensors in locations that are accessible and provide a good representation of sensed media. Installations in dead spaces are not acceptable. Calibrate and install sensors according to manufacturer’s instructions. Select sensors only for intended application as designated or recommended by manufacturer.

3.1.4.1 Duct Temperature Sensors

3.1.4.1.1 Probe Type

Place tip of the sensor in the middle of the airstream or in accordance with manufacturer's recommendations or instructions.Provide a gasket between the sensor housing and the duct wall. Seal the duct penetration air tight. When installed in insulated duct, provide enclosure or stand off fitting to accommodate the thickness of duct insulation to allow for maintenance or replacement of the sensor and wiring terminations. Seal the duct insulation penetration vapor tight.

3.1.5 Air Flow Measurement Arrays (AFMA)

Install AFMAs with the manufacturer's recommended minimum distances between upstream and downstream disturbances. Airflow straighteners may be used to reduce minimum distances as recommended by the AFMA

manufacturer.

3.1.6 Dampers

3.1.6.1 Damper Actuators

Provide spring return actuators which fail to a position that protects the served equipment and space on all control dampers related to freeze protection or force protection. Do not mount actuators in the air stream. Do not connect multiple actuators to a common drive shaft. Install actuators so that their action seal the damper to the extent required to maintain leakage at or below the specified rate and so that they move the blades smoothly throughout the full range of motion.

3.1.7 Thermometers and Gauges

3.1.7.1 Local Gauges for Actuators

Provide a pressure gauge at each pneumatic control input and output. Pneumatic actuators must have an accessible and visible pressure gauge installed in the tubing lines at the actuator as indicated.

3.1.7.2 Thermometers

Mount devices to allow reading while standing on the floor or ground, as applicable.

3.1.8 Wire and Cable

Provide complete electrical wiring for the Control System, including wiring to transformer primaries. Wire and Cable must be installed without splices between control devices and in accordance with NFPA 70 and NFPA 90A. Instrumentation grounding must be installed per the device manufacturer's instructions and as necessary to prevent ground loops, noise, and surges from adversely affecting operation of the system. Test installed ground rods as specified in IEEE 142. Cables and conductor wires must be tagged at both ends, with the identifier indicated on the shop drawings. Electrical work must be as specified in Section 26 20 00 INTERIOR DISTRIBUTION SYSTEM and as indicated. Wiring external to enclosures must be run in raceways.

3.1.9 Pneumatic Lines

Run tubing concealed in finished areas, run tubing exposed in unfinished areas like mechanical rooms. For tubing enclosed in concrete, provide rigid metal conduit. Run tubing parallel and perpendicular to building walls. Use 5 foot maximum spacing between tubing supports. With the compressor turned off, test each tubing system pneumatically at 1.5 times the working pressure and prove it air tight, locating and correcting leaks as applicable. Caulking joints is not permitted. Do not run tubing and electrical power conductors in the same conduit.

a. Install pneumatic lines must such that they are not exposed to outside air temperatures. Conceal pneumatic lines except in mechanical rooms and other areas where other tubing and piping is exposed.

b. Install all tubes and tube bundles exposed to view in lines parallel to the lines of the building. Route tubing in mechanical/electrical so that the lines are easily traceable.

c. Purge air lines of dirt, impurities and moisture before connecting to the control equipment. Number-code or color-code air lines and key the coding in the As-Built Drawings for future identification and servicing the control system.

3.1.9.1 Pneumatic Lines In Mechanical/Electrical Spaces

In mechanical/electrical spaces, use stainless steel tubing for pneumatic lines. Provide adequate support for tubing to prevent damage.

3.1.9.2 Pneumatic Lines External to Mechanical/Electrical Spaces

External to mechanical/electrical spaces, use steel pipe or stainless steel. Support pipe and tubing not in raceways every 8 feet.

3.1.9.3 Connection to Liquid and Steam Lines

Use Series 300 stainless steel with stainless-steel compression fittings for connection of sensing elements and transmitters to liquid and steam lines.

3.1.9.4 Connection to Ductwork

Use stainless steel tubing for connections to sensing elements in ductwork.

3.1.9.5 Tubing Connection to Actuators

For final connections to actuators use stainless braided hose no more than 18 inches long and unsupported at the actuator.

-- End of Section --

THIS PAGE HAS BEEN INTENTIONALLY LEFT BLANK

SECTION 23 09 93.13

SEQUENCES OF OPERATION FOR BOILER CONTROL
09/16

PART 1 GENERAL

1.1 SUMMARY

This document provides the description of the processes within the Burner Management System (BMS), focusing on the information necessary to properly operate the existing four boilers, using the new burners, fans and other equipment installed as part of Project P224 and integrated into the controls system provided previously by AC Technical Services. Each boiler BMS system has been updated for the new equipment installed as part of this project.

Each dual fuel boiler control system consists of two mutually dependent PLCs, a local operator interface screen (HMI) and all the motors, actuators, relays valves, pressure switches, flow meters and other appurtenances necessary to monitor and control the physical boiler processes. These control systems are also tied to the plant-wide SCADA system to provide the operator with a centralized means to interact with all of the plant controls.

Project 224 is replacing the fuel combustion sub-systems (burners) on each of the four boilers with identical dual fuel burners and fuel control skids. Project 224 will not replace any of the BMS or PCS hardware, however, the BMS configuration will change as will some of the field wiring terminals.

1.2 REFERENCES

The publications listed below form a part of this specification to the extent referenced. The publications are referred to within the text by the basic designation only.

NATIONAL FIRE PROTECTION ASSOCIATION (NFPA)

NFPA 85	(2011; Errata 2011) Boiler and Combustion Systems Hazards Code

1.3 SUBMITTALS

Government approval is required for submittals with a "G" designation; submittals not having a "G" designation are for Contractor Quality Control approval. Submit the following in accordance with Section 01 33 00 SUBMITTAL PROCEDURES:

SD-02 Shop Drawings

P&ID Drawings; G
Loop Sheet Diagrams; G

PART 2 PRODUCTS

2.1 EXISTING CONTROLS

The existing BMS is running on a Honeywell HC900 PLC that is to remain in service.

The Human Machine Interface (HMI) panels are Red Lion G3 model, 15 inch size with touch screen capability and will remain in service.

The control room display and other hardware will also remain in service.

The Remote Input/Output panels will remain in service, but will have the obsolete field wiring points removed from the field wiring terminal strips and the new field wiring cables are to be terminated to the field wiring terminal strips. The existing wires to remove and the new wires to install are detailed on the drawings.

New BMS hardware is not being provided as part of Project 224.

2.1.1 Requirements Prior to Starting Work

Submit for approval P&ID Drawings for each burner or sub-system and loop sheet diagrams for each control loop to be terminated to the BMS panels.

PART 3 EXECUTION

3.1 SEQUENCE OF OPERATION FOR OPERATOR INTERFACE

3.1.1 HMI Interface

The HMI presents the operator with multiple pages of interactive elements, including pushbuttons, selector switches and controller settings. With any interactive element (Auto/Manual selection, Start/Stop, SP setting, OP setting, etc.), the first touch calls a small popup window containing the element to be changed. For example, touching the Boiler Selector Switch on the Overview page calls a small window with only the Boiler Selector Switch on display.

There are various ways to change settings in this window, depending on what was selected:

a. Selector Switches: Once the selector switch is called up, the next touch changes its selection (from OFF to ON, from ON to OFF, etc…). Touching the "Hide" button causes the window to close.

b. Pushbuttons: Once the pushbutton is called up, the next touch acts as a push of the button. Touching the "Hide" button causes the window to close.

c. Data Entry: The window called for data entry (such as controller SP, BIAS, or OP) is a number pad. Using the number pad, you may enter the new value for the SP or OP and then touch "Enter" to actually enter the new value and close the window. You can also touch the red "X" to clear your changes if you accidentally input the wrong data.

d. Auto/Manual: Once the AUTO or MAN area is pressed in the lower left corner of any given controller, a window with the current setting appears. It includes a set of arrows, up and down, by which you can

change the setting. Pressing "Enter" closes the window. This feature is only available if the AUTO or MAN appears in white (i.e. it is not grayed out).

Also, there are two functions native to the HMI:

a. HMI Calibration: If the HMI is not responding properly to touches (i.e. selection is off-center from the touch point), you can calibrate the screen by following these steps:

(1) Go to MENU > NEXT MENU > HMI SETUP
(2) On the HMI SETUP page, select the "TOUCH CAL" button.
(3) Follow the prompts to complete touch calibration.

b. HMI Screen Cleaning: If the HMI screen is dirty and requires cleaning, you must first inform the HMI that you intend to clean it (otherwise it will respond to touches during cleaning that can cause unwanted results). To clean the screen, use the following steps:

(1) Go to MENU > NEXT MENU > HMI SETUP
(2) On the HMI SETUP page, select the "CLEAN SCREEN" button.

NOTE: The screen will change to a 30-second timer indicating that you can clean the screen during that period without a screen response. Once the timer expires, the screen will return to the HMI SETUP page.

3.2 CONTROL ELEMENTS

Within the restrictions imposed by interlocks, some of the motors and actuators tied in the controls systems can be manually controlled via the HMI. This applies to motor start/stop commands, VFD speed, damper and valve positions, etc. The start/stop commands are accessible via selector switches and pushbuttons, and the speed/position commands are accessible via loop and hand/auto controllers.

3.2.1 Selector Switch and Pushbutton Command

The switch position indicates the current function being commanded, (e.g., turn a motor on/off, enable/disable a certain function, etc…). To change that command, press on the switch and then select the desired command from the ensuing popup. Note that Pushbuttons are typically only used for single action commands (e.g., Lockout reset, change screen, etc…), whereas selector switches are used for on/off, enable/disable type commands.

Note that in some cases, pressing on the selector switch or pushbutton will not bring up a popup or allow for a command change. This happens when a function is internally disabled due to interlocks (e.g., trying to start the FD Fan when the ID Fan is off).

3.2.2 Selector Switch and Pushbutton Feedback

The selector switches and pushbuttons "header" background and frame colors are used to provide function status (e.g., motor is running/stopped, function is enable/disabled, etc…). The color scheme is as follows:

a. Background is used for function status

(1) Green = Motor running, function enabled, Boiler Master is following Plant Master

(2) Gray = Motor off, function disabled
(3) Yellow = Boiler Master using local pressure

3.2.3 Loop and Hand/Auto Controllers

A controller is used to control the magnitude of a final control element (e.g., motor speed, actuator position, etc…). It does so either by directly interfacing with the control systems physical output or indirectly through another controller. A controller has two operating modes, Auto and Manual. There are two types of controllers (Loop and Hand/Auto), and though they behave very differently in their respective Auto modes, they behave the same in Manual mode. These operating modes are selected by pressing MAN or AUTO on the bottom left corner of the controller block.

3.2.3.1 Loop Controllers

A Loop controller consists of three core elements (PV, SP, and OP) and occasionally a BIAS element.

a. PV - Process Variable (e.g., boiler pressure)

b. SP - Setpoint (e.g., desired boiler pressure set by the operator)

c. OP - Output (e.g., Boiler Master controller output signal to the Air and Oil controllers)

d. BIAS - Bias (e.g., offsets the Plant Signal command sent to the output)

3.2.3.2 Loop Controllers - Auto Mode

In Auto mode, the Loop controller acts as a true PID loop by automatically adjusting the output (OP) sent to a final control element to get the process variable (PV) to match the setpoint (SP). Note that the setpoint can either be set by an automated internal process in the control system (bottom right = RSP) or manually by the operator (bottom right = LSP). This is not something that can be changed by the operator. It is preset in the control system. When in LSP, the setpoint can be adjusted by pressing on the number next to "SP".

3.2.3.3 Loop Controllers - Manual Mode

In Manual mode, the Loop controller stops automatically adjusting the output (OP) and allows the operator to manually adjust that output by pressing on the number next to "OP".

When available, the Bias value can be adjusted by pressing on the number next to "BIAS".

3.2.4 Hand/Auto Controllers

A Hand/Auto controller consists of two core elements (CMD and OP) and sometimes BIAS and/or FDBK.

a. CMD - Input Command (e.g., Air controller output signal into the FD Fan controller)

b. OP - Output (e.g., FD Fan controller output signal to the FD Fan)

c. BIAS - Bias (e.g., offset the CMD sent to the output(OP))

d. FDBK - Feedback signal (e.g., actual FD Fan speed feedback signal)

3.2.4.1 Auto/Hand Controllers - Auto Mode

In Auto mode, the Hand/Auto controller takes the input command (CMD) value, adds the Bias value to it, and passes the result directly to the output (OP). Note that the input command can either be set by an automated internal process in the control system (bottom right = REM) or manually by the operator (bottom right = LOC). When in LOC, the input command can be adjusted by pressing on the number next to "CMD". Typically, the input command comes from a "master" controller such as the Air controller passing its output to the input command of both FD Fan and WB Damper controllers.

3.2.4.2 Auto/Hand Controllers - Manual Mode

In Manual mode, the Hand/Auto controller stops automatically adjusting the output (OP) and allows the operator to manually adjust that output by pressing on the number next to "OP".

When available, the Bias value can be adjusted by pressing on the number next to "BIAS".

3.3 BOILER AND BURNER START INTERLOCKS AND LOCKOUTS

There are several conditions that are required to maintain the safety of the boiler, particularly while it's running. The Interlocks are a list of those conditions which need to be met to even allow the boiler and/or individual burners to start (e.g., enable the Boiler switch); while the Lockouts are those conditions which are required to stay active in order to keep the boiler and/or individual burners running. For all practical purposes, the list of Lockout conditions includes all the Interlock conditions and a few more. Both Interlock and Lockout conditions are explained and listed below.

3.3.1 Interlocks

The Overview screen provides a visual indication of the state of the Boiler (Master) and individual Burners Interlocks via the Master / Burner BMS Status windows.

The respective INTLKS buttons changes color based on the Interlocks state.

a. Orange = Not all Interlocks are met, and Boiler/Burner switch is disabled

b. Green = All Interlocks are met, and Boiler/Burner switch is enabled

c. Gray = Boiler/Burner switch is already in RUN, and Interlocks are now ignored

To see a list of the Interlock conditions and their statuses, press any of the INTLKS buttons and another window will pop up.

3.3.2 Lockouts

As with the Interlocks, the Master / Burners BMS Status windows also provide a visual indication of their respective Lockouts state. An active Master Lockout while the boiler is running will force the Boiler switch to STOP, thus shutting down the boiler (The ID Fan will stay on for an additional 30 seconds to execute a post-purge). An active Burner Lockout while its respective burner is active will force that burner switch to STOP, thus shutting down that burner. Once all the active Lockout conditions are cleared, the RESET button needs to be pressed to effectively reset the boiler and/or burner Lockouts and enable the boiler and/or burner to be started again (assuming that all the Interlocks are satisfied).

The LOCKOUTS button changes color based on the Lockout state.

a. Red = Active Lockout condition(s)

b. Green = No active Lockout conditions, but the Lockouts need to be reset via the RESET button

x. Gray = No active Lockout conditions

For a comprehensive list of all the lockout conditions and their triggers, see the "Lockout Alarms / Lockout First Out" section under "Alarm Messages". To see a list of the Lockout conditions and their statuses, press on the LOCKOUTS button corresponding to the desired Boiler or Burner. The first window represents the popup for the Master Lockouts; the second window represents the popup for either Burner Lockouts.

3.4 BOILER OPERATION

3.4.1 Preliminary

The operator is responsible for familiarizing himself with NFPA 85 requirements and/or those set forth by the plant management for the proper operation of the boilers.

The ID, FD, and FGR Fans are equipped with Hand/Off/Auto (HOA) switches on the HMI to allow for full control of those fans. Note that the FD Fan is only enabled when the ID Fan is running. Under normal circumstances, both switches should be set to AUTO to allow the controls system to start and stop the fans as needed by the process. Note that it is possible to change the state of those switches at any time (whether the boiler is running or not).

This full control was provided for the primary purpose of allowing an operator to run the fans while leaving the boiler off. Note that when a fan is running and the boiler is offline (Boiler switch is off), the fan and its damper loop controllers can be set to MANUAL mode and manually controlled. This function is used when cooling the boiler after operation and in preparation for urgent maintenance. Turning the Boiler switch on during that time will automatically set those loop controllers to AUTO mode, and allow the controls system to drive the air and draft where needed for proper purge / combustion.

3.4.2 Boiler Startup

3.4.2.1 Fuel Selection

Each boiler is equipped with two dual fuel burners, each with local safety shutoff valves and other controls. Each boiler is equipped with a fuel control skid that responds to the operator's selection of which fuel to use and modulates fuel flow to the setpoints of the Combustion Control computer.
The operator will manually select which fuel to use, when initially starting the boiler. If natural gas fuel is selected, there is no pump selection required as the delivery pressure is supplied to the Heating Plant is adequate for operating the boiler under all conditions.

If fuel oil is the selected fuel, then one or more fuel oil pumps need to be manually started to provide adequate fuel pressure to begin firing the burners. There are four fuel oil pumps that can supply operating fuel oil pressure to the fuel oil header for all burners. Each of the pumps can take suction from either of the primary fuel oil storage tanks and return flow to either of these tanks.

3.4.2.2 Boiler Switch "RUN"

Turn the boiler on by switching the boiler switch to RUN:

a. A five-minute purge is automatically initiated.

(1) The ID Fan is automatically started (if the ID Fan switch is set to AUTO).
(2) The FD Fan is automatically started (if the FD Fan switch is set to AUTO).
(3) The FGR fan is automatically started (if the FGR fan switch is set to AUTO.
(4) The ID, FD and FGR Fans and Dampers are commanded to purge speed/position.
(5) Purge is complete once the purge interlocks have been active for 5 consecutive minutes.

b. A 15 second low-fire sequence is automatically initiated.

(1) The ID, FD and FGR Fans and Dampers are commanded to low-fire speed/position.
(2) Low-fire is complete once the low-fire interlocks have been active for 15 consecutive seconds.

c. If all other necessary interlocks are met, the burners are now enabled.

3.4.2.3 Turn First Burner "ON"

Turn the first burner on (operator can decide whether to start with the top or bottom burner) by switching that burner switch to RUN. This same sequence is used for either Natural Gas or Fuel Oil firing of the boiler.

a. PTFI (Pilot Trial for Ignition)

(1) The pilot is automatically ignited, and flame is verified within 10 seconds. The pilot flame remains in operation for 15 seconds to light the main burner (MFTI, below)

(2) If no pilot flame is present within 10 seconds, the burner is locked-out.

b. MTFI (Main Trial for Ignition) after Pilot Flame is verified

(1) The main burner is automatically ignited, and flame is verified
(2) If the flame fails at any point after this step is started, the burner is locked-out
(3) Pilot gas is turned off after 15 seconds

c. Flame Stabilization of Main burner

(1) This is a 10 second window after cutting out the pilot gas to verify that the flame is still present while only running on the selected main burner fuel (gas or oil).

d. Main Flame Online

(1) The burner has been running only on main fuel only for more than 10 seconds.
(2) Note that while running on one burner, the BLR MSTR (Boiler Master) controller is forced to 0 as the startup configuration.
(3) The firing rate can be raised during single burner operation, but the rate must be lowered to minimum when the second burner is to be placed into operation. This step is necessary because both burners operate at the same firing rate. If the second burner were to be started at a higher firing rate (fuel pressure), the result would be a significant furnace puff as the firing rate was immediately doubled. The method of starting the second burner is to return the first burner to minimum fire before lighting the second burner.

3.4.2.4 Turn Second Burner "ON"

Turn the second burner on (if needed), following the same procedure as the first burner.

a. Once the second burner is online (Main Flame Online), the Boiler Master controller is released to MANUAL mode.

b. The operator can now start adjusting the Boiler Master controller to the desired output (OP).

c. Once the Boiler Master controller PV is within a few pounds of the desired setpoint (SP), the controller can be set to AUTO mode if desired.

3.4.3 Boiler Shutdown

There are a number of ways or reasons to shut down the boiler and some of those will be outlined here.

a. Individual Burner Shutdown

(1) Gradually decrease Boiler Master controller output (OP) to 0.
(2) Turn desired burner switch to STOP. The other burner may remain in operation.

b. Boiler Shutdown

(1) Gradually decrease Boiler Master controller output (OP) to 0.
(2) Turn Boiler switch to STOP. The burners will automatically shutdown and a 30 second post-purge will be executed before the fans automatically shutdown.

3.4.4 Low Water Cutout Bypass Station

The Low Water Cutout Bypass Station is designed to allow the operator to blow-down the water columns while the boiler is running without triggering a Low Water Cutout Lockout. The Low Water Cutout Bypass is only active while the Bypass Pushbutton is pressed, but with the additional safeguard that regardless how long the Pushbutton is pressed, the Low Water Cutout Bypass will time-out after 2.5 minutes. This is designed to prevent an accidental or intentional "permanent" bypass of the Low Water Cutout safeties.

A description and function of the various lighted and regular pushbuttons is listed below:

3.4.4.1 Red Pushbutton (Bypass Pushbutton)

Pushbutton is used to activate the Low Water Cutout Bypass. Must be pressed and held for the duration of the column blow-down to prevent a boiler Lockout caused by the BMS sensing a low water condition. This bypass switch allows the water column to be blown down for daily testing and to prevent plugging of the sensing lines.

3.4.4.2 Red Lighted Pushbutton (Low Water Condition Indicator)

Provide low water condition indicator:

a. The pushbutton function of this device is to test that the light within this pushbutton is still functional. Pushing this button will illuminate the lamp, but not send a trip signal to the BMS.

b. The light function of this device illuminates to indicate a low water condition. The behavior of the light is indicates which condition is active:

(1) Steady On Light indicates that the Low Water Alarm Probe is annunciating.
(2) Slow Blinking Light indicates that the Low Water Cutout Probe is annunciating.
(3) Fast Blinking Light indicates that the Low Water Cutout Float is annunciating.

3.4.4.3 Orange Lighted Pushbutton (Low Water Cutout Bypass Status Indicator)

Provide low water cutout bypass status indicator:

a. The pushbutton function of this device is to test that the light within this pushbutton is still functional. Pushing this button will illuminate the lamp, but not send a trip signal to the BMS.

b. The light function of this device illuminates to indicate a low water condition. The behavior of the light is indicates which

condition is active:

(1) Light OFF indicates that the Bypass Pushbutton has not been pressed or has timed out.
(2) Steady Light indicates that the Low Water Cutout Bypass function is active.
(3) Slow Blinking Light indicates that the Low Water Cutout Bypass function is active but will time out within 30 seconds.

c. A log of all Bypass activities is recorded in the events log of the boiler HMI. They are recorded as follows:

(1) Bypass Pushbutton is pressed >> BYPASS TEST - ACTIVE
(2) Low Water Cutout Bypass times out >> BYPASS TEST - PUSHBUTTON ACTIVATED FOR TOO LONG
(3) Low Water Alarm Probe >> BYPASS TEST - DRUM LEVEL LOW PROBE
(4) Low Water Cutout Probe >> BYPASS TEST - DRUM LEVEL LOW CUTOUT PROBE
(5) Low Water Cutout Float >> BYPASS TEST - DRUM LEVEL LOW CUTOUT FLOAT

3.4.5 Alarm Messages

Following is a list of all the alarms that can be triggered by each dual fuel boiler. With the exception of "Not in Auto", all these alarms will trigger the boiler's horn / strobe and will show up in the HMI and SCADA alarm logs. A particular device might have several alarm triggers associated with it (e.g., FD FAN - FAILED TO START, FD FAN - VFD FAULT, etc…); however, to help describe each type of alarms, they are listed by type instead of by device. Each type has a description of what causes that type of alarm. For informational purposes, the SCADA ALARMS screen (not the ALARMS page found on each tab) provides a list of a number of the following alarms and their analog trigger setpoints.

3.4.5.1 Miscellaneous Alarms

Provide the following:

a. ALARM TEST PUSHBUTTON This alarm is triggered when the white illuminated pushbutton located on the front panel of the boiler control cabinet is pressed. The purpose is to test the functionality of the boiler alarm system: horn, strobe and alarm log. This should be tested once a shift.

b. BMS CONTROLLER - DEVICE FAULT This alarm is triggered when the watchdog relay fails to receive a regular pulse from the BMS controller.

c. BMS HC900 (CPU xB) - LOW BATTERY (x=1 to 4 for Boiler 1,2,3 & 4) This alarm is triggered when the BMS controller HC900 processor battery is low. It is important to replace this battery soon after this alarm start appearing since some configuration variables will be lost upon loss of battery and regular power.

d. CC HC900 (CPU xA) - LOW BATTERY (x=1 to 4 for Boiler 1,2,3 & 4) This alarm is triggered when the Combustion controller HC900 processor battery is low. It is important to replace this battery soon after this alarm start appearing since some configuration variables will be lost upon loss of battery and regular power.

3.4.5.2 Analog Alarms

This alarm is triggered when the process value is over / below an alarm setpoint for a certain amount of time. This alarm is disabled if the Analog Input Failure alarm is active for that point.

a. DRUM PRESSURE - HIGH ALARM - ANALOG
b. STACK O2 LEVEL - HIGH ALARM
c. STACK O2 LEVEL - LOW ALARM

3.4.5.3 Analog Input Failure Alarm

This alarm is triggered when the controls system detects a faulty analog input. Most of the analog inputs into the controls system are 4-20mA inputs and thus allows the controls system to monitor the integrity of that input. The main purpose for this type of alarm is to prevent false alarms (e.g., Feedback Deviation) when the input failure is the real issue.

a. AIR FLOW - ANALOG INPUT FAILURE
b. DRUM LEVEL - ANALOG INPUT FAILURE
c. DRUM PRESSURE - ANALOG INPUT FAILURE
d. FD FAN VFD FEEDBACK - ANALOG INPUT FAILURE
e. FD DAMPER FEEDBACK - ANALOG INPUT FAILURE
f. FEEDWATER VALVE FEEDBACK - ANALOG INPUT FAILURE
g. FUEL OIL VALVE FEEDBACK - ANALOG INPUT FAILURE
h. FURNACE PRESSURE - ANALOG INPUT FAILURE
i. ID DAMPER FEEDBACK - ANALOG INPUT FAILURE
j. ID FAN VFD FEEDBACK - ANALOG INPUT FAILURE
k. OIL FLOW - ANALOG INPUT FAILURE
l. GAS FLOW - ANALOG INPUT FAILURE
m. PLANT MASTER - ANALOG INPUT FAILURE
n. STACK O2 - ANALOG INPUT FAILURE
o. STEAM FLOW - ANALOG INPUT FAILURE
p. WINDBOX DAMPER FEEDBACK - ANALOG INPUT FAILURE
q. FUEL GAS VALVE FEEDBACK - ANALOG INPUT FAILURE
r. FGR FAN VFD FEEDBACK - ANALOG INPUT FAILURE
s. FGR FAN DAMPER FEEDBACK - ANALOG INPUT FAILURE

3.4.5.4 Burner Alarms

Burner Alarms (x=1 for Burner#1 x=2 for Burner#2)

a. BURNER x LIGHT-OFF ATTEMPT FAILED This alarm triggers when the burner fails to light whether under Pilot or Main flame. A one-minute delay is forced before another light-off attempt can be made.

b. BURNER x MAIN FLAME FAILED TO LIGHT WITHIN 3 TRIES. This alarm triggers when the Main burner fails to light 3 times in a row. A five- minute delay is forced before another light-off attempt can be made.

c. BURNER x PILOT FAILED TO LIGHT WITHIN 3 TRIES This alarm triggers when the pilot fails to light 3 times in a row. A five-minute delay is forced before another light-off attempt can be made.

d. BURNER x SCANNER - FALSE FLAME DETECTED This alarm triggers if the burner flame scanner picks up a flame signal while the burner is

off.

3.4.5.5 Bypass Test

See "Low Water Cutout Bypass Station" heading for a description of the following events/alarm. Note that only "PUSHBUTTON ACTIVATED FOR TOO LONG" is an actual alarm which will trigger the boiler horn /strobe. The rest are just events that show up in the SCADA and HMI alarm logs.

a. BYPASS TEST - ACTIVE
b. BYPASS TEST - DRUM LEVEL FLOAT - LOW CUTOUT
c. BYPASS TEST - DRUM LEVEL PROBE - HIGH ALARM
d. BYPASS TEST - DRUM LEVEL PROBE - LOW ALARM
e. BYPASS TEST - DRUM LEVEL PROBE - LOW CUTOUT
f. BYPASS TEST - PUSHBUTTON ACTIVED FOR TOO LONG

3.4.5.6 Communications Failure

This alarm is triggered if there is a communication failure between controls systems. Communication between controls systems is necessary for proper function. Thus, to minimize the risk of total communication failure, a redundant network (LAN 11 and LAN 12) is used. Each network path is constantly monitored and an alarm is triggered if it fails (i.e., "COMMUNICATION FAILURE LAN 11" or "COMMUNICATION FAILURE LAN 12"). If both network paths between two controls systems fail, then the "TOTAL COMMUNICATION FAILURE" alarm is triggered. Note that to allow for network maintenance, there is a ten minute delay before a single path failure triggers an alarm. Total failure causes an immediate alarm.

a. BMS To CC (Combustion Controller HC900 is not receiving a response from the BMS HC900)

(1) COMMUNICATION FAILURE LAN 11 - BMS NOT RESPONDING TO CC
(2) COMMUNICATION FAILURE LAN 12 - BMS NOT RESPONDING TO CC
(3) TOTAL COMMUNICATION FAILURE - BMS NOT RESPONDING TO CC

b. CC to BMS (BMS HC900 is not receiving a response from the Combustion Controller HC900)

(1) COMMUNICATION FAILURE LAN 11 - CC NOT RESPONDING TO BMS
(2) COMMUNICATION FAILURE LAN 12 - CC NOT RESPONDING TO BMS
(3) TOTAL COMMUNICATION FAILURE - CC NOT RESPONDING TO BMS

c. Plant Master 9A to CC (Combustion Controller HC900 is not receiving a response from the PM9A HC900)

(1) COMMUNICATION FAILURE LAN 11 - PLANT MASTER 9A NOT RESPONDING TO CC
(2) COMMUNICATION FAILURE LAN 12 - PLANT MASTER 9A NOT RESPONDING TO CC
(3) TOTAL COMMUNICATION FAILURE - PLANT MASTER 9A NOT RESPONDING TO CC

d. Plant Master 9B to CC (Combustion Controller HC900 is not receiving a response from the PM9B HC900)

(1) COMMUNICATION FAILURE LAN 11 - PLANT MASTER 9B NOT RESPONDING TO CC

(2) COMMUNICATION FAILURE LAN 12 - PLANT MASTER 9B NOT RESPONDING TO CC
(3) TOTAL COMMUNICATION FAILURE - PLANT MASTER 9B NOT RESPONDING TO CC

3.4.5.7 Device Fault

This alarm is triggered when the listed device experiences an internal fault or power failure.

a. ETHERNET SWITCH 1 - DEVICE FAULT
b. ETHERNET SWITCH 2 - DEVICE FAULT
c. POWER SUPPLY 1 - DEVICE FAULT
d. POWER SUPPLY 2 - DEVICE FAULT
e. O2 SENSOR - DEVICE FAULT

3.4.5.8 Digital Alarms

This alarm is triggered when the mechanical alarm switch monitoring a particular process is "tripped" due to the process exceeding the mechanical setpoint.

a. DRUM LEVEL FLOAT - LOW CUTOUT
b. DRUM LEVEL PROBE - HIGH ALARM
c. DRUM LEVEL PROBE - LOW ALARM
d. DRUM LEVEL PROBE - LOW CUTOUT
e. DRUM PRESSURE SWITCH 01 - HIGH ALARM
f. DRUM PRESSURE SWITCH 02 - HIGH ALARM
g. FURNACE PRESSURE SWITCH - HIGH ALARM
h. FURNACE PRESSURE SWITCH - LOW ALARM

3.4.5.9 Failed to Start

This alarm is triggered when a device's run contact fails to make within a certain amount of time after the controls system gives it a run command.

a. FD FAN - FAILED TO START
b. ID FAN - FAILED TO START
c. FGR FAN - FAILED TO START

3.4.5.10 Failed To Open

This alarm is triggered when a valve's open contact fails to make (or close contact fails to break) within a certain amount of time after the controls system gives it an open command.

a. BURNER 1 OIL SSV - FAILED TO OPEN
b. BURNER 2 OIL SSV - FAILED TO OPEN
c. MAIN OIL SSV - FAILED TO OPEN
d. MAIN PILOT SSV - FAILED TO OPEN
e. BURNER 1 GAS SSV - FAILED TO OPEN
f. BURNER 2 GAS SSV - FAILED TO OPEN
e. MAIN GAS SSV - FAILED TO OPEN

3.4.5.11 Failed to Close

This alarm is triggered when a valve's close contact fails to make (or

open contact fails to break) within a certain amount of time after the controls system gives it a close command.

a. MASTER FUEL TRIP RELAY - FAILED TO CLOSE
b. BURNER 1 OIL SSV - FAILED TO CLOSE
c. BURNER 2 OIL SSV - FAILED TO CLOSE
d. BURNER 1 GAS SSV - FAILED TO CLOSE
e. BURNER 2 GAS SSV - FAILED TO CLOSE

3.4.5.12 Feedback Deviation

This alarm is triggered if a device position/speed feedback value is outside a certain range from the position/speed command given by the controls system. It is used to verify that the device is following the command given by the controls system. This alarm is disabled if the analog input failure alarm is active for that point.

a. FD FAN VFD - FEEDBACK DOES NOT MATCH COMMAND
b. FEEDWATER VALVE - FEEDBACK DOES NOT MATCH COMMAND
c. FUEL OIL VALVE - FEEDBACK DOES NOT MATCH COMMAND
d. FUEL GAS VALVE - FEEDBACK DOES NOT MATCH COMMAND
e. ID DAMPER - FEEDBACK DOES NOT MATCH COMMAND
f. ID FAN VFD - FEEDBACK DOES NOT MATCH COMMAND
g. FGR FAN DAMPER - FEEDBACK DOES NOT MATCH COMMAND
h. FGR FAN VFD - FEEDBACK DOES NOT MATCH COMMAND
i. FD FAN DAMPER - FEEDBACK DOES NOT MATCH COMMAND
j. FD FAN VFD - FEEDBACK DOES NOT MATCH COMMAND

3.4.5.13 Lockout Alarms / Lockout First Out

This alarm is triggered by a Lockout condition becoming active. The first Lockout condition to become active will have its alarm message preceded by "LOCKOUT FIRST OUT -" whereas any subsequent Lockout alarms will have its alarm message preceded by "LOCKOUT ALARM - ". The Lockout conditions are not always monitored and the list below shows when the conditions are monitored. A description is provided where needed to clarify the Lockout condition.

a. A Master Lockout will force the boiler switch to STOP and cause the boiler to shutdown, while first executing a 30 second post-purge.

(1) Monitored - Always

> BURNER 1 OIL SSV - FAILED TO CLOSE
> BURNER 1 GAS SSV - FAILED TO CLOSE
> BURNER 2 OIL SSV - FAILED TO CLOSE
> BURNER 2 GAS SSV - FAILED TO CLOSE
> DIGITAL INPUT TEST - FAIL The BMS regularly monitors the integrity of the digital inputs from devices used as interlocks and safeties. If any of those inputs were to "weld" ON, this alarm will be triggered.
> FALSE FLAME This alarm triggers if a flame scanner picks up a flame signal while neither burner is commanded to run.
> MAIN OIL SSV - FAILED TO CLOSE
> MAIN GAS SSV - FAILED TO CLOSE
> MASTER FUEL RELAY - FAILED TO OPEN
> PILOT RELIGHT - 3 FAILURES This alarms triggers if either

pilot fails to light-off within a combined total of 3 attempts, and neither burner is lit at the time of the 3rd failure.
> PILOT SSV - FAILED TO CLOSE

(2) Monitored - Only when Boiler Switch is in RUN

> COMBUSTION CONTROLLER - FAULT This alarm becomes Active 3 seconds after Boiler Switch is in Run and the alarm triggers if the Combustion Controller HC900 is not in RUN mode (e.g., power failure, hardware failure, etc…)
> EMERGENCY STOP - CONTROL BOOTH
> EMERGENCY STOP - LOCAL
> FURNACE PRESSURE - HIGH CUTOUT
> FURNACE PRESSURE - LOW CUTOUT
> INSTRUMENT AIR PRESSURE - LOW CUTOUT
> WATCHDOG TIMER RELAY - FAIL This alarm triggers if the BMS watchdog relay fails (either due to a hardware issue with the BMS HC900 or with the watchdog relay itself)

(3) Monitored - Once Purge is complete

> COMBUSTION AIRFLOW - FAIL This alarm triggers if the "proof of air flow" switch fails to make.
> FD FAN FAIL This alarm triggers if the "FD FAN - STOPPED OUT OF SEQUENCE" alarm becomes active.
> ID FAN FAIL This alarm triggers if the "ID FAN - STOPPED OUT OF SEQUENCE" alarm becomes active.
> FGR FAN FAIL This alarm triggers if the "FGR FAN - STOPPED OUT OF SEQUENCE" alarm becomes active.

(4)Monitored - Once any burner switch is in RUN

> DRUM LEVEL FLOAT - LOW CUTOUT
> DRUM LEVEL PROBE - LOW CUTOUT
> DRUM PRESSURE SWITCH 01 - HIGH CUTOUT
> DRUM PRESSURE SWITCH 02 - HIGH CUTOUT

(5) Monitored - Disabled in this configuration

> LIGHT-OFF - AIRFLOW FAIL
> LIGHT-OFF - WB DAMPER FAIL
> PURGE - AIRFLOW FAIL
> PURGE - ECON BYPASS DAMPER FAIL
> PURGE - ID DAMPER FAIL
> PURGE - WB DAMPER FAIL

b. Burners The following alarms are representative of both Burners 1 and 2. A Burner Lockout only affects the burner experiencing that particular Lockout alarm. The Lockout forces the Burner switch to STOP, and causes that Burner to shutdown.

(1) Monitored - Always

> BURNER OIL SSV - FAILED TO CLOSE
> BURNER GAS SSV - FAILED TO CLOSE
> FALSE FLAME This alarm triggers if the burner flame scanner picks up a flame signal for more than 60 seconds while the burner is off.
> MAIN FLAME FAIL This alarm triggers if the flame fails after

main burner flame has been established.
> MTFI - FLAME FAIL This alarm triggers if the flame fails during MTFI.
> PTFI - FLAME FAIL This alarm triggers if the flame fails during PTFI.
> PILOT HOLD - FLAME FAIL This alarm triggers if the flame fails for 30 seconds while in Pilot Hold.
> PILOT HOLD - TOO LONG This alarm triggers if the Pilot Hold is maintained for more than five-minutes

(2) Monitored - Only during PTFI

> PILOT GAS PRESSURE - HIGH
> PILOT GAS PRESSURE - LOW

(3) Monitored - Only during PTFI and MTFI

> PTFI / MTFI - AIRFLOW FAIL This alarm triggers if the low-fire interlocks fail during PTFI or MTFI.

(4) Monitored - Only during MTFI

> OIL LOW-FIRE - OIL VALVE FAIL This alarm triggers if the oil valve is not in low-fire position during MTFI when oil is the selected fuel.
> GAS LOW-FIRE-GAS VALVE FAIL This alarm triggers if the gas valve is not in the low-fire position during MTFI when gas is the selected fuel.
> Monitored - Starting at MTFI and as long as Main burner is on
> ATOMIZING MEDIA PRESSURE - LOW
> ATOMIZING MEDIA RATIO - LOW
> FUEL OIL PRESSURE - LOW
> OIL GUN - NOT IN POSITION
> GAS PRESSURE - LOW.

3.4.5.14 Notice

This is not so much an alarm as it is an attempt to let the operator know that the boiler startup is "stalled" due to some conditions not happening within a "reasonable" amount of time. Note that these alarms do not abort the boiler startup process.

a. NOTICE - LOW-FIRE CONDITIONS NOT MET This alarm is triggered when the Low-Fire interlocks are not met despite the Low-Fire Request having been active for over five minutes.

b. NOTICE - PURGE CONDITIONS NOT MET This alarm is triggered when the Purge interlocks are not met despite the Purge Request having been active for over 10 minutes.

c. NOTICE - WAITING FOR BURNER START COMMAND This alarm is triggered when no burner has been turned on despite the burner startup sequence having been ready for light-off for over 10 minutes.

3.4.5.15 Process Valve Fault

Process valve fault shall operate as follows.

a. AIR FLOW PROCESS VALUE - LOW ALARM This alarm is triggered if the air flow drops below 2% of the minimum expected air flow while the boiler is online.

b. AIR FLOW ALARM - BURNER HELD AT LOWFIRE - MAINT REQUIRED This alarm is triggered when either "AIR FLOW - ANALOG INPUT FAILURE" and/or "AIR FLOW PROCESS VALUE - LOW ALARM" alarm is active.

c. OIL FLOW PROCESS VALUE - LOW ALARM This alarm is triggered if the oil flow drops below 2% of the minimum expected oil flow while the boiler is online.

d. OIL FLOW ALARM - BURNER HELD AT LOWFIRE - MAINT REQUIRED This alarm is triggered when either "OIL FLOW - ANALOG INPUT FAILURE" and/or "OIL FLOW PROCESS VALUE - LOW ALARM" alarm is active.

e. GAS FLOW PROCESS VALUE - LOW ALARM This alarm is triggered if the natural gas flow drops below 2% of the minimum expected natural gas flow while the boiler is online.

f. GAS FLOW ALARM - BURNER HELD AT LOW FIRE - MAINT REQUIRED This alarm is triggered when either "GAS FLOW - ANALOG INPUT FAILURE" and/or "GAS FLOW PROCESS VALUE - LOW ALARM" alarm is active.

3.4.5.16 Running When Commanded to Stop

This alarm is triggered when the device run contact is made even though the controls system is not giving it a command to run. Some possible scenarios include a "welded" run command relay, a "welded" run contact, or the device is commanded to run from its local motor/VFD cabinet instead of through the controls system.

a. ID FAN - RUNNING WHEN COMMANDED TO STOP
b. FD FAN - RUNNING WHEN COMMANDED TO STOP
c. VFD FAN - RUNNING WHEN COMMANDED TO STOP

3.4.5.17 Stopped Out of Sequence

This alarm is triggered when a device is not running when it is expected to run. Each device has a set of conditions under which it is expected to be running; if during that time, the controls system does not see the run contact being made, it triggers this alarm for the device. The trigger conditions are described for each alarm listed below.

a. ID FAN - STOPPED OUT OF SEQUENCE

b. FD FAN - STOPPED OUT OF SEQUENCE

c. FGR FAN - STOPPED OUT OF SEQUENCE

3.4.5.18 Switch Failure

This alarm is used to verify the proper functioning of the listed mechanical alarm switches by verifying that the mechanical alarm switch triggers before the analog value for that process reaches a certain level. For example, the mechanical Drum Pressure High Switch is mechanically set to trip around 165 psig. If the analog Drum Pressure signal monitored by the controls system reaches 170 psig before the mechanical switch trips, the Switch Failure alarm will be triggered. This

alarm is disabled if the analog input failure alarm is active for that point.

a. SWITCH FAILURE - DRUM LEVEL HIGH PROBE
b. SWITCH FAILURE - DRUM PRESSURE HIGH SWITCH 01
c. SWITCH FAILURE - FURNACE PRESSURE HIGH SWITCH
d. SWITCH FAILURE - FURNACE PRESSURE LOW SWITCH

3.4.5.19 VFD Failure

This alarm indicates that the VFD has an internal fault and/or that it has lost power.

a. FD FAN - VFD FAULT
b. ID FAN - VFD FAULT
c. FGR FAN - VFD FAULT

-- End of Section --

SECTION 23 31 13.00 40

METAL DUCTS
11/12

PART 1 GENERAL

1.1 REFERENCES

The publications listed below form a part of this specification to the extent referenced. The publications are referred to within the text by the basic designation only.

AMERICAN INSTITUTE OF STEEL CONSTRUCTION (AISC)

AISC 325	(2011) Steel Construction Manual
AISC 360	(2010) Specification for Structural Steel Buildings

AMERICAN SOCIETY OF HEATING, REFRIGERATING AND AIR-CONDITIONING ENGINEERS (ASHRAE)

ASHRAE EQUIP IP HDBK	(2012) Handbook, HVAC Systems and Equipment (IP Edition)
ASHRAE FUN IP	(2013; Addenda and Corrigendum 2013) Fundamentals Handbook, I-P Edition

AMERICAN WELDING SOCIETY (AWS)

AWS A5.8/A5.8M	(2011; Amendment 2012) Specification for Filler Metals for Brazing and Braze Welding

ASTM INTERNATIONAL (ASTM)

ASTM A123/A123M	(2013) Standard Specification for Zinc (Hot-Dip Galvanized) Coatings on Iron and Steel Products
ASTM A36/A36M	(2014) Standard Specification for Carbon Structural Steel
ASTM A653/A653M	(2015) Standard Specification for Steel Sheet, Zinc-Coated (Galvanized) or Zinc-Iron Alloy-Coated (Galvannealed) by the Hot-Dip Process
ASTM A924/A924M	(2014) Standard Specification for General Requirements for Steel Sheet, Metallic-Coated by the Hot-Dip Process

NATIONAL FIRE PROTECTION ASSOCIATION (NFPA)

NFPA 90A	(2015) Standard for the Installation of Air Conditioning and Ventilating Systems

SHEET METAL AND AIR CONDITIONING CONTRACTORS' NATIONAL ASSOCIATION (SMACNA)

SMACNA 1966	(2005) HVAC Duct Construction Standards Metal and Flexible, 3rd Edition
SMACNA 1987	(2006) HVAC Duct Systems Inspection Guide, 3rd Edition

SOCIETY OF AUTOMOTIVE ENGINEERS INTERNATIONAL (SAE)

SAE AMS 2480	(2009; Rev H) Phosphate Treatment, Paint, Base

1.2 SUBMITTALS

Government approval is required for submittals with a "G" designation; submittals not having a "G" designation are for Contractor Quality Control approval. Submit the following in accordance with Section 01 33 00 SUBMITTAL PROCEDURES:

SD-01 Preconstruction Submittals

Material, Equipment, and Fixture Lists; G
Records of Existing Conditions; G

SD-02 Shop Drawings

Connection Diagrams; G
Record Drawings; G
Offset Fitting Configurations; G

SD-03 Product Data

Equipment and Performance Data; G
Galvanized Steel Ductwork Materials; G
Brazing Materials; G
Mill-Rolled Reinforcing and Supporting Materials; G
Round Sheet Metal Duct Fittings; G
Turning Vanes; G
Flexible Connectors; G

SD-05 Design Data

Design Analysis and Calculations; G

SD-06 Test Reports

Ductwork Leakage Tests; G

SD-07 Certificates

Listing of Product Installations; G
Galvanized Steel Ductwork Materials; G
Brazing Materials; G
Mill-Rolled Reinforcing and Supporting Materials; G
Round Sheet Metal Duct Fittings; G
Turning Vanes; G

Flexible Connectors; G

1.3 RECORD DRAWINGS

Provide record drawings with current factual information. Include deviations from, and amendments to, the drawings and concealed or visible changes in the work, for medium/high pressure ductwork systems. Label drawings "As-Built".

PART 2 PRODUCTS

Include the manufacturer's style or catalog numbers, specification and drawing reference numbers, warranty information, and fabrication site information within material, equipment, and fixture lists.

2.1 SYSTEM DESCRIPTION

Provide low-pressure systems ductwork and plenums where maximum air velocity is 2,000 feet per minute(fpm) and maximum static pressure is 2 inches water gage (wg), positive or negative.

Submit connection diagrams for low pressure ductwork systems indicating the relation and connection of devices and apparatus by showing the general physical layout of all controls, the interconnection of one system (or portion of system) with another, and internal tubing, wiring, and other devices.

Submit design analysis and calculations for low pressure ductwork systems indicating the manufacturer's recommended air velocities, maximum static pressures, temperature calculations and acoustic levels.

Encompass high velocity systems ductwork where:

a. Minimum air velocity exceeds 2,000 feet per minute (fpm) or static pressure exceeds 2 inches water gage (wg).

b. Medium static pressure ranges from over 2 inches wg through 3 inches wg, positive or negative, or over 3 inches wg through 6 inches wg positive.

c. Do not use rigid fibrous-glass ductwork.

2.1.1 Design Requirements

Submit records of existing conditions including the results of a survey consisting of work area conditions, and features of existing structures and facilities within and adjacent to the jobsite.

Submit equipment and performance data for medium/high pressure ductwork systems consisting of use life, system functional flows, safety features, and mechanical automated details. Submit test response and performance characteristics curves for certified equipment.

Submit design analysis and calculations for medium/high pressure ductwork systems indicating the manufacturer's recommended air velocities, maximum static pressure, and temperature calculations.

2.2 MATERIALS

2.2.1 Galvanized Steel Ductwork Materials

Provide hot-dip galvanized carbon steel ductwork sheet metal of lock-forming quality, with regular spangle-type zinc coating, conforming to ASTM A924/A924M and ASTM A653/A653M, Designation G90. Treat duct surfaces to be painted by apostatizing.

Conform to ASHRAE EQUIP IP HDBK, Chapter 16, ASHRAE FUN IP, Chapter 32 and SMACNA 1966 for sheet metal gages and reinforcement thickness.

Low pressure ductwork minimum standards are:

MINIMUM SHEET METAL GAGE

DUCT WIDTH INCHES	GAGE
0 - 12	26
13 - 30	24
31 - 60	22

2.2.2 Brazing Materials

Provide silicon bronze brazing materials conforming to AWS A5.8/A5.8M.

2.2.3 Mill-Rolled Reinforcing And Supporting Materials

Conform to ASTM A36/A36Mfor mill-rolled structural steel and, wherever in contact with sheet metal ducting galvanize to commercial weight of zinc or coated with materials conforming to ASTM A123/A123M .

In lieu of mill-rolled structural steel, submit for approval equivalent strength, proprietary design, rolled-steel structural support systems.

2.3 COMPONENTS

2.3.1 Round Sheet Metal Duct Fittings

Submit offset fitting configurations for approval. Shop fabricate fittings.

2.3.1.1 Fittings Construction

Manufacture as separate fittings, not as tap collars welded or brazed into duct sections.

Provide two-piece type miter elbows for angles less than 31 degrees, three-piece type for angles 31 through 60 degrees, and five-piece type for angles 61 through 90 degrees. Ensure centerline radius of elbows is 1-1/2 times fitting cross section diameter.

Provide conical type crosses, increasers, reducers, reducing tees, and 90-degree tees.

Ensure cutouts in fitting body are equal to branch tap dimension or, where smaller, excess material is flared and rolled into smooth radius nozzle configuration.

2.3.2 Reinforcement

Support inner liners of both duct and fittings by metal spacers welded in position to maintain spacing and concentricity.

2.3.3 Fittings

Submit offset fitting configurations for approval.

Make divided flow fittings as separate fittings, not tap collars into duct sections, with the following construction requirements:

a. Sound, airtight, continuous welds at intersection of fitting body and tap

b. Tap liner securely welded to inner liner, with weld spacing not to exceed 3 inches

c. Pack insulation around the branch tap area for complete cavity filling.

d. Carefully fit branch connection to cutout openings in inner liner without spaces for air erosion of insulation and without sharp projections that cause noise and airflow disturbance.

Continuously braze seams in the pressure shell of fittings. Protect galvanized areas that have been damaged by welding with manufacturer's standard corrosion-resistant coating.

Construct two-piece type elbows for angles through 35 degrees, three-piece type for angles 36 through 71 degrees, and five-piece type for angles 72 through 90 degrees.

Provide conical type crosses, increasers, reducers, reducing tees, and 90-degree tees.

2.3.4 Turning Vanes

Provide double-wall type turning vanes, commercially manufactured for high-velocity system service.

2.3.5 Flexible Connectors For Sheet Metal

Use UL listed connectors, 30-ounce per square yard, waterproof, fire-retardant, airtight, woven fibrous-glass cloth, double coated with chloroprene. Clear width, not including clamping section, is 6 to 8 inches.

2.3.6 Duct Hangers

For duct hangers in contact with galvanized duct surfaces, provide galvanized steel painted with inorganic zinc.

2.3.7 Mill-Rolled Reinforcing And Supporting Materials

Provide mill-rolled structural steel conforming to ASTM A36/A36M. Whenever in contact with sheet metal ducting, provide galvanized steel in accordance with ASTM A123/A123M.

In lieu of mill-rolled structural steel, submit equivalent strength,

proprietary-design, rolled-steel structural support systems for approval.

PART 3 EXECUTION

3.1 PREPARATION

For sheet metal surfaces to be painted, and surfaces to which adhesives are to be applied, clean surface of oil, grease, and deleterious substances.

Ensure strength is adequate to prevent failure under service pressure or vacuum created by fast closure of duct devices. Provide leaktight, automatic relief devices.

3.1.1 Construction Standards

Provide sheet metal construction in accordance with the recommendations for best practices in ASHRAE EQUIP IP HDBK, Chapter 16, SMACNA 1966, NFPA 90A, and ASHRAE FUN IP, Chapter 32.

Design and fabricate supplementary steel in accordance with AISC 360 and AISC 325.

Where construction methods for certain items are not described in the referenced standards or herein, perform the work in accordance with recommendations for best practice defined in ASHRAE EQUIP IP HDBK.

3.2 INSTALLATION

When furnishing the listing of product installations for medium/high pressure ductwork systems include identification of at least 5 units, similar to those proposed for use, that have been in successful service for a minimum period of 5 years. Include purchaser, address of installation, service organization, and date of installation.

Fabricate airtight and include reinforcements, bracing, supports, framing, gasketing, sealing, and fastening to provide rigid construction and freedom from vibration, airflow-induced motion and noise, and excessive deflection at specified maximum system air pressure and velocity.

Provide offsets and transformations as required to avoid interference with the building construction, piping, or equipment.

Make plenum anchorage provisions, sheet metal joints, and other areas airtight and watertight by caulking mating galvanized steel and concrete surfaces with a two-component elastomer.

3.2.1 Jointing

Provide outside air-intake ducts and plenums made from sheet metal with soldered watertight joints.

3.2.2 Ducts

Wherever ducts pass through firewalls or through walls or floors dividing conditioned spaces from unconditioned spaces, provide a flanged segment in that surface during surface construction.

3.3 APPLICATION

3.3.1 Low Pressure Sheet Metal Ducts

Weld angle iron frames at corners and ends, whenever possible. Rivet or weld angle iron reinforcements to ducts not more than 6 inches on center, with not less than two points of attachment. Spot welding, where used, is 3 inches on center.

Seal standard seam joints with an elastomer compound to comply with SMACNA 1966 Seal Class A, B or C as applicable.

Limit crossbreaking to 4 feet and provide on all ducts 8 inches wide and wider. Provide bead reinforcement in lieu of crossbreaking where panel popping may occur. Where rigid insulation is applied, crossbreaking is not required.

3.3.1.1 Longitudinal Duct Seams

Provide Pittsburgh lock corner seams.

3.3.1.2 Joints and Gaskets

Bolt companion angle flanges together with 1/4 inch diameter bolts and nuts spaced 6 inches on center. Gasket flanged joints with chloroprene full-face gaskets 1/8 inch thick, with Shore A 40 durometer hardness. Use one piece gaskets, vulcanized at joints.

3.3.1.3 Square Elbows

Provide single-vane duct turns in accordance with SMACNA 1966, use on ducts 12 inches in width and narrower.

3.3.1.4 Radius Elbows

Conform to SMACNA 1966 for radius elbows. Provide an inside radius equal to the width of the duct. Where installation conditions preclude use of standard elbows, the inside radius may be reduced to a minimum of 0.25 times duct width and install turning vanes in accordance with the following schedule.

WIDTH OF ELBOWS INCHES	RADIUS OF TURNING VANES IN PERCENT OF DUCT WIDTH VANE NO. 1	VANE NO. 2	VANE NO. 3
Up to 16	56	--	--
17 to 48	43	73	--
49 and over	37	55	83

Where two elbows are placed together in the same plane in ducts 30 inches wide and larger, continue the guide vanes through both elbows rather than spaced in accordance with above schedule.

3.3.1.5 Outlets, Inlets, And Duct Branches

Install branches, inlets, and outlets so that air turbulence is reduced to a minimum and air volume properly apportioned.

Where a duct branch is to handle more than 25 percent of the air handled by the duct main, use a complete 90-degree increasing elbow with an inside radius of 0.75 times branch duct width. Size of the leading end of the increasing elbow within the main duct with the same ratio to the main duct size as the ratio of the related air quantities handled.

Where a duct branch is to handle 25 percent or less of the air handled by the duct main, construct the branch connection with a 45 degree side take-off entry in accordance with SMACNA 1966.

3.3.1.6 Duct Transitions

Where the shape of a duct changes, ensure the angle of the side of the transition piece does not exceed 15 degrees from the straight run of duct connected thereto.

Where equipment is installed in ductwork, ensure the angle of the side of the transition piece from the straight run of duct connected thereto does not exceed 15 degrees on the upstream side of the equipment and 22-1/2 degrees on the downstream side of the equipment.

3.3.1.7 Branch Connections

Construct radius tap-ins in accordance with SMACNA 1966.

3.3.1.8 Access Openings

Construct access door in accordance with SMACNA 1966, except that sliding doors may be used only for special conditions upon prior approval. Provide double-panel type doors.

Install access doors and panels in ductwork at any item requiring periodic inspection, adjustment, maintenance, or cleaning.

Minimum access opening size is 12 by 18 inches, unless precluded by duct dimensions or otherwise indicated.

Make airtight access doors that leak by adding or replacing hinges and latches or by construction of new doors adequately reinforced, hinged, and latched.

3.3.1.9 Flexible Connectors For Sheet Metal

Connect air handling equipment, ducts crossing building expansion joints, and fan inlets and outlets to upstream and downstream components by treated woven-cloth connectors.

Install connectors only after system fans are operative, and vibration isolation mountings have been adjusted. When system fans are operating, ensure connectors are free of wrinkle caused by misalignment or fan reaction. Width of surface is curvilinear.

3.3.2 Rectangular Sheet Metal Ducts

3.3.2.1 Medium-Pressure Gages, Joints, And Reinforcement

Ensure minimum sheet metal gages, joints, and reinforcements between joints are in accordance with ASHRAE EQUIP IP HDBK, Chapter 16,

ASHRAE FUN IP, Chapter 32 and SMACNA 1966.

Ensure sheet metal minimum thickness, transverse reinforcement between joints, and joints of ducts are in accordance with the following:

LONGEST SIDE INCHES	SHEET METAL GAGE ALL SIDES	COMPANION ANGLE INCHES	REINFORCEMENT ANGLES INCHES, 24 INCHES ON CENTER MAXIMUM (BACK TO BACK)
97 to 108	16	2 by 2 by 1/8, two tie rods along angle	Two 2 by 2 by 1/8, two tie rods along angle
109 to 132	16	2 by 2 by 3/16, two tie rods along angle	Two 2 by 2 by 3/16, two tie rods along angle
133 and longer	14	2 by 2 by 3/16, with tie rods every 48 inches	Two 2 by 2 by 3/16, with tie rods every 48 inches

3.3.2.2 Medium- And High-Pressure Branches, Inlets, Outlets

Install branches, inlets, and outlets to minimize air turbulence and to ensure proper airflow.

Provide commercially manufactured air extractors to allow adjustment of the air quantity and to provide an even flow of air across the device or duct served.

3.3.2.3 Duct Branch Transition

Where a duct branch handles over 25 percent of the air transported by the duct main, use a complete 90-degree increasing, with an inside radius of 0.75 times duct branch width. Ensure the size of the trailing end of the increasing elbow within the main duct is in the same ratio to the main duct size as the ratio of the relative air quantities handled.

Where a duct branch is to handle 25 percent or less of the air handled by the duct main, provide a branch connection with an inside radius of 0.75 times branch duct width, a minimum arc length of 45 degrees, and an outside radius of 1.75 times duct branch width. Place arc tangent to duct main.

3.3.3 Round Sheet Metal Ducts

3.3.3.1 Duct Gages And Reinforcement

Sheet metal minimum thickness, joints, and reinforcement between joints shall be in accordance with ASHRAE EQUIP IP HDBK, Chapter 16, ASHRAE FUN IP, Chapter 32 and SMACNA 1966.

Provide ducts with supplemental girth angle supports, riveted with tack welded to duct. Locate girth angles as follows:

DIAMETER, INCHES	REINFORCEMENT-MAXIMUM SPACING, INCHES
25 to 36	1-1/4 by 1-1/4, 1/8 thick, 72 inches on center
37 to 50	1-1/4 by 1-1/4, 1/8 thick, 60 inches on center
51 to 60	1-1/2 by 1-1/2, 1/8 thick, 48 inches on center

Bolt heads and nuts shall be hex-shaped, 5/16 inch diameter for ducts up to 50 inch diameter, and 3/8 inch diameter for 51 inch diameter ducts and larger.

Continuously weld flanges to duct on outside of duct and intermittently welded with 1 inch welds every4 inches on inside joint face. Remove excess filler metal from inside face. Protect galvanized areas that have been damaged by welding with manufacturer's standard corrosion-resistant coating.

3.3.3.2 Duct Joints

Provide duct joints manufactured by machine, with spiral locksets to and including 60 inch diameters, and to dimensional tolerances compatible with fittings provided. Draw band girth joints are not acceptable.

Prepare slip joints by coating the male fitting with elastomer sealing materials, exercising care to prevent mastic from entering fitting bore, leaving only a thin annular mastic line exposed internally. Use sheet metal screws to make assembly rigid, not less than four screws per joint, maximum spacing 6 inches. Do not use pop rivets. Tape and heat seal all joints.

3.3.3.3 Duct Transitions

Where the shape of a duct changes, ensure the angle of the side of the transition piece does not exceed 15 degrees from the straight run of duct connected thereto.

Where equipment is installed in ductwork, ensure the angle of the side of the transition piece from the straight run of duct connected thereto does not exceed 15 degrees on the upstream side of the equipment and 22-1/2 degrees on the downstream side of the equipment.

3.3.4 Transverse Reinforcement Joints

Provide transverse reinforcements that are spot welded 4 inches on center. Weld transverse reinforcement to form continuous frames.

3.3.5 Joint Gaskets

Gasket flanged joints with chloroprene full-face gaskets 1/8 inch thick, Shore A 40 durometer hardness. Use one-piece gaskets, vulcanized at joints.

3.3.6 Radius Elbows

Fabricate elbow proportions and radius elbows in accordance with ASHRAE EQUIP IP HDBK, Chapter 16, ASHRAE FUN IP, Chapter 32 and SMACNA 1966.

3.3.7 Plenum Connections

Ensure round duct connections are welded joint bellmouth type.

Ensure rectangular duct connections are bellmouth type, constructed in accordance with ASHRAE EQUIP IP HDBK, Chapter 16, ASHRAE FUN IP, Chapter 32 and SMACNA 1966.

3.3.8 Access Openings

Minimum size of access opening is 12 by 18 inches, unless precluded by duct dimension.

Frame access openings with welded and ground miter joints, 1/8 inch thick strap steel , with 1/4 inch studs welded to frame. Ensure cover plates are not less than constructed of 12-gage metal.

In lieu of access doors, use readily accessible flanged duct sections upon approval. Provide stable hanger supports for disconnected duct terminal.

3.3.9 Duct Supports

Install duct support in accordance with ASHRAE EQUIP IP HDBK, Chapter 16, ASHRAE FUN IP, Chapter 32 and SMACNA 1966. Meet the minimum size for duct hangers as specified in ASHRAE EQUIP IP HDBK, Chapter 16, ASHRAE FUN IP, Chapter 32 and SMACNA 1966. Provide two hangers where necessary to eliminate sway. Support attachment to duct surfaces by welding 4 inches on center.

Take the following into account in selection of a hanging system:

a. Location and precedence of work under other sections

b. Interferences of various piping and electrical conduit

c. Equipment,and building configuration

d. Structural and safety factor requirements

e. Vibration, and imposed loads under normal and abnormal service conditions

Support sizes, configurations, and spacing are given to show the minimal type of supporting components required. If installed loads are excessive for the specified hanger spacing, hangers, and accessories reduce hanger spacing. After system startup, replace any duct support device which, due to length, configuration, or size, vibrates or causes possible failure of a member, or the condition otherwise be alleviated. Exercise special care to preclude cascade-type failures.

Do not hang ductwork and equipment from roof deck, piping, or other ducts or equipment. Maximum span between any two points is 10 feet, with lesser spans as required by duct assemblies, interferences, and permitted loads imposed.

Where support from metal deck systems is involved, coordinate support requirements with installation of metal deck.

3.3.9.1 Hangars

Attach hanger rods, angles, and straps to beam clamps. Receive approval from the Contracting Officer for concrete inserts, masonry anchors, and fasteners for the application.

Hardened high-carbon spring-steel fasteners fitted onto beams and miscellaneous structural steel are acceptable upon prior approval of each proposed application and upon field demonstration of conformance to specification requirements. Make fasteners from steel conforming to AISI Type 1055 , treated and finished in conformance with SAE AMS 2480, Type Z (zinc phosphate base), Class 2 (supplementary treatment). Verify a 72-hour load-carrying capacity by a certified independent laboratory.

Where ductwork system contains heavy equipment, excluding air-diffusion devices and single-leaf dampers, hang such equipment independently of the ductwork by means of rods or angles of sizes adequate to support the load.

Sufficiently cross-brace hangers to eliminate swaying both vertically and laterally.

3.3.9.2 Installation

Ensure hanger spacing gives a 20-to-1 safety factor for supported load.

Maximum load supported by any two fasteners is 100 pounds.

Install hangers on both sides of all duct turns, branch fittings, and transitions.

Friction rod assemblies are not acceptable.

3.3.9.3 Strap-type Hangars

Support rectangular ducts up to 36 inches by strap-type hangers attached at not less than three places to not less than two duct surfaces in different planes.

Perforated strap hangers are not acceptable.

3.3.9.4 Trapeze Hangars

Support rectangular ducting, 36 inches and larger, by trapeze hangers. Support ducts situated in unconditioned areas and required to have insulation with a vapor-sealed facing on trapeze hangers. Space hangers far enough out from the side of the duct to permit the duct insulation to be placed on the duct inside the trapeze. Do not penetrate the vapor-sealed facing with duct hangers.

Where trapeze hangers are used, support the bottom of the duct on angles sized as follows:

WIDTH OF DUCT, INCHES	MINIMUM BOTTOM ANGLE SIZE, INCHES
30 and smaller	1-1/4 by 1-1/4 by 1/8

WIDTH OF DUCT, INCHES	MINIMUM BOTTOM ANGLE SIZE, INCHES
31 to 48	1-1/2 by 1-1/2 by 1/8
49 to 72	1-1/2 by 1-1/2 by 3/16
73 to 96	2 by 2 by 1/4
97 and wider	3 by 3 by 1/4

3.3.9.5 Purlins

Do not support ducting, when supported from roof purlins, at points greater than one-sixth of the purlin span from the roof truss. Do not exceed 400 pounds load per hanger when support is from a single purlin or 800 pounds when hanger load is applied halfway between purlins by means of auxiliary support steel provided under this section. When support is not halfway between purlins, the allowable hanger load is the product of 400 times the inverse ratio of the longest distance of purlin-to-purlin spacing.

When the hanger load exceeds the above limits, provide reinforcing of purlin(s) or additional support beam(s). When an additional beam is used, have the beam bear on the top chord of the roof trusses, and also bear over the gusset plates of top chord. Stabilize the beam by connection to roof purlin along bottom flange.

Purlins used for supporting fire-protection sprinkler mains, electrical lighting fixtures, electrical power ducts, or cable trays are considered fully loaded. Provide supplemental reinforcing or auxiliary support steel for these purlins.

3.3.10 Flexible Connectors For Steel Metal

Connect air-handling equipment, ducts crossing building expansion joints, and fan inlets and outlets to upstream and downstream components by treated woven-cloth connectors.

Install connectors only after system fans are operative and all vibration isolation mountings have been adjusted. When system fans are operating, ensure connectors are free of wrinkles caused by misalignment or fan reaction. Width of surface is curvilinear.

3.3.11 Insulation Protection Angles

Provide galvanized 20-gage sheet, formed into an angle with a 2 inch exposed long leg with a 3/8 inch stiffening break at outer edge, and with a variable concealed leg, depending upon insulation thickness.

Install angles over all insulation edges terminating by butting against a wall, floor foundation, frame, and similar construction. Fasten angles in place with blind rivets through the protection angle, insulation, and sheet metal duct or plenum. Install angles after final insulation covering has been applied.

3.3.12 Duct Probe Access

Provide holes with neat patches, threaded plugs, or threaded or twist-on

caps for air-balancing pitot tube access. Provide extended-neck fittings where probe access area is insulated.

3.3.13 Openings In Roofs And Walls

Building openings are fixed and provide equipment to suit.

3.4 FIELD QUALITY CONTROL

3.4.1 Ductwork Leakage Tests

Conduct complete leakage test of new ductwork in accordance with Section 23 09 13 INSTRUMENTATION AND CONTROL DEVICES FOR HVAC. Perform tests prior to installing ductwork insulation.

3.4.2 Inspection

Inspect ductwork in accordance with SMACNA 1987.

3.5 DUCTWORK CLEANING PROVISIONS

Protect open ducting from construction dust and debris in a manner approved by the Contracting Officer. Clean dirty assembled ducting by subjecting all main and branch interior surfaces to airstreams moving at velocities two times specified working velocities, at static pressures within maximum ratings. This may be accomplished by: filter-equipped portable blowers which remain the Contractor's property; wheel-mounted, compressed-air operated perimeter lances which direct the compressed air and which are pulled in the direction of normal airflow; or other means approved by the Contracting Officer. Use water- and oil- free compressed air for cleaning ducting. After construction is complete, and prior to acceptance of the work, remove construction dust and debris from exterior surfaces. Clean in conformance with SMACNA 1987.

-- End of Section --

SECTION 23 52 33.03 20

WATER-TUBE BOILERS, OIL/GAS OR OIL
11/08

PART 1 GENERAL

1.1 REFERENCES

The publications listed below form a part of this specification to the extent referenced. The publications are referred to within the text by the basic designation only.

AMERICAN BOILER MANUFACTURERS ASSOCIATION (ABMA/BOIL)

ABMA Boiler 103	(2001) Selected Codes and Standards of the Boiler Industry

AMERICAN INSTITUTE OF STEEL CONSTRUCTION (AISC)

AISC 360	(2010) Specification for Structural Steel Buildings

AMERICAN PETROLEUM INSTITUTE (API)

API Std 607	(2010) Testing of Valves: Fire Test for Soft-Seated Quarter-Turn Valves

AMERICAN WATER WORKS ASSOCIATION (AWWA)

AWWA C651	(2014) Standard for Disinfecting Water Mains

AMERICAN WELDING SOCIETY (AWS)

AWS D1.1/D1.1M	(2015) Structural Welding Code - Steel
AWS D1.3/D1.3M	(2008; Errata 2008) Structural Welding Code - Sheet Steel

ASME INTERNATIONAL (ASME)

ASME A13.1	(2007; R 2013) Scheme for the Identification of Piping Systems
ASME B16.11	(2011) Forged Fittings, Socket-Welding and Threaded
ASME B16.21	(2011) Nonmetallic Flat Gaskets for Pipe Flanges
ASME B16.3	(2011) Malleable Iron Threaded Fittings, Classes 150 and 300
ASME B16.34	(2013) Valves - Flanged, Threaded and Welding End
ASME B16.39	(2014) Standard for Malleable Iron

	Threaded Pipe Unions; Classes 150, 250, and 300
ASME B16.5	(2013) Pipe Flanges and Flanged Fittings: NPS 1/2 Through NPS 24 Metric/Inch Standard
ASME B16.9	(2012) Standard for Factory-Made Wrought Steel Buttwelding Fittings
ASME B31.1	(2014; INT 1-47) Power Piping
ASME B31.3	(2012) Process Piping
ASME B40.100	(2013) Pressure Gauges and Gauge Attachments
ASME BPVC SEC I	(2010) BPVC Section I-Rules for Construction of Power Boilers
ASME BPVC SEC II-C	(2010) BPVC Section II-Materials Part C-Specifications for Welding Rods Electrodes and Filler Metals
ASME PTC 4	(2013) Fired Steam Generators

ASTM INTERNATIONAL (ASTM)

ASTM A106/A106M	(2014) Standard Specification for Seamless Carbon Steel Pipe for High-Temperature Service
ASTM A193/A193M	(2015a) Standard Specification for Alloy-Steel and Stainless Steel Bolting Materials for High-Temperature Service and Other Special Purpose Applications
ASTM A194/A194M	(2015a) Standard Specification for Carbon and Alloy Steel Nuts for Bolts for High-Pressure or High-Temperature Service, or Both
ASTM A312/A312M	(2015) Standard Specification for Seamless, Welded, and Heavily Cold Worked Austenitic Stainless Steel Pipes
ASTM A53/A53M	(2012) Standard Specification for Pipe, Steel, Black and Hot-Dipped, Zinc-Coated, Welded and Seamless
ASTM B88	(2014) Standard Specification for Seamless Copper Water Tube
ASTM D396	(2015b) Standard Specification for Fuel Oils
ASTM D5864	(2011) Standard Test Method for Determining Aerobic Aquatic Biodegradation of Lubricants or Their Components

ASTM D6081	(1998; R 2014) Aquatic Toxicity Testing of Lubricants: Sample Preparation and Results Interpretation
ASTM D975	(2015) Standard Specification for Diesel Fuel Oils
ASTM F1120	(1987; R 2015) Standard Specification for Circular Metallic Bellows Type Expansion Joints for Piping Applications
ASTM F1508	(1996; R 2010) Angle Style, Pressure Relief Valves for Steam, Gas, and Liquid Services

FM GLOBAL (FM)

FM DS 12-17	(2001) Watertube Boilers

MANUFACTURERS STANDARDIZATION SOCIETY OF THE VALVE AND FITTINGS INDUSTRY (MSS)

MSS SP-58	(1993; Reaffirmed 2010) Pipe Hangers and Supports - Materials, Design and Manufacture, Selection, Application, and Installation
MSS SP-69	(2003; Notice 2012) Pipe Hangers and Supports - Selection and Application (ANSI Approved American National Standard)

NATIONAL ELECTRICAL MANUFACTURERS ASSOCIATION (NEMA)

NEMA MG 1	(2014) Motors and Generators

NATIONAL FIRE PROTECTION ASSOCIATION (NFPA)

NFPA 54	(2015) National Fuel Gas Code
NFPA 85	(2015; Errata 1 2015) Boiler and Combustion Systems Hazards Code

U.S. ARMY CORPS OF ENGINEERS (USACE)

EM 1110-2-1424	(1999; Change 1-2006; Change 2-2007) Engineering and Design -- Lubricants and Hydraulic Fluids

U.S. DEPARTMENT OF DEFENSE (DOD)

MIL-STD-101	(2014; Rev C) Color Code for Pipelines and for Compressed Gas Cylinders
MIL-T-19646	(1990; Rev A) Thermometer, Gas Actuated, Remote Reading

U.S. GENERAL SERVICES ADMINISTRATION (GSA)

CID A-A-59222	(Basic; Notice 1) Fans, Centrifugal,

	Draft, Forced and Induced
CID A-A-60001	(Rev A) Traps, Steam
FS WW-S-2739	(Basic; Notice 1) Strainers, Sediment: Pipeline, Water, Air, Gas, Oil, or Steam

U.S. NATIONAL ARCHIVES AND RECORDS ADMINISTRATION (NARA)

29 CFR 1910-SUBPART Q	Welding, Cutting, and Brazing

U.S. NAVAL FACILITIES ENGINEERING COMMAND (NAVFAC)

NAVFAC MO 324	(1992) Inspection and Certification of Boilers and Unfired Pressure Vessels

UNDERWRITERS LABORATORIES (UL)

UL 296	(2003; Reprint Jun 2015) Oil Burners
UL 726	(1995; Reprint Oct 2013) Oil-Fired Boiler Assemblies
UL 795	(2011; Reprint Nov 2013) Standard for Commercial-Industrial Gas Heating Equipment

1.2 SYSTEM DESCRIPTION

1.2.1 Design Requirements

1.2.1.1 Boiler Design and Service Conditions

a. Design pressure: 200 psig

b. Operating pressure: 150 psig

c. Steam temperature: 366 degrees F

d. Feedwater temperature: 225 degrees F

e. Site elevation: 32 feet

f. Ambient air temperature:

Minimum: +7 degrees F

Maximum: 102 degrees F

g. Maximum continuous output (steam): 80,000 lb/hr from each boiler.

h. Excess air leaving the boiler: 5 to 10 percent

i. Gas temperature leaving boiler: 450 degrees F

j. Total forced draft fan static pressure: 13 inches WC

k. Gas draft at boiler outlet: 0.5 inches WC

l. Carbon monoxide (CO) flue gas concentration: Below 30 ppm

m. Nitrogen oxide (NOx) conc. in flue gas: Below 30 ppm

n. Boiler thermal efficiency: 85 percent

1.2.1.2 Economizer

a. Design pressure: 200 psig

b. Operating pressure: 175 psig

c. Fuel (Primary) Natural Gas No.: 2. Fuel Oil (Secondary)

d. Specific heat of the flue gas: 0.24 Btu/lb-degree F

e. Feedwater flow: 195 gpm

f. Flue gas temperature entering economizer: 450 degrees F

g. Flue gas temperature leaving economizer: 290 degrees F

h. Feedwater temperature entering economizer: 225 degrees F

i. Feedwater temperature leaving economizer: 274 degrees F

j. Maximum pressure drop, economizer gas side: 1.5 in. WC

k. Maximum pressure drop, economizer water side: 1.5 psi

l. Fouling factor on feedwater side: 0.001

m. Fouling factor on gas side: 0.001.

1.2.1.3 Burner Systems

For each of the four boilers, provide the following equipment capable of firing both natural gas and #2 fuel oil:

a. Two burner assemblies, each capable of 52,000 SCFH of natural gas and 2695 pounds per hour of liquid fuel (#2 fuel oil, ultra low sulfur diesel fuel or JP5 jet fuel), Each burner shall be capable of firing a total 52 Million BTU (MMBTU) per hour of each fuel in order to provide a 5 percent design allowance above the regulatory operating limit of 99 MMBTU/hr of heat input per boiler. The capacities listed provide an engineering allowance of about 5 percent for each fuel, and are expected to provide for control valve tuning, fuel chemistry variability and unanticipated pressure drops in field piping for each fuel such that full boiler steaming capacity is met without having any control device in its maximum position.

b. A separate burner valve train for each burner; with all necessary shutoff, vent and manual block valves, High Intensity Spark Igniter power source and Flame Scanner signal conditioning unit; as shown in the drawings.

c. One fuel control skid per boiler to regulate and modulate the pilot gas flow, fuel gas flow, fuel oil flow, atomizing medium flow, oil gun purge and other necessary functions as shown in the drawings and to ensure the proper operation of the boiler within NFPA 85 guidelines.

d. Sensors, transmitters and pneumatic actuators as needed to fully automate this burner system. These control elements are to be connected to the terminal strips of the existing control hardware as shown in the drawings.

1.2.1.4 Fans

Provide Forced Draft (FD) and Flue Gas Recirculation (FGR) for each of the four boilers in this Project. Provide Induced Draft (ID) fans for boilers 1 and 2 only. Fan flows and pressures in this Section include 10 percent flow margin and 20 percent head margin. VFD drives shall be provided for each fan motor.

Design FD fan to handle air at temperatures from 7 to 105 degrees F. Fan shall be single width inlet, single width outlet, with clockwise rotation when viewed from the motor end. Fan flow requirement is 31,000 cubic feet per minute (CFM) at a pressure of 13 inches of water gauge. Motors shall be provided by the fan manufacturer and factory-mounted on a common frame with the fan.

Design two ID fans for boilers 1 and 2 to handle air at temperatures from 300 to 450 degrees F. Fans shall be single width inlet, single width outlet, with clockwise rotation fans when viewed from the motor end. Fan flow requirement is 34,000 Cubic Feet per Minute (CFM) at a total pressure rise of 7.2 inches water gauge. Motors to be provided by the fan manufacturer and factory-mounted on a common frame with the fan.

Design four FGR fans to handle air at temperatures from 300 to 450 degrees F. Fan shall be single width inlet, single width outlet, with clockwise rotation fans when viewed from the motor end. Fan flow requirement is 7,000 Cubic Feet per Minute (CFM) at a total pressure rise of 7.2 inches water gauge. Motors to be provided by the fan manufacturer and factory-mounted on a common frame with the fan.

New expansion joints are required on Boiler 1 and 2 in the following locations:

a. Economizer inlet flange.

b. ID fan inlet flange.

c. ID fan outlet flange.

d. FGR fan inlet flange.

e. FGR fan outlet flange.

f. FD fan inlet flange.

g. FD fan outlet flange.

h. Boiler outlet flange.

New expansion joints are required on Boilers 3 and 4 in the following locations:

a. FGR fan inlet flange.

b. FGR fan outlet flange.

c. FD fan outlet flange.

d. FD fan inlet flange.

e. Boiler fresh air duct transition from new ductwork to existing duct connection point.

1.2.1.5 Expansion Joints and Stacks

a. Temperature: Expansion joints shall withstand the temperature of the gas flowing through the duct or fan to which they are attached.

b. Gas Flow at Inlet: Expansion joints shall withstand the flow of the gas flowing through the duct or fan to which they are attached.

c. Flue Gas Acid Dew Point Fuel oil: 235 degrees F

1.2.1.6 Fuel Oil Pumps

a. Pump at three truck unloading stations for #2 fuel oil

(1) Capacity each pump and each steam heater: 350 gpm

(2) Suction lift: 10 ft of water

(3) Discharge pressure at outlet of heater: 75 psig

(4) Maximum pump speed: 1750 rpm

(5) Specific gravity range: 0.82 to 0.90

(6) Viscosity at BHP selection point: 100 ssu

(7) Viscosity range: 60 to 150 ssu

1.2.2 Detail Drawings

1.2.2.1 Boiler

Show arrangement and details of plans, elevations, details for the new fan arrangements, ductwork modifications, new damper installations, new expansion joints, external piping details and schematics, wiring schematics, economizer and economizer structural details. Include insulation details on new flue gas ductwork. Submit descriptive information with the drawings on each item of the drawings.

1.2.2.2 Boiler Room Auxiliary Equipment

Drawings shall show equipment arrangements, wiring and piping diagrams. Include descriptive information for each item shown. Submit drawings showing the following:

a. Condensate receivers (2) shall be replaced, in with new units of equal tank capacity and pumping flow rate, and will include a 6 inch tall pedestal fabricated of structural steel to allow for air circulation

below the receiver tank to keep tank bottom dry and minimize corrosion in that area.

1.2.2.3 Burners

Submit drawings showing the following:

a. General arrangement of fuel skid, burner valve racks and burner installation in the windbox for each boiler.

b. Piping details between the fuel skid and valve racks and between each valve rack and the associated burner.

c. Burner control schematics

d. Flame safety schematics

e. Component details

f. Windbox and Burner Throat modification details

1.2.2.4 Dampers, Stacks, Ductwork, and Breechings

Submit drawings showing the following:

a. General arrangement of flue gas ducts (breeching), economizers and ID fans for boilers 1 and 2.

b. Breeching and ductwork plans and reinforcing details

c. Ductwork and damper hangers and support details

d. Dampers and operators for fresh air inlet, FGR fan outlet and ID fan inlet as shown on the Drawings.

e. Access doors and frames into the ductwork and into boilers 1 and 2 furnace at the new stoker refractory wall.

f. Expansion joints installed as part of this Project.

g. Boiler, Economizer, ID Fans and Stack connection details.

1.2.2.5 Fuel Oil Equipment

Drawings may be manufacturer's standard size for pumps, pump curves, valves, strainers manufacturer's standard size for pumps, pump curves, valves, strainers and pump wiring. Submit drawings showing the following:

a. Certified outline and general arrangement

b. Certified pump curves for new fuel oil unloading pumps.

c. Equipment detail sheets including valves

d. Electrical wiring diagrams

1.2.2.6 Piping and Specialty Items

Drawings may be manufacturer's standard size. Submit drawings showing the following:

a. Details of special valves and fittings

b. Flanged piping connections at new economizers for boilers 1 and 2.

c. All block valves in flammable fluid lines (fuel oil and natural gas) will be firesafe ball valves compliant with API607.

1.2.2.7 Reproducible Drawings

Submit one printed copy and one electronic copy (on CD or DVD media) of each approved drawing sheet to the Contracting Officer for the following items:

a. Burner layout, construction and details including fuel skid, valve rack and burner locations and connections.

b. Fan, ductwork, and damper layout and details

c. Burner control schematics and burner details

d. Wiring diagrams for all power and control circuits.

e. Fuel oil piping and equipment modifications.

f. Automatic flue gas recirculation system.

g. Piping schematics for all piping system modifications.

1.2.3 Design Data

1.2.3.1 Engineering Calculations

Furnish the following calculations from the manufacturer:

a. Foundation (including bearing and moment forces) and anchor bolts for:

(1) Replacement FD Fans for boilers 1, 2, 3 and 4.
(2) Replacement ID Fans for boilers 1 and 2.
(3) New FGR Fans for boilers 1, 2, 3 and 4.
(4) New economizers for boilers 1 and 2.

b. Fan performance requirements (FD, ID and FGR) based on burner equipment selected.

1.2.4 Test Reports

Submit the predicted economizer performance along with and as part of the boiler predicted performance report.

Submit a certified test curve for each fan supplied as part of this Project.

1.2.5 Performance Requirements

1.2.5.1 Boiler

Base performance requirements, including furnace heat release rates, on the following ultimate analysis and high heating values.

a. Fuel Oil Analysis

(1) Grade of fuel oil: #2 and #2 Ultra Low Sulfur Diesel per ASTM D975.

b. Natural gas analysis as provided by Piedmont Natural Gas shall comply with FERC requirements for interstate pipeline quality natural gas.

1.2.5.2 Economizer

The increase in efficiency due to the economizer shall be not less than 4.5 percent at full load. Fully coordinate the economizer with the boiler to which it is to be applied.

The new economizer is to have flanged feedwater nozzles to match the existing feedwater lines to and from the economizer, such that no modification to pressure piping is required for installation of the new economizers on boilers 1 and 2.

1.2.5.3 Oil and Gas Burner/Windbox Package

Total boiler turndown ratio shall not be less than eight to one, when firing fuel oil only and ten to one when firing natural gas only with excess air not over 10 percent at full steam load, and excess air not over 22 percent at 20 percent steam load. Each boiler shall have two burners and each boiler shall be capable of stable operation with only one burner in service, including at maximum turndown (minimum firing rate). Air flow shall be modulated through the VFD driving the FD fan and the FD fan damper. Each burner will have a an air cutoff damper that is closed when the burner is out of service.

1.3 SUBMITTALS

Government approval is required for submittals with a "G" designation; submittals not having a "G" designation are for Contractor Quality Control approval. Submit the following in accordance with Section 01 33 00 SUBMITTAL PROCEDURES:

Submittals required by this section require the approval of the Contracting Officer. Within 60 days after award of the contract, shop drawings accompanied with complete manufacturer's descriptive information shall be submitted for approval as specified in Section 23 03 00.00 20 BASIC MECHANICAL MATERIALS AND METHODS. Drawing size shall be 34 by 22 inches.

SD-02 Shop Drawings

Boiler modifications, including stoker, grate covering and sealing of coal chute connections; G
Boiler Room Auxiliary Equipment; G
Burners; G
Burner Valve Racks; G
Dampers, Stacks, Ductwork, and Breechings; G

Fuel Oil Equipment; G
Piping and Specialty Items; G

Reproducible Drawings (electronic); G

SD-03 Product Data

Insulation Types and Installation Procedures; G

SD-05 Design Data

Engineering Calculations; G

SD-06 Test Reports

Boiler Predicted Performance; G
Economizer Performance; G
Variable Speed Motor Controller and Fan; G

Submit certified copies of design, production and conformance tests for approval before delivery of the equipment.

Hydrostatic and Leak Tightness Tests for new economizers and related flange connections; G
Preliminary Operation; G
General Startup Requirements; G

Boilers and Auxiliaries Tests and Inspections; G

Submit for tests and inspections as specified in the paragraph FIELD QUALITY CONTROL. Submit a detailed written record of test conditions, test procedures, field data, and startup and operational performance of entire heating plant to the Contracting Officer before the Contractor's operational and test personnel leave the site.

SD-07 Certificates

Compatibility of Boiler Components and Equipment; G
System and Equipment Installation; G

Submit the required information and experience certificates as specified under the paragraph EXPERIENCE REQUIREMENTS, within 30 days after award and prior to commencing work on the site.

Identical Equipment; G

SD-10 Operation and Maintenance Data

Boiler, Data Package 3; G

Submit in accordance with Section 01 78 23 OPERATION AND MAINTENANCE DATA. Include the following supplemental information in addition to the requirements of Section 23 03 00.00 20 BASIC MECHANICAL MATERIALS AND METHODS.

a. Illustrations, catalog information, shop drawings, and

certified drawings of each item of equipment and control components

b. Tests and Test Results

c. Adjustments

d. Fan and Blower Characteristics Curves

e. Pump Characteristic Curves

f. Boiler Predicted Performance Data with the new burners

g. List of Special Tools Required

h. Posted Operating Instructions

i. Controls Drawings, Setup and Calibration Data

SD-11 Closeout Submittals

Energy Efficient Equipment for Boilers; G

Contractor Drawing Markups; G

1.4 QUALITY ASSURANCE

1.4.1 Experience

1.4.1.1 Experience Requirements

The new auxiliary equipment installed, within, or as a part of the heating plant, shall be of a proven design; the manufacturer shall be regularly employed in designing, fabricating, erecting, testing and startup of the equipment.

1.4.2 Responsibility of the Boiler Manufacturer

Contractor shall ensure that the manufacturers of boiler components and auxiliaries provide equipment compatible with the boiler. Equipment includes but is not limited to the following: Burner/windbox package, combustion control system, emission control components, fans, economizer, refractories, insulation, sootblowers, breeching between boiler outlet and stack inlet, boiler trim, safety valves and drains.

1.4.3 Standard Commercial Product

Equipment shall be manufactured in accordance with the requirements of this specification and shall be the manufacturer's standard commercial product. Additional or higher quality features which are not specifically prohibited by this specification, but which are a part of the manufacturers' standard commercial product, shall be included in the boilers and equipment being provided. A standard commercial product is a product which has been sold or is being currently offered for sale on the commercial market through advertisements or manufacturer's catalogs, or brochures, and represents the latest production model.

1.4.4 Assembly of Components

The equipment shall be factory assembled to the maximum extent to facilitate erection and minimize field labor.

1.4.5 Certificates

1.4.5.1 Compatibility of Boiler Components and Equipment

Contractor shall submit certifications from the burner manufacturer stating that the burner is compatible with all the existing boilers.

1.4.5.2 System and Equipment Installation

Contractor shall submit written certification from each system supplier and each manufacturer of the equipment that the system and equipment installation is in accordance with the system supplier's and equipment manufacturer's instructions and recommendations, that the unit or system has been run, rotating parts have been dynamically balanced, fluid (including air) flows have been balanced, instrumentation and controls are properly functioning, adjusted and have been calibrated, and the equipment or system is ready for final testing. Certificates shall be submitted before the entire boiler plant may be given an acceptance test.

1.4.5.3 Identical Equipment

Contractor shall submit evidence from the equipment manufacturer to show that substantially identical equipment produced by the manufacturer and of comparable operating parameters (within plus or minus 20 percent) has been successfully installed and operated in not less than two installations under comparable operating conditions for a period of not less than five years.

1.5 DELIVERY, STORAGE, AND HANDLING

Each assembly of components packaged as a unit shall be of a size that can be transported by common carrier without disassembly insofar as shipping clearances are concerned.

1.6 ENVIRONMENTAL REQUIREMENTS

1.6.1 Burner Emission Requirements

The emission requirements shall be met at the maximum required continuous output. The burner shall meet environmental rules and regulations. Emission requirements to be considered are oxides of nitrogen (NOx), opacity, particulate, and carbon monoxide. Other emission requirements may be imposed.

1.6.1.1 NOx Emission Regulations

Compliance shall be met using a combination of the following:

a. Low NOx burners

b. Flue gas recirculation equipment which conforms to UL 795

1.6.1.2 Aquatic Toxicity

Assess potential effects of all lubricants on aquatic organisms in accordance with ASTM D6081 and submit aquatic toxicity reports. Assess biodegradation in accordance with ASTM D5864. In accordance with EM 1110-2-1424 Chapter 8, aquatic toxicity shall exceed 1,000 ppm at LL50 and biodegradation shall exceed 60 percent conversion of carbon to carbon dioxide in 28 days.

PART 2 PRODUCTS

2.1 PRODUCT SUSTAINABILITY CRITERIA

For products in this section, where applicable and to extent allowed by performance criteria, provide and document the following:

2.1.1 Energy Efficient Equipment for Boilers

Provide equipment meeting the efficiency requirements as stated within this section and provide documentation.

2.2 MATERIALS

Provide materials free of defects which could adversely affect the performance or maintainability of individual components or of the overall assembly. Materials not specified herein shall be of the same quality used for the intended purpose in commercial practice. Unless specified otherwise herein, equipment, material, and articles incorporated in the work covered by this specification shall be new.

2.2.1 Identical Equipment

Provide physically and mechanically identical equipment of the same classification size or capacity to permit the interchangeability of replacement parts. This requirement includes parts, assemblies, components, and accessories. Parts provided on the same type unit regardless of unit size and identifiable by identical part number shall be functionally and dimensionally interchangeable. No deviation is acceptable without prior written approval of the Contracting Officer.

2.3 BOILERS

2.3.1 Furnace

The existing furnace grates in boilers 1 and 2 are to be covered with two layers of firebrick, each layer to be 1/2 height and all joints are to be staggered.

The existing stoker coal chutes are to be disconnected, the spreader equipment removed and the remaining openings into the furnace covered with steel plate 3/16 inch thick and sealed. The two center spreader stoker openings are to have removable plates bolted to the burner front to provide access into the furnace for maintenance and annual inspection. See drawings for plate and refractory wall opening details.

Inside the existing stoker front wall, a new refractory wall is to be constructed from the top of the grate surface to the refractory already surrounding the front wall lower header and sealing to each side wall. The materials and dimensions for this refractory wall are shown in the

drawings. Two openings are to be included in this wall, aligned with the removable plates covering the center spreader stoker openings. These openings are to be filled with dry laid (stacked for hand removal) firebrick to insulate the removable plates from the furnace heat while providing access to the furnace interior for maintenance and inspection.

Overfire air fan tuyeres are to be welded closed with steel plate of at least 3/16 inch thickness. Ash reinjection ports are to be welded closed with steel plate of at least 3/16 inch thickness.

2.3.2 Access and Observation Doors

Provide ductwork with sufficient number of access doors and observation doors, to give free and easy access and observation to the new economizer. Requirements for access into the firebox as specified in this Section and shown on the Drawings.

2.3.3 Transition

Provide a transition -duct with expansion joint to permit adapting the boiler to the economizer inlet.

Provide a transition duct with expansion joint to permit adapting the economizer outlet to the ID fan inlet.

Provide a transition duct with expansion joint to permit adapting the ID fan outlet to the stack. Design transition pieces for discharge as shown on drawings.

2.3.4 Combustion Controls

The Plant Control System and existing Burner Management Systems were provided by AC Technical Services in the recent past and will be retained. The burner management system configurations are proprietary to AC Technical Services.

2.3.4.1 Combustion Controls Demolition

Contractor shall disconnect all control circuits being removed from service from the control circuit terminal strips located in the control cabinets. The control terminal strips, all computer hardware, networking equipment and software are to remain in service and are not be be demolished.

2.3.4.2 Combustion Controls New Work

The contractor is to connect new field devices, including sensors actuators and alarms, to the existing control panel terminal strips as shown on the drawings. The contractor is responsible for making any changes to the software or configuration of the control system(s) in this project.

The burner manufacturer is to submit to the contractor and government, the specific burner function sequences required for proper operation of their equipment. Once this submittal is accepted, the contractor is responsible for integration of the burner manufacturer's function sequence into the existing software configuration and for ensuring the updated BMS

configuration meets all applicable safety codes and functional requirements for proper operation of the boiler.

2.4 ECONOMIZERS

Provide a modular unit constructed in accordance with the ASME Boiler and Pressure Vessel Code, Section 1, of one of the following types:

a. Finned or Spiral Wound Tube Type: Feedwater circulates through finned tubes and flue gas flows through outer shell.

2.4.1 Construction

Provide manufacturer's standard economizer design for the operating conditions and the fuel(s) specified. Coordinate the amount of heating surface with the flue gas conditions exiting the boiler or boilers on which the economizer is to be applied to preclude reaching the "acid dew point" for the fuels specified. Provide casing of not less than 7 gage steel plate reinforced as required with support lugs and breeching flanges. Provide building framing steel to support the economizer. Design the economizer so that internal construction can be easily cleaned and inspected.

Provide water connection flanges to match to the existing plant feedwater flanges, such that no welding is required on existing water side pressure parts.

Provide a drain valve downstream of the economizer before the water outlet flange.

2.4.2 Equipment

Provide the following equipment for each unit:

a. Relief valve.

b. Existing shutoff and bypass valves shall be retained and reused.

c. Temperature indicator and transmitter on feedwater outlet.

d. Temperature indicator and transmitter on feedwater inlet.

e. Temperature indicator and transmitter on flue gas outlet.

f. Temperature indicator and transmitter on flue gas inlet.

g. Temperature transmitters shall be connected to the existing Boiler Management System control panels, to the terminals indicated on the Drawings and the existing software shall be present the temperature alarm points to the operators.

h. Differential pressure indicator on water side.

i. Differential pressure indicator on gas side.

j. Pressure gages on feedwater inlet and outlet.

2.4.3 Insulation

Insulate the economizer with not less than the equivalent of 2 inches of mineral wool insulation and lag with not less than 27 gage galvanized, weatherproof lagging.

2.5 BURNER AND WINDBOX PACKAGES

2.5.1 Oil and Gas Burner/Fuel Skid Package

Provide, fully modulating, dual fuel burner systems connected to the existing Combustion control systems. These burner systems are to be installed by AC Technical Services. Provide two burners to be installed in the existing windbox of each boiler, with new burner air cutoff dampers, fuel train and associated controls to comprise a complete factory assembled package. New interconnecting piping, controls, and cables shall be provided and installed.

Each burner assembly shall consist of:

a. Burner body with an automated on/off air damper, so the burner can be taken out of service with the other burner continuing to operate.

b. Gas distribution, mixing system and combustion system,

c. Fuel oil gun with atomizer capable of using either compressed air or steam as the atomizing fluid. The gun assembly shall be provided with a pneumatic retraction mechanism to pull the gun tip away from direct radiant energy in the boiler flame when the oil gun is out of service. This feature is to allow the oil gun to remain installed in the burner when fuel oil is not being burned and prevent coking or overheating of the oil gun tip.

d. An igniter system using either a high intensity spark capable of direct ignition of natural gas and fuel oil, or an igniter system using a spark to ignite a pilot gas flame (natural gas or propane), which is then capable of igniting the main gas or fuel oil burner.

e. A flame scanner system capable of detecting flames of natural gas with significant ultraviolet wavelength radiation and #2 fuel oil with significant infrared wavelength radiation. The scanner(s) must be capable of reliably detecting flame in each of these frequency domains.

f. A separately mounted valve assembly that allows the burner to be started and stopped independently of the other burner mounted on the boiler. The valve assembly shall vent the gas line (and igniter gas line, if used) up through the building roof in accordance with NFPA requirements.

Total heat input to the boiler furnace shall be provided by 2 burners per boiler for a total heat input of 99 million BTU per hour per boiler for each fuel type. Burner package shall be considered an integral part of the steam generator and shall be subject to applicable provisions of the boiler design and service together with requirement of tests, performance guarantees and other warranties specified for the boiler.

2.5.1.1 Burner

a. Burner Characteristics: The burners shall be quiet in operation and

shall operate with a balanced clean stable flame for each fuel, so as not to localize heat in any part of the combustion chamber. The burner shall be capable of completely atomizing and effectively mixing the oil with combustion air so as to insure complete combustion. The air admitted shall be of sufficient quantity for complete combustion, but not of such quantity as to produce an undue percentage of excess air with attendant high stack loss. The oil burner shall operate without clogging or failure, and shall have sufficient capacity to develop not less than the specified capacity. The burner unit shall be easily removed from firing position and readily accessible for inspection, cleaning, and other purposes. Provide adequate observation ports on burner. There shall be no flame impingement on the sidewalls, top, bottom or rear walls of the furnace. Contractor shall install refractory throat tiles or other items provided by the burner manufacturer which may be required for proper installation of the burner.

b. Atomization: Burner shall be steam atomizing; steam pressure at header is 100 psig(saturated); steam temperature at header is 338 degree F (reference). Burner shall also be capable of air atomizing; filtered compressed air shall be available for burner atomization and the maximum requirement for each burner shall not exceed 150 L/s scfm of air at 80 kPa (gage) psig. Provide pressure reducing valve and controls as required.

c. Natural Gas Pilot Ignition System: Provide a complete interrupted type natural gas-fired, spark ignited pilot system for each burner assembly. Combustion air supply shall be from the burner windbox. Lighting system shall have capacity to stabilize the firing during startup periods. Igniter shall be arranged for easy removal and servicing while the boiler is in operation. Furnish igniter complete with a spark rod and a power pack and capable of operation on natural gas or propane. Power pack shall operate on 120 volt, 60 cycle, single phase power. Provide gas piping, to one point of supply, including necessary gas pressure regulators. Igniter system shall include controls, gages, flame safety systems, interlocks and accessories to comply with NFPA requirements and applicable codes and regulations.

d. Windbox: Existing windboxes are constructed of carbon steel plate. A new front plate shall be installed on the existing windbox structure with appropriate mounting openings for the new burners and fabricated from 1/4 inch thick carbon steel plate. Design windbox modifications to provide even and uniform air entrance into each burner register and seal weld new front plate to existing windbox elements. Verify windbox is seal weld front plate to existing windbox elements. Verify windbox is seal welded to the boiler side wall. Provide windbox with support legs as necessary to support windbox modifications and new burner equipment.

e. FD Fans: FD fans for boilers 1 and 2 now discharge into a plenum that supplies air below the stoker and to the oil burner windbox. Disconnect the ductwork from the FD fan discharge to the siftings hopper below the stoker grate and install blanking plates on the fan discharge duct and on the siftings hopper air inlet duct such that all FD fan airflow is directed only to the oil burner windbox on the side of each boiler.

f. Purge Connection: Provide atomizing media purge connection, properly valved, for purging oil from gun prior to removal from burner.

g. Guide Pipe Purging: Provide piping and flexible hoses for the guide pipe purge system. Air from the forced draft fan shall be provided for guide pipe purging during normal operation.

h. Materials: Metal parts exposed to radiant heat, including the atomizer shield, shall be of stainless steel or other approved alloy.

i. Natural Gas Control Valve: Natural gas shall be supplied at 45 psig and above 50 degrees F at the inlet of the fuel piping train. Size the natural gas automatic control valve for necessary differential pressure to provide specified heat input to the boiler..

j. Fuel Oil Control Valve: Fuel oil will be supplied at 150 psig and above 50 degrees F at the inlet of the fuel piping train. Size fuel oil automatic control valve for necessary differential pressure to provide specified heat input to the boiler.

k. Fuel: ASTM D396, Grade no. #2 Ultra Low Sulfur Diesel and natural gas.

2.5.1.2 Flame Safeguard Controls

Provide a complete system of valves, interlocks and controls in accordance with NFPA 85 and as approved by Factory Mutual Engineering and Research.

a. Natural Gas Train: Provide natural gas train for each boiler consisting of two gas burners, gas control valve, two safety shutoff valves with interposing vent valves, high gas valve, and manual shutoff cock. Provide low gas pressure switch, high gas pressure switch, and other safety interlocks and devices as required. Provide in panel mounted on burner package the following gages. Gages shall be 6 inch with white coated dial and black figures.

(1) Natural gas supply (0 to 75 psig)

(2) Burner gas supply pressure (0 to 30 psig)

b. Fuel Oil Train: Provide fuel oil train for each burner consisting of steam and air atomizing oil gun, fuel oil control valve, two safety shutoff valves, recirculation valve, strainer, and flexible hose connection(s) to oil burner. Provide low oil pressure and low atomizing air pressure switches, and other safety interlocks and devices as required. Provide in panel mounted on burner package the following gages. Gages shall be 6 inch with white coated dials and black figures:

(1) Fuel oil supply pressure (0 to 150 psig)

(2) Fuel oil pressure at burner (0 to 150 psig)

(3) Atomizing media pressure at burner (0 to 150 psig)

c. Control Sequencing: Flame safeguard system shall be designed to ensure safe purge, light-off and shutdown procedures, and to monitor light-off, main flame and boiler operating conditions.

(1) Control Type: The flame safeguard system shall be built on the

existing BMS hardware and software platform, reprogrammed for the new equipment.

(2) Scanner and Relay: Provide system with ultraviolet and infrared scanners and electronic relay located in the side wall which will shut down the fuel within 2 to 4 seconds of loss of flame.

(3) Output Meter: Provide scanner output signal to the BMS system and indicating light on relay enclosure.

(4) Limit Devices: The burner replacement project shall include the following devices, as a minimum to be incorporated into the existing BMS system of each boiler:

(a) Flame failure
(b) Low fuel oil pressure
(c) Low natural gas pressure
(d) High natural gas pressure
(e) Low combustion air flow
(g) Low atomizing media pressure
(h) Low instrument air pressure
(i) Any additional as required by FM DS 12-17 or NFPA 85

(5) Annunciator: Safety system limits specified above shall be connected to the existing BMS system of each boiler for display local boiler control panel and in the control room.

d. Light Off: Failure shall require a manual restart of the programmer startup sequence. Safety system shall provide a mandatory purge with the forced draft fan vanes proven open with VFD at full speed, induced draft fan damper proven open with VFD at full speed, and then a return to proven low fire positions before light off. Main fuel valve shall open for a timed period of 10 seconds during trial for ignition.

e. Circuit Analyzer: Provide a circuit analyzer system within the BMS system, which will indicate which circuits are energized at any specific time, and will thereby indicate status of each step in the lightoff sequence and the status of each safety circuit.

f. Control Panel: Burner controls and sensing elements shall be terminated in the existing BMS panel of each boiler.

2.6 FANS

2.6.1 Forced Draft Fan

CID A-A-59222, Type 1, Style 1, Class 1, except as specified otherwise.

Fan shall be provided to supply windbox pressure and flow required to supply burner combustion and flame shape requirements. Forced Draft Fan to be installed in positions shown on the drawings.

2.6.1.1 FD Fan Size

Size fans for complete combustion of fuel at maximum firing rate taking into account design allowances, corrections for burner pressure drop, furnace pressure, combustion air temperature, plant elevation, and other design factors including allowance for economizer. After fans have been sized in accordance with the above, add the following allowances for

momentary overloads and normal deterioration of fans, firing equipment and boilers:

a. Excess volume: 10 percent

b. Excess pressure: 20 percent

2.6.1.2 Fan Construction

Construct all fan wheel and fan housings of steel. Direction of fan discharge shall be easily changed at angles of 45 degrees. Provide fan shaft with roller bearings mounted in pillow blocks (standard arrangement 8).

2.6.1.3 Electric Motor

Motor for driving each forced draft fan shall be variable speed with a dedicated VFD unit, 480 volt, three phase, 60 Hz, totally enclosed, fan cooled not less than the hp specified under MOTORS AND DRIVES in this section, and shall not overload at the specified capacity with unheated cold air. Provide 3/4 inch thick steel soleplate for motor, welded to the common frame of the fan. Soleplate must be common for all four motor mounting bolts. Separate parallel soleplate bars are not acceptable.

2.6.1.4 Noise Level

Noise level shall not exceed 85 dBA sound pressure level at 5 feet above the floor and 5 feet from the fan in any direction. Provide heavy duty sound attenuator with screen on fan inlet, if required, to meet the sound pressure level requirements.

2.6.1.5 Induced Draft (ID) Fan

CID A-A-59222, Type 2, Style 2, Class 1, except as specified otherwise.

Fan shall be provided to supply draft and flow required to support burner combustion and flame shape requirements. Induced Draft Fan to be installed in positions shown on the drawings.

2.6.1.6 ID Fan Size

Size fans for complete combustion of fuel at maximum firing rate taking into account design allowances, corrections for burner pressure drop, furnace pressure, combustion air temperature, plant elevation, and other design factors including allowance for economizer. After fans have been sized in accordance with the above, add the following allowances for momentary overloads and normal deterioration of fans, firing equipment and boilers:

a. Excess volume: 10 percent

b. Excess pressure: 20 percent

2.6.1.7 ID Fan Construction

Construct fan wheel of steel. Direction of fan discharge shall be easily changed at angles of 45 degrees. Provide fan with roller bearings mounted in pillow blocks. Standard Arrangement 8.

2.6.1.8 ID Fan Electric Motor

Motor for driving the forced draft fan shall be variable speed with a dedicated VFD unit, 480 volt, three phase, 60 Hz, totally enclosed, fan cooled not less than the hp, as specified under MOTORS AND DRIVES in this section, and shall not overload at the specified capacity with unheated cold air. Provide 1/2 inch thick steel soleplate for motor. Soleplate must be common for all four motor mounting bolts. Separate parallel soleplate bars are not acceptable.

2.6.1.9 ID Fan Noise Level

Noise level shall not exceed 85 dBA sound pressure level at 5 feet above the floor and 1 1/2 meters 5 feet from the fan in any direction.

2.6.2 Flue Gas Recirculation (FGR) Fan

CID A-A-59222, Type 2 Style 2, Class 1, except as specified otherwise.

2.6.2.1 Fan Size

Size fans for 20 percent flue gas recirculation flow from the flue gas duct to the combustion air duct at all firing rates for each boiler. Fan suction and discharge duct location are shown on the drawings and fan is to be sized to overcome static pressures in each attaching duct. After fans have been sized in accordance with the above, add the following allowances for momentary overloads and normal deterioration of fans, firing equipment and boilers:

a. Excess volume: 10 percent

b. Excess pressure: 20 percent

2.6.2.2 FGR Fan Construction

Construct fan wheel of steel. Direction of fan discharge shall be easily changed at angles of 45 degrees. Provide fan with roller bearings mounted in pillow blocks. Standard Arrangment 8.

2.6.2.3 FGR Electric Motor

Motor for driving the forced draft fan shall be variable speed, with a dedicated VFD unit, 480 volt, three phase, 60 Hz, totally enclosed, fan cooled not less than the kW hp, as specified under MOTORS AND DRIVES in this section, and shall not overload at the specified capacity with unheated cold air. Provide 1/2inch thick steel soleplate for motor. Soleplate must be common for all four motor mounting bolts. Separate parallel soleplate bars are not acceptable.

2.6.2.4 FGR Fan Noise Level

Noise level shall not exceed 85 dBA sound pressure level at 5 feet above the floor and 5 feet from the fan in any direction.

2.7 BREECHING, EXPANSION JOINTS, STACKS, AND DAMPERS:

2.7.1 Ductwork and Breeching

Provide with rectangular cross section and fabricate of not less than 3/16

inch thick black steel plate unless otherwise noted. Stiffeners shall be not less than 2 1/2 by 2 by 1/4 inch steel angles welded to exterior with 2 inch leg outstanding. Stiffeners shall not exceed 3 feet on centers. Breeching shall connect to:

a. From each boilers(1 and 2) flue gas outlet, to the new economizer inlet; intermediate heat recovery equipment, air pollution control equipment

b. From boilers (1 and 2) new economizer outlet to new ID fan inlet

c. From new ID fan outlet to existing stack as required

d. From existing fresh air ducts (boilers 1 and 2) to new FD fan inlet

e. From the new boiler outlet ducts (boilers 1 and 2 - item 1 above) to the new FGR fan inlet

f. From the new FGR fan outlet(boilers 1 and 2) to the existing fresh air ducts

g. From the new FD fans to the existing fresh air ducts for boiler 3 and 4

h. From the existing ID fan duct (boilers 3 and 4) to the new FGR fan inlet

i. From the new FGR fan outlet to the new FD fan discharge duct (boilers 3 and 4 - item 'g' above)

2.7.1.1 Ductwork and Breeching Connections and Joints

Weld or bolt ductwork and breeching joints unless indicated otherwise. Welding shall conform to AWS D1.1/D1.1M and AWS D1.3/D1.3M. Bolts for bolted connections shall be not less than 1/2 inch diameter and spaced not more than 3 inches apart, with bolts, lockwashers and nuts being hot-dipped galvanized. Provide bolted joints with a minimum of 1/8 inch thick gaskets. Bolt breeching connections to boilers, equipment items, dampers, expansion joints, and breeching accessories. Flanged breeching connections to equipment shall be drilled to match flanges on equipment. Flanged joints shall be seal welded to make connection gas-tight.

2.7.1.2 Ductwork Painting

Thoroughly wire brush ductwork exterior and clean by degreasing with nonflammable solvent prior to painting. All ductwork shall be painted with a zinc rich primer and finish coat of 2 mils of alkyd enamel paint. Finish coat paint color to match existing ductwork.

2.7.1.3 Breeching Access Doors

Provide breeching access doors where indicated. Construct access doors with frame and hinged door of cast iron or reinforced steel plate. Frame shall be not less than 25 by 37 inches with access opening of 18 by 30 inches. Connection to breeching shall be gasketed and made with minimum 1/2 inch diameter hot-dipped galvanized bolts, lockwashers, and nuts spaced not less than 5 inches on center. Each side of the access door shall have not less than two quick-clamp positive closing latches, with

the long side opposite the hinges containing three clamps to give a gastight seal. Side of access door opposite hinges shall contain a minimum 3 by 5 inch size handle. Provide a gasket consisting of 3/8 inch diameter fire resistant resilient rope seal and mastic compound between the access door and the access door frame.

2.7.1.4 Breeching Structural Materials

Structural and support materials shall be steel and shall comply with the applicable sections of AISC 360. Support and stiffen breeching as indicated.

2.7.2 Expansion Joints

2.7.2.1 Non-Metallic Expansion Joints

Provide factory fabricated non-metallic breeching expansion joints 1/8 inch minimum thickness . Expansion joints shall be constructed of fluoroelastomer vulcanized to two plies of knitted wire mesh capable of a minimum of 1.5 inches of axial compression, 1.5 inches of axial extension and 1 inch of lateral offset unless indicated otherwise. Joints shall have a continuous operating temperature rating of 400 degrees F, with excursion design standards up to 750 degrees F. Operating pressure range shall be minus 5 psig to plus 5 psig. Expansion joints shall be preformed with integrally molded corners, suitable for mounting against a 6 inch flange. Provide carbon steel backup bars with slotted holes, bolts, and nuts.

2.7.3 Dampers

2.7.3.1 Multilouver Dampers

Provide factory fabricated multilouver dampers with parallel or opposed blade type operation. Construct damper frame of distortion resistant welded steel channels with raised seat to ensure free nonbinding operation of blades and to keep blades square in the frame. Construct blades of 1/4 inch thick steel plate in a stressed skin airfoil-shape with fully welded seams containing no external ribs. Blade shafts shall be stainless steel. Blades shall be pinned to blade shafts. Louver shaft bearings shall be outboard type and shall be self-lubricating and self-cleaning. Bearing seals shall be gas-tight.

a. Multilouver Damper Linkage: Damper linkage shall be adjustable and of pinned construction for easy removal and shall be designed to handle full operation torque. Linkage on dampers in clean flue gas areas shall operate from a single connection point.

b. Control Damper Operators: Provide control damper operators as noted. Operators may be electrically operated with positive positioning, manual override, and hydraulic or oil immersed gear trains. Each operator shall be full-proportioning type, with spring return to position indicated in case of loss of power. Damper operating speeds shall be selected or adjusted so that the operators will remain in step with the controller. Operators acting in sequence with other operators shall have adjustment of control sequence as required by the operating characteristics of the system.

c. Two-Position Damper Operators shall be pneumatically operated with air cylinder, four way valve, and solenoid valve arrangement.

2.8 MISCELLANEOUS EQUIPMENT

2.8.1 Condensate Receiver

Provide a horizontal rectangular type tank with a storage capacity of not less than 100 gallons. Tank shall be constructed of welded steel plate not less than 1/4 inch thick. Provide condensate tank with a 24 inch diameter manway, dual gage glasses with protective guards, duplex pumps, float switches, and other connections as indicated.

2.8.1.1 Coating

Surface blast interior of tank to bare metal and coat with a baked-on phenolic lining or corrosion resistant liner consisting of a resin and hardener suitable for immersion in water at not less than 250 degrees F. Coat tank exterior with one shop coat of manufacturer's standard primer rated for service of not less than 250 degrees F.

2.8.1.2 Accessories

Provide the condensate receiver with the following:

a. Connections for condensate return, vent, water outlet, drain, sampling outlet, level transmitter and controls.

b. 2 inch vent.

c. Reflex type water gage glasses with shutoff valves and guards.

d. One, 5 inch dial, thermometer, 50 to 300 degree F range, with a lagging extension type wells, for steam and water space.

e. Two inch overflow trap.

f. One high water alarm switch with stainless steel float and trim. Circuit shall close as liquid level rises. Locate switch to close circuit when water level rises to two inches below overflow level of receiver.

g. Two start/stop switch-assemblies for duplex pumps, with stainless steel float and trim. Close circuit as liquid level rises. Locate switch to close circuit when water level rises above 50 percent of the storage capacity of the storage tank.

h. Install switches in the tank with flanged connections to tank.

i. Provide pumps and motors to deliver condensate to the main condensate tank of the plant. Each pump shall deliver 50 gpm at 40 ft. of head.

j. Furnish pipe, fittings, controls, specialties, bolts, gaskets, drains, check valves, block valves and other equipment necessary for a complete unit. Install at the jobsite.

k. Provide automatic control system to control level in condensate tank by cyclic operation of the duplex condensate pumps.

l. Provide tank with steel angle support legs extending 1 foot below bottom of the tank. Coat tank with one coat of manufacturer's standard

high temperature primer.

m. Coat tank with one coat of manufacturer's standard high temperature primer.

n. Insulate exterior of receiver tank with the equivalent of 2 inches of miner wool and aluminum lagging.

2.8.2 Variable Frequency Motor Controller

Remotely installed cabinet housed units with solid state rectification and inverter equipment to vary frequency of electrical power to the drive motors.

Provide one variable frequency motor controller (VFD) for each fan motor provided in the Project.

2.8.2.1 Housing

House the controller in a wall or floor mounted, NEMA 12 enclosure finished with manufacturers standard painted finish. Provide control panel complete with fused disconnect switches, magnetic across the line bypass starters with thermal overload protection, transformer, hand-off-automatic selector switches, hand potentiometer for manual speed control, fuses and running lights.

Manual Switch: Locate the manual switch within the control panel so that in the event failure of any of the components the motor can be put across the line at full voltage to maintain fan pressure. Provide a mechanical door interlock that allows the panel to open only when the fused disconnect is in the off position.

2.8.2.2 Ratings

Each controller shall be rated for a supply of 480 volts, three phase, 60 Hz. The output shall be 480 volts, three phase with frequency variable between zero and 60 Hz. Controllers shall be rated to operate the motors continuously at their rated horsepower and frequency. Speed regulation shall be within (plus or minus) three percent of set point without tachometer feedback. Electrical supply system shall have an available short circuit rating of 32,000 amperes symmetrical.

2.8.2.3 Minimum Speed

Each controller shall be capable of driving the motor continuously at a lower speed no greater than 20 percent of full rated motor speed with stable operation and without overheating the motor under rated ambient conditions. Provide estimate of minimum speed at which motor can be operated continuously without overheating or problems of instability due to overhauling of the load.

2.8.2.4 Fault Protection

Provide controller fault protection so that a single or three phase short circuit at the controller terminals or inverter commutation failure will not result in damage to power circuit components. Provide overload protection so that motor and controller are protected against operating overloads.

2.8.2.5 Time Delay

Provide adjustable time delay under voltage protection so that motors will continue to operate during momentary voltage fluctuation or loss of voltage. Time adjustment shall be zero to 5 seconds. Provide for orderly shutdown on undervoltage conditions exceeding the time delay interval.

2.8.2.6 Acceleration/Deceleration

Provide adjustable timed linear acceleration and deceleration.

2.8.2.7 Voltage/Frequency Control

Provide volts/Hz control to prevent motor overheating throughout the speed range.

2.8.2.8 Door Interlocks

Provide door interlocks to prevent opening of enclosure doors unless power is disconnected.

2.8.2.9 Shutdown Conditions

Controllers shall be self protecting and shall provide orderly shutdown for, but not limited to, the following conditions:

a. Loss of input power

b. Undervoltage

c. Sustained gradual overload

d. Fault or large instantaneous overload

e. Overtemperature

f. Failure of VFD enclosure ventilating system

g. Overvoltage

h. Control circuit failure

Provide contacts for remote annunciation of shutdown or abnormal condition.

2.8.2.10 Electrical Bypass

Provide each controller with manual isolation and bypass switching. Switch shall be manually operated with controller de-energized. Switch shall be two position with provisions for locking the switch in either position.

a. Normal Position: Bypass shall be open and connect controller to the supply circuit and the load.

b. Bypass Position: Bypass shall be closed and the controller shall be electronically isolated from the supply and the load. Isolating contacts shall be located so that it is possible to verify by visual inspection that the contacts are open and the controller is electrically isolated. In the bypass position the motor shall be

operated at constant speed and controlled from the air circuit breaker. Provide auxiliary contacts that close in the bypass position. Auxiliary contacts shall be used to activate the damper control to provide fan load control in the bypass position.

2.8.2.11 Controller Environmental Protection

a. Ventilation: Design controllers enclosed and ventilated for installation in a moderately dusty area. Provide forced filtered ventilation including fans, filters, controls and accessories required for operation. Enclosures shall be operated under positive pressure at all times. Provide filtered ventilating openings and gasketed doors to prevent infiltration of dust.

b. Heating: Provide electric heaters to prevent condensation in the enclosure and to prevent low ingoing air temperatures that exceed the equipment rating. Provide a low temperature alarm to sound when enclosure temperature falls below required minimum temperature. Provide contacts for remote annunciation of alarm condition.

2.8.2.12 Method of Control

Supply each controller from an electrically operated air circuit breaker or motor starter. Controller ventilation and heating shall be from another circuit.

a. Start Signal: Closes the electrically operated air circuit breaker or motor starter to energize the controller. The controller shall accelerate the fan to operating speed. Fan speed shall be controlled from the load control signal.

b. Stop Signal: Opens the electrically operated air circuit breaker or motor starter to deenergize the controller. Upon deenergization, the controller control system shall revert to the stop condition.

c. Speed Control System: Matches fan discharge to system demand and maintains a system header pressure controlled to the set point values. Provide Manual/Automatic control stations for each boiler fan. Provide indicators for feedwater header pressure and individual boiler feedwater pump flow.

2.8.3 Valve Actuators

Electrically operated and designed so that valve may be manually operated by removing the drive pins or otherwise disengaging the electric actuator. Actuators shall be operated by push button control. Locate one push button at a position adjacent to the valve. Locate a second push button on the control screen within the boiler control room. Provide a valve position indicator utilizing local indicating lights. A green light shall indicate the valve is fully open and an amber light shall indicate the valve is fully closed. Both lights on shall indicate when the valve is partially open. Provide torque limit controls to protect the valve during opening and closing for electrically operated valves. Actuator electric motor shall be totally enclosed, 480 volts, 3 phase, 60 Hz as specified under the paragraph MOTORS AND DRIVES in this section. Provide NEMA 4 control enclosures.

Pneumatically operated actuators are acceptable for quarter turn ball valves and specialty valves. Actuators shall be designed for "fail safe"

operation, so that valve will return to the safe "fail" position when air pressure is lost. Actuators shall not be operated by push buttons controlling 3-way or 4-way solenoid valve systems that supply compressed air to the selected side of the actuator and vent the opposite side of the actuator. Locate push buttons on the local control screen and the control room control screen. Provide feedback indicator lights for valve is fully open and an amber light shall indicate the valve is fully closed. Both lights shall indicate the valve is partially open.

2.9 PIPING

Piping work shall include the provision of piping systems, including valving and specialty items, for the steam plant and related external auxiliary equipment. Piping materials, design, and fabrication shall be in accordance with ASME B31.1 except as modified below or indicated otherwise. The requirements of ASME B31.1 apply to the building steam heating and steam distribution piping designed for 15 psig or lower and hot water heating systems 30 psig or lower. Provide piping materials suitable for the maximum pressure at the maximum temperature at which the equipment must operate. Compute expansion of pipe with operating temperatures above zero degrees F with zero degrees F in lieu of 70 degrees F specified in ASME B31.1.

2.9.1 Piping Materials

a. Site wide requirement: Pipe Black, ASTM A53/A53M or ASTM A106/A106M seamless steel pipe, Grade A or B. Wall thickness not less than Schedule 40 for any pipe with welded connections; not less than schedule 80 for any pipe with threaded connections.

b. Steam Pipe, Boiler Feedwater Pipe, Relief Pipe and Steam Tracer: Pipe Black, ASTM A53/A53M or ASTM A106/A106M seamless steel pipe, Grade A or B. Wall thickness not less than Schedule 40 for pipe 2-1/2 inches and larger; not less than Schedule 80 for pipe below 2-1/2 inches. Steam tracer pipe, with steam up to 15 psig, may be ASTM B88, Type K copper tubing.

c. Condensate Pipe and Boiler Blowdown Pipe: Black, welded or seamless ASTM A53/A53M or ASTM A106/A106M, steel pipe, Grade A or B. Wall thickness not less than extra strong (XS or Schedule 80) for all sizes.

d. Chemical Feed Pipe: ASTM A312/A312M austenitic stainless steel.

e. Fuel Oil Pipe: ASTM A53/A53M or ASTM A106/A106M, seamless black steel pipe, Grade A or B. Wall thickness not less than Schedule 40 for pipe 2-1/2 inches and larger; not less than Schedule 80 for pipe below 2-1/2 inches.

f. Treated Water, Hot Water Heating, High Temperature Water, Drains (Other Than Sanitary), and Overflow Pipe: ASTM A53/A53M, black, welded or seamless steel up to a maximum pressure of 250 psig or ASTM A106/A106M, Grade A or B.

g. Gas Pipe and Compressed Air Pipe: ASTM A53/A53M welded or seamless pipe up to a maximum pressure of 250 psig or ASTM A106/A106M, Grade A or B. Wall thickness not less than Schedule 40 for pipe 2-1/2 inches and larger; not less than schedule 80 for pipe below 2-1/2 inches.

h. Instrument Air Pipe: Stainless steel type 304 or 316 tubing with

compression type fittings and instrument connections.

i. Compressed Air Piping for Fuel Oil Atomization: ASTM A53/A53M, black, welded or seamless steel.

j. Steam Tracer Pipe: As an option, the, contractor may provide ASTM B88, Type K, copper tubing for steam up 15 psig.

2.9.2 Chlorinated Polyvinyl Chloride (CPVC)

Chlorinated polyvinyl chloride (CPVC) and other plastic tubing and fittings shall not be used in the steam heating plant.

2.9.3 Fittings

2.9.3.1 Fittings for Steel Pipe

a. Sizes 1/8 to 2 inches: ASME B16.3 malleable iron, screwed end fittings, for working pressures not greater than 300 psig at temperatures not greater than 450 degrees F or ASME B16.11 forged steel.

b. Sizes 1/8 to 2 inches: ASME B16.11 steel, socket welded end fittings.

c. Sizes 1/8 to 2 1/2 inches: ASME B16.9 steel, butt welding fittings.

d. Sizes 2 1/2 to 24 inches: ASME B16.5 forged steel, flanged fittings or ASME B16.9 steel, butt welding fittings.

2.9.3.2 Welded Outlets and Welding Saddles

Make branch connections of 45 and 90 degrees either with ASME B16.9 forged steel welded outlet fittings. Welding outlets shall not be smaller than two pipe sizes less than the main pipe sizes.

2.9.3.3 Fittings For Stainless Steel Tubing

For instrument air tubing up to 1 inch in size, fittings may be ferrule type swaged end type, as produced by Swagelok, Parker-Hannifin and Ham-Let companies, or Government approved equal.

2.9.3.4 Unions

a. Unions For Steel Pipe: ASME B16.11, ASME B16.39 threaded. Unions for zinc coated pipe shall be zinc coated.

2.9.4 Flanges

ASME B16.5, forged steel, welding type. Remove the raised faces on flanges when used with flanges having a flat face. Except as specified otherwise, pressure and temperature limitations shall be as specified in ASME B16.5 for the proper class and service, and the type face specified.

2.9.5 Valves

2.9.5.1 Low Pressure

Valves for maximum working pressure of 150 psig saturated steam or 225 psig W.O.G. (Water, Oil, Gas) at 200 degrees F, non-shock service shall be

Class 150 or Class 300. All valves in steam service shall be cast or forged steel; bronze bodied valves are not allowed in steam service; cast iron bodies valves are not allowed in steam service.

a. Valve Sizes 2 Inches and Smaller:

(1) Non-Throttling Valves: Gate valves, bronze, wedge disc, rising stem, Class 150, MSS SP-80 or ball valves, bronze, double stem seals are acceptable for non-steam service only. Valves in steam service are to be forged or cast steel or stainless steel with socket weld or threaded ends., stainless steel ball and shaft, tight shutoff.

(2) Globe Valves and Angle Valves: Bronze, Class 150, MSS SP-80 are acceptable for non-steam service only. Valves in steam service are to be forged or cast steel or stainless steel with socket weld or threaded ends.

(3) Check Valves: Bronze, Type IV, swing check and III, lift check, Class 150, MSS SP-80 are acceptable for non-steam service only. Valves in steam service are to be forged or cast steel or stainless steel with socket weld or threaded ends.

b. Valve sizes 2 1/2 inches and larger.

(1) Gate Valves: Flanged, cast iron, Class 250, MSS SP-70 are acceptable for cold water service only. Flanged or steel, Class 150 or 300, ASME B16.34 are acceptable for steam and feedwater service. Valves shall have wedge disc, outside screw and yoke (OS&Y), rising stem; valves 8 inches and larger shall have globe valved bypass.

(2) Globe Valves and Angle Valves: Flanged, cast iron, Class 250, MSS SP-85 are acceptable for cold water service only. or Flanged steel, Class 150 or 300, ASME B16.34. are acceptable for steam and feedwater service.

(3) Check Valves: Flanged, cast iron, Class 250 are acceptable for cold water service. Flanged steel, Class 150 or 300, Type WCB; lift or swing check, ASME B16.34. are acceptable for steam and feedwater service.

2.9.5.2 Medium Pressure

Valves for maximum working pressure of 250 psig steam at a maximum temperature of 450 degrees F or 500 psig W.O.G. at 200 degrees F (non-shock).

Valve sizes 2 1/2 inches and larger:

a. Gate Valves: Flanged or butt welded, steel, Class 300, ASME B16.34. Valves shall have wedge disc, OS&Y, rising stem; each valve 8 inches and larger shall have globe valved bypass line.

b. Globe Valves and Angle Valves: Flanged or butt welded, steel, Class 300, ASME B16.34.

c. Check Valves: Flanged or butt welded steel, Class 300, Type WCB lift or swing check, ASME B16.34.

2.9.5.3 High Pressure

Valves for maximum working pressure of 300 psigsteam at a maximum temperature of 850 degrees F or a maximum W.O.G. pressure of 675 psig at 300 degrees F (non-shock).

Valve sizes 2 1/2 inches and larger:

a. Gate Valves, Globe Valves, and Angle Valves: Flanged or butt welded, ASME B16.34, steel, Class 300, rising stem, OS&Y. Gate valves 8 inches and larger shall have globe valved bypass.

b. Check Valves: Flanged or butt welded, steel, Class 300, Type WCB, lift or swing check, ASME B16.34.

2.9.5.4 Ball Valves

ASME B16.5 and API Std 607 double stem seal type for bubble tight shutoff. Seats and seals shall be TFE material. Ball and shaft shall be stainless steel. Provide mechanical stops to prevent cycling valve in wrong direction and self-aligning stem seal.

Ball valves in natural gas or fuel oil service must comply with API 607.

2.9.5.5 Valve Accessories

ASME B16.34 valve operating mechanisms including chain wheels, gear operators, floor stands, electric motors, air motors and cylinder-type actuating devices. Provide accessories as follows and as indicated.

a. Provide power operators with remote position indicators on the following valves: Fuel isolation valves at each burner (natural gas, pilot gas and fuel oil) controlled by the burner management system. Additional isolation valves in these lines will not require powered operators

b. Provide motorized actuators or chain wheels with chain and guides on valves with handwheel centerline higher than 7 feet above the floor or platform except where specified otherwise. Chains shall extend from valve to within 3 feet above floor. Provide impact chain wheels on steam headers and other locations where valve has a tendency to stick. When a valve is motorized, provide hand operation for emergency use.

c. Provide gear operators on ball valves larger than 6 inches and on gate valves 12 inches and larger.

2.9.5.6 Steam Pressure Regulating Valves

Steam pressure regulating valves shall have a minimum of Class 150 except as specified otherwise. Steam pressure regulating valves shall have a cast steel valve body with valve seats and disc of replaceable heat treated stainless steel. Valves shall be single seated, shall seat tight under dead end conditions, and shall go to the closed position in the event of pressure failure of the operating medium. Valves shall be spring loaded diaphragm operated type, except valves exposed to ambient temperature of less than 35 degrees F or exposed to the weather shall be piston operated type. Capacity of valves shall be not less than that

indicated. Pilot valves shall have strainer at inlet from external feeder piping.

a. Spring Loaded Diaphragm Operated Valves: Fabricate main spring of stainless steel, which shall not be in the path of steam flow through the valve. Control valve by pilot valve through external feeder piping.

b. Piston Operated Valves: Control valve by integral pilot valve through external feeder piping.

2.9.5.7 Safety Relief Valves

ASME BPVC SEC I ASTM F1508, Style D or E, with Class 300 inlet flange, with test lever, designed for the intended service.

2.9.6 Bolts and Nuts

a. Bolts: ASTM A193/A193M, Grade B8. Lengths of bolts shall be such that not less than two full threads will extend beyond the nut with the bolts tightened to required tensions and washers seated.

b. Nuts: ASTM A194/A194M, Grade 8.

2.9.7 Gaskets

ASME B31.1 and as specified below, except provide spiral wound metal covered non-asbestos gaskets in lieu of compressed sheet non-asbestos. Gaskets shall be as thin as the finish of surfaces will permit. Do not use paper, vegetable fiber, rubber, or rubber inserted gaskets. Provide metal or metal jacketed non-asbestos gaskets with small male and female and small tongue-and-groove flanges and flanged fittings; they may be used with steel flanges with lapped, large male and female, large tongue-and-groove, and raised facings. Provide fullface gaskets with flat-faced flanges. Raised face cast iron flanges, lapped steel flanges, and raised faced steel flanges shall have ring gaskets with an outside diameter extending to the inside of the bolt holes. Widths of gaskets for small male and female and for tongue-and-groove joints shall be equal to the widths of the male face and tongue. Gaskets shall have an inside diameter equal to or larger than the port opening. Dimensions for nonmetallic gaskets shall be in accordance with ASME B16.21. Materials for flanged gaskets shall be as listed below for service specified:

a. Steam, Boiler Blowdown, Exhaust Steam: Spiral wound metal composition.

b. Boiler Feed Water: Metal jacketed non-asbestos, or Spiral wound metal composition.

c. Hot Water, (above 100 degrees F): Spiral wound metal non-asbestos.

d. Cold Water: Red rubber, neoprene rubber, or spiral wound metal composition.

e. Diesel Fuel (No. 2): ASME B16.21 metallic or spiral wound metal composition.

f. Compressed Air: Spiral wound metal non-asbestos.

2.9.8 Expansion Joints

2.9.8.1 Bellows Expansion Joints

ASTM F1120 flexible guided type with stainless steel expansion element, internal sleeves and external covers. Joints shall be designed for a working pressure of 250 psig and a temperature of 350 degrees F.

2.9.9 Pipe Hangers and Supports

MSS SP-58 and MSS SP-69, Type 1 of the adjustable type, except as specified or indicated otherwise. Suspended steam and condensate piping shall have pipe hangers Type 1 with insulation protection saddles welded to the pipe and having thickness equal to the insulation required for the service of the pipe. Provide insulated piping, except steam and condensate piping, with insulation protection shields Type 40. Provide bronze or copper plated collars on uninsulated copper piping. Support rods shall be steel. Rods, hangers and supports shall be zinc plated, except for uninsulated copper piping which shall be copper plated; cast iron rollers, bases and saddles may be painted with two coats of heat resisting aluminum paint in lieu of zinc plating. Axles for cast iron rollers shall be stainless steel. Size hanger rods with a 150 percent safety factor for a seismic design.

2.9.10 Instrumentation

2.9.10.1 Pressure and Vacuum Gages

Conform to the applicable requirements of ASME B40.100.

2.9.10.2 Indicating Thermometers

MIL-T-19646 dial type. Thermometer shall include a separable immersion well.

2.9.11 Miscellaneous Pipeline Components

2.9.11.1 Steam Traps

CID A-A-60001. Inverted bucket high pressure steam traps designed for use at 150 psig at 366 degrees F. Low pressure steam traps shall be float and thermostatic type for pressures up to 15 psig. Provide traps with separate strainers unless specified otherwise.

2.9.11.2 Strainers

FS WW-S-2739, Style Y with blow off outlet. Construct strainers for Class 300 of cast carbon steel in accordance with ASME B16.5 for minimum of 300 psigsaturated steam pressure. Provide blow off outlet with pipe nipple and gate valve.

2.9.12 Insulation Types and Installation Procedures

Materials and application shall be as specified in Section 23 07 00 THERMAL INSULATION FOR MECHANICAL SYSTEMS.

2.9.13 Pipe Sleeves

2.9.13.1 Floor Slabs, Roof Slabs, and Outside Walls Above and Below Grade

Galvanized steel pipe having an i.d. at least 1/2 inch larger than the o.d. of the pipe, including insulation and lagging, passing through it. Provide sufficient sleeve length to extend completely through floors, roofs, and walls, so that sleeve ends are flush with finished surfaces except that ends of sleeves for floor slabs shall extend 1/2 inch above finished floor surface. Sleeves located in waterproofed construction shall include flange and clamping ring.

2.9.13.2 Partitions

Galvanized sheet steel, 26 gage or heavier, of sufficient length to completely extend through partition thickness with sleeve ends flush with partition finished surface.

2.9.14 Piping Identification

Conform to MIL-STD-101 and place in clearly visible locations; except that piping in the boiler room shall be painted the primary color of the color code. Labels and tapes conforming to ASME A13.1 shall be used in lieu of band painting or stenciling. Labels shall be outdoor grade acrylic plastic. Markings on the labels shall indicate the direction of flow, flowing media, and media design pressure and temperature. Spacing of identification marking shall not exceed 10 feet. Provide two copies of the complete color and stencil codes used. Frame codes under glass and install where directed.

2.10 MARKING

Identify equipment, valves, switches, motor controllers, and controls or indicating elements by printed, stamped or manufactured identification plates or tags of rigid plastic or non-ferrous material. Lettering for identification plates or tags shall be not less than 3/16 inch high. Nomenclature and identification symbols used on identification plates or tags shall correspond to those used in the maintenance manuals, operating instructions, and schematic diagrams. Rigidly affix identification plates or tags to equipment or devices without impairing functions or, when this is not possible, attach using a non-ferrous wire or chain. In addition to the identification plate or tag, each major component of equipment shall have a nameplate listing the manufacturer's name, model number, and when applicable, electrical rating and other information required by pertinent standards or codes.

All control cables shall be marked on each end of each conductor with the field point using that conductor. Printed labels are to be permanently affixed to each end of each control cable conductor used in the project.

2.11 WELDING MATERIALS

Comply with ASME BPVC SEC II-C. Welding equipment, electrodes, welding wire, and fluxes shall be capable of producing satisfactory welds when used by a qualified welder or welding operator using qualified welding procedures.

2.12 MOTORS AND DRIVES

Alternating current electric motors shall meet requirements of NEMA MG 1. Motors shall be designed for continuous operation at rated load under usual service conditions as defined by NEMA. Motors less than 1 hp shall meet NEMA High Efficiency requirements. Motors 1 hp and larger shall meet NEMA Premium Efficiency requirements. Unless specifically noted otherwise, motors less than 1/2 hp shall be 115 volt, 60 Hz, single phase, capacitor-start, or permanent split capacitor, with Class B insulation for 104 degrees F ambient. Unless specifically noted otherwise, motors 1/2 hp and larger shall be 460 volt, 60 Hz, three phase, Design B, squirrel cage induction with a minimum insulation of Class F for 104 degrees F ambient. Size motors to meet the power requirements of the driven unit at design conditions, including drive and coupling losses which are incurred, without loading the motor beyond its nameplate power rating. Minimum service factor for totally enclosed, fan cooled motors 1.15. Motor shall be quiet operating. Bearings shall be heavy duty, grease lubricated, anti-friction, single shielded, regreasable type and shall have approved lubricating fittings extended to an easily accessible location for field servicing. Provide sole plates for motors installed on concrete pads. Motors shall have copper windings.

2.13 SOURCE QUALITY CONTROL

2.13.1 Plant Equipment Tests

Tests specified below shall be conducted at factory prior to delivering equipment to job site.

2.13.1.1 Variable Speed Motor Controller Factory Test

Burn-in tests shall be conducted for at least 50 hours at rated conditions. If a component fails during the burn-in test it shall be replaced, and the entire test shall be run again on the complete assembly for another 50 hours. The burn-in test shall not be complete until the entire assembly has operated for 50 hours without failure.

PART 3 EXECUTION

3.1 INSTALLATION

Install materials and equipment as indicated and in accordance with manufacturer's recommendations.

3.1.1 Equipment Installation

Install equipment in accordance with this specification, and the installation instructions of the manufacturers. Equipment mounted on concrete foundations shall be grouted before installing piping. Install piping in such a manner that it will not impart a stress on equipment. Flanged joints shall not be bolted tight unless they match adequately. Expansion bends shall be adequately extended before installation. Support, grade, anchor, and guide all piping so that there are no low pockets, which could accumulate fluids, along the piping run.

3.1.1.1 Equipment Foundations

Equipment foundations shall be of sufficient size and weight, and proper design to prevent shifting of equipment under operating conditions, or

under abnormal conditions which could be imposed upon equipment. Equipment vibration shall be limited within acceptable limits, and isolated. Foundations shall be adequate for soil conditions of the site and shall meet requirements of the equipment manufacturer. Trowel exposed foundation surfaces smooth except when properly roughened surfaces are necessary to receive grout.

3.1.1.2 Forced Draft Fan, Induced Draft Fans and Flue Gas Recirculation Fans

Fan assembly shall be set, shimmed level, anchored and grouted in place prior to setting driver, unless driver and fan are mounted on a common fan support structure from the factory. Fan assembly grouting is not required where fan assembly is mounted directly to structural steel supports; fan assembly will be bolted to structural steel support members with spring type vibration isolators and an adequate size and quantity of fasteners to prevent movement. Driver shall be properly shimmed on base plate using stainless steel shim stock. Shims shall be full size of feet and shall have a slotted hole for installation. After the drive has been properly aligned and shimmed, by an approved millwright, the millwright shall drill and ream the foot and base plates and, install taper pins with nut on top for pullout removal. One front foot and diagonally opposite rear foot shall be pinned to base plate. Bolt equipment into place in an approved manner. Level and grout the fan and bearing pedestal sole plates into place, unless a common fan support structure is provided.

3.1.2 Piping

Unless specified otherwise, erection, welding, brazing, testing and inspection of piping shall be in accordance with ASME B31.1 and Section 40 17 26.00 20 WELDING PRESSURE PIPING. Piping shall follow the general arrangement shown. Cut piping accurately to measurements established for the work. Work piping into place without springing or forcing, except where cold-springing is specified. Piping and equipment within buildings shall be entirely out of the way of lighting fixtures and doors, windows, and other openings. Locate overhead piping in buildings in the most inconspicuous positions. Do not bury or conceal piping until it has been inspected, tested, and approved. Where pipe passes through building structure, pipe joints shall not be concealed, but shall be located where they may be readily inspected and building structure shall not be weakened. Avoid interference with other piping, conduit, or equipment. Except where specifically shown otherwise, vertical piping shall run plumb and straight and parallel to walls. Install piping connected to equipment to provide flexibility for vibration. Support and anchor piping so that strain from weight of piping is not imposed on equipment.

3.1.2.1 Fittings

Provide long radius elbows on welded piping to reduce pressure drops. Do not miter pipe to form elbows, notch straight runs to form full sized tees, or use similar construction. Make branch connections with welding tees, except factory made forged welding branch outlets or nozzles having integral reinforcements conforming to ASME B31.1 may be used.

3.1.2.2 Grading of Pipe Lines

Unless indicated otherwise, install horizontal lines of steam and return piping to grade down in the direction of flow with a pitch of not less than one inch in 30 feet, except in loop mains and main headers where flow may

be either direction. Pitch air lines to the source of supply, and make provisions for draining off condensate. Install water lines to drain to a shutoff valve.

3.1.2.3 Anchoring, Guiding, and Supporting Piping

Anchor and support piping in a manner such that expansion and contraction will take place in the direction desired, prevent vibration by use of vibration dampeners, and prevent undue strains on boilers and equipment served. Fabricate hangers used for support of piping of 2 inch nominal pipe size and larger to permit adequate adjustment after erection while still supporting the load. Provide wall brackets where pipes are adjacent to walls or other vertical surfaces which may be used for supports. Provide supports to carry weight of lines and maintain proper alignment. Provide inserts and sleeves for supports in concrete where necessary and place in new construction before pouring concrete. Provide insulated piping with a pipe covering protection saddle at each support. Provide pipe guides and anchors of approved type at points where necessary to keep pipes in accurate alignment, to direct expansion movement, and to prevent buckling and swaying and undue strain. Provide pipe guides for alignment of pipe connected to free unanchored end of each expansion joint. Support pipe rollers in concrete conduits and trenches by extra strong steel pipe with ends inserted in slots provided in concrete walls. Set pipe supports for rollers at correct elevations either by metal shims or by cutting away of concrete and after placing pipe lines in alignment, grout ends of pipe supports and fix in place. Space pipe supports to provide adequate support for pipes. Pipe shall not have pockets formed in the span due to sagging of pipe between supports, caused by weight of pipe, medium in pipe, insulation, valves, and fittings. Maximum spacing for pipe supports for steel pipe shall be in accordance with ASME B31.1; maximum spacing for supports for copper tubing shall be in accordance with MSS SP-69.

3.1.2.4 Sleeves

Provide pipe sleeves where pipes and tubing pass through masonry and concrete walls, floors, and partitions. Space between pipe, tubing, or insulation and the sleeve shall be not less than 1/4 inch. Hold sleeves securely in proper position and location before and during construction. Sleeves shall be of sufficient length to pass through entire thickness of walls, partitions, and slabs. Sleeves in floor slabs shall extend 1/2 inch above the finished floor. Firmly pack space between pipe or tubing and the sleeve with oakum and caulk on both ends of the sleeve with elastic cement.

3.1.2.5 Flashing for Buildings

Where pipes pass through building roofs and outside walls, provide proper flashing and counter flashing and make tight and waterproof.

3.1.2.6 Outlets for Future Connections

Locate as directed capped or plugged outlets for connections to future equipment, when not located exactly by the project drawings.

3.1.2.7 Screwed Joints in Piping

Provide teflon tape or suitable pipe joint compound applied to male threads only for making up screwed joints. Piping shall be free from fins and burrs. Ream or file out pipe ends to size of bore, and remove chips.

3.1.2.8 Welds and Welded Joints

Weld joints in piping by the metal-arc or gas welding processes in accordance with ASME B31.1 or ASME B31.3 as appropriate. Number or mark each weld to identify the work done by each welder on welds which stress relieving or radiographic inspection is required.

a. Recertification: The Contracting Officer reserves the right to require the Contractor to provide re-examination and recertification of welders.

b. Radiographic testing of circumferential butt welded joints of pipe with operating temperature of 350 degrees F and above shall be required on ten percent of the joints, the location of which will be determined by the Contracting Officer; when more than ten percent of the radiographically tested joints show unacceptable defects radiographically test joints of this type piping.

c. Equipment and Protection: Items of equipment for welding shall be so designed and manufactured, and be in such condition as to enable qualified operators to follow procedures and to attain the results specified. Protect welders and gas cutters from the light of the arc and flame by approved goggles, shields, helmets, and gloves. Replace cover glasses in helmets and shields when they become sufficiently marred to impair the operator's vision. Take care to avoid risk of explosion and fire when welding and gas cutting near explosive or flammable materials. Ventilate welding and gas cutting operations in accordance with paragraph 29 CFR 1910-SUBPART Q.

d. Surface Conditions: Do not weld when atmospheric temperature is less than zero degrees F, when surfaces are wet, when rain or snow is falling or moisture is condensing on surfaces to be welded, nor during periods of high wind, unless the welder and work are protected properly. At temperatures between 32 degrees F and zero degrees F heat with a torch the surface for an area within 3 inches of the joint to be welded to a temperature warm to the hand before welding. Free surfaces to be welded from loose scale, slag, rust, paint, oil, and other foreign material. Joint surfaces shall be smooth, uniform and free from fins, tears, and other defects which might affect proper welding. Remove slag from flame-cut edges to be welded by grinding, but temper color need not be removed. Thoroughly clean each layer of weld metal by wire brushing prior to inspection or deposition of additional weld metal.

3.1.2.9 Cleaning of Piping

Before installing pipe, thoroughly clean it of sand, mill scale and other foreign material. After erection but before final connections are made to apparatus thoroughly clean the interior of piping. Flush with water piping except air and fuel lines, in addition, blow out steam lines with intermittent high pressure steam blows to promote shedding of internal scale. Blow compressed air and fuel oil lines clean with 80 to 100 psig air dried to a 35 degree F dew point at 80 psig. Sterilize potable water piping by means of liquid chlorine or hypochlorite in accordance with AWWA C651 before placing water system in service. Take care during fabrication and installation, to keep piping, valves, fittings and specialties free of loose welding metal chips of metal or slag, welding rods and other foreign matter. Blowing or flushing shall in no case be

channeled through equipment, pump, control valve, regulating valve, instrument gage or specialty in the system. Provide temporary screens, strainers, connections, spool pieces and bypasses consisting of piping or hoses, pumps and other required equipment temporarily installed for the purpose of cleaning and flushing piping. Drain flushing water and test water to the sanitary sewer system.

3.1.2.10 Reduction in Pipe Size

Provide reducing fittings for changes in pipe size; the use of bushings will not be permitted. In horizontal steam lines, reducing fittings shall be the eccentric type to maintain the bottom of the lines in the same plane. In horizontal water mains, reducers shall be set to maintain the top of the lines in the same plane.

3.1.2.11 Expansion Control

Provide bends, loops, and offsets wherever practical to relieve overstressed piping systems due to thermal expansion and to provide adequate flexibility. Cold spring piping system as indicated but not more than 50 percent of the total linear expansion.

3.1.2.12 Connection to Equipment

Provide unions or flanges where necessary to permit easy disconnection of piping and apparatus. Provide unions or flanges and gate valves at each connection to threaded end control valves, strainers and equipment.

3.1.2.13 Valve Installation

Install valves in positions accessible for operation and repair. Install stems in a vertical position with handwheels or operators on top or in a horizontal position. Do not install handwheels on stop valves below the valve. When centerline of valve is more than 7 feet above floor or platform, provide valve with a chain-operated handwheel. When valve is motorized, provide hand operation for emergency use.

a. Gate Valves: Arrange back outlet gate valves for turbine exhaust for hand operation and provide with a floor stand.

b. Globe Valves: Pressure shall be below the disc. Install globe valves with the stems horizontal on steam and exhaust lines, when better drainage is required or desired.

c. Steam Pressure-Reducing Valves: Provide the steam line entering each pressure-reducing valve with a strainer. Provide each pressure-reducing valve unit with two shutoff valves and with a globe or angle bypass valve and bypass pipe. A bypass around a reducing valve shall be of reduced size to restrict its capacity to approximately that of the reducing valve. Provide each pressure-reducing valve unit with indicating steam gages to show the reduced pressure and the upstream pressure and an adequately sized safety valve on the low pressure side.

d. Valve Tags and Charts: Permanently tag each valve with a black and white engraved laminated plastic tag showing valve number, valve function and piping system and whether another valve must be opened or closed in conjunction with this valve. Provide a typed chart which will show the required valve tagging plus the location of each valve.

Frame valve charts under glass and install as directed.

3.1.2.14 Traps and Connections

Traps shall be of the type and capacity for the service required, and shall be properly supported and connected. Except for thermostatic traps in pipe coils, radiators, and convectors, install traps with a dirt pocket and strainer between it and the piping or apparatus it drains. When it is necessary to maintain in continuous service apparatus or piping which is to be drained, provide a three valve bypass so that trap may be removed and repaired and condensate drained through the throttled bypass valve. Provide a check valve on discharge side of trap whenever trap is installed for lift or operating against a back pressure, or it discharges into a common return line. Provide test connections on discharge side of high and medium pressure traps when they are specifically required. Test connection shall include a 1/2 inch globe valve with open blow.

3.1.2.15 Pressure Gage Installation

Provide with a shutoff valve or petcock between the gage and the line, and gage on steam lines shall have a siphon installed ahead of the gage.

3.1.2.16 Thermometer and Sensing Element Installation

Provide thermometers and thermal sensing elements of control valves, with a separable socket. Install separable sockets in pipe lines in such a manner to sense flowing fluid temperature and minimize obstruction to flow.

3.1.2.17 Strainer Locations

Provide strainers with meshes suitable for the services upstream of each control valve and where dirt might interfere with the proper operation of valve parts, orifices, or moving parts of equipment.

3.1.2.18 Dissimilar Piping Materials

Provide dielectric unions or flanges between ferrous and nonferrous piping, equipment, and fittings, except that bronze valves and fittings may be used without dielectric couplings for ferrous-to-ferrous or nonferrous-to-nonferrous connections. Dielectric fittings shall utilize a nonmetallic filler which will prevent current flow from exceeding one percent of the short circuit current. Spacer shall be suitable for the pressure and temperature of the service. Fittings shall otherwise be as specified in this section.

3.1.2.19 Surface Treating, and Pipe Wrapping

Uninsulated steel piping buried in the ground shall have exterior surfaces protected with a tape wrapping system or a continuously extruded polyethylene coating system.

3.1.3 Painting

3.1.3.1 Piping, Fittings, and Mechanical and Electrical Equipment

Equipment shall be factory finished to withstand the intended end use environment in accordance with the specifications for particular end item. Factory finished equipment on which the finish has been damaged shall have damaged areas retouched and then be given a complete finish

coat to restore the finish to its original condition. Finish coat shall be suitable for exposure in the intended end use environment.

3.1.3.2 Other Items

Unless specified otherwise, pipe hangers, structural supports, pipe and pipe fittings, conduit and conduit fittings, air grilles, pipe coverings, insulation, and metal surfaces associated with mechanical and electrical equipment including zinc-coated steel ducts shall be painted utilizing the painting systems as specified in Section 09 90 00 PAINTS AND COATINGS. Zinc-coated steel duct in unpainted areas shall not be painted. Except zinc-coated and copper pipe, give piping to be insulated, a protective coating prior to installing insulation.

3.1.3.3 Boilers

After modifying and testing burners and modified boiler equipment, clean exposed surfaces of the boiler that have been disturbed to remove grease, coal dust, flyash and other foreign matter and finish with one coat of aluminum heat resisting paint applied to minimum dry film thickness of one mil.

3.1.3.4 Surfaces Not to be Painted

Unless specified otherwise, do not paint equipment having factory applied permanent finish, switchplates and nameplates, motor starters, and concrete foundations.

3.1.4 Insulation

Insulate mechanical equipment, systems and piping as specified in Section 23 07 00 THERMAL INSULATION FOR MECHANICAL SYSTEMS.

3.2 FIELD QUALITY CONTROL

Provide labor, equipment, test apparatus and materials required for preparation and performance of tests and inspections specified to demonstrate that the new auxiliary equipment as installed are in compliance with contract requirements. During startup and during tests, factory trained engineers or technicians employed by the equipment manufacturer and system suppliers or manufacturers of such components as the boiler, burner, forced draft fan, economizer, and other auxiliary equipment shall be present, to ensure the proper functioning, adjustment, and testing of the individual components and systems. The Government will furnish, when available, water, electricity and fuel for the tests, except fuel required for retesting. The Contractor shall rectify defects disclosed by the tests and retest the equipment. The Contractor's boiler plant personnel shall be experienced in starting up and operating boiler plants.

3.2.1 Tests and Inspections (Piping)

3.2.1.1 General Requirements

Examine, inspect, and test piping in accordance with ASME B31.1except as modified below. The Contractor shall rectify defects disclosed by the tests. Necessary subsequent tests required to prove system tight after additional work by the Contractor shall be provided by the Contractor. Make tests under the direction of and subject to the prior approval of the

Contracting Officer.

3.2.1.2 Hydrostatic and Leak Tightness Tests

a. Test piping systems attached to the boilers and included under the jurisdiction of the ASME BPVC SEC I in accordance with the requirement of that Code. Piping bearing ASME Code symbol stamp will be accepted only as indicating compliance with the design and material requirements of the code.

b. Test piping which is a part of the steam generation or auxiliary systems, including piping within the boiler room and external to the boiler room, by the following methods:

(1) Perform hydrostatic test at 150 percent of design pressure for welded and screwed steel piping systems except those for air, oil, and gas. Hold hydrostatic tests for a period of one hour with no pressure loss. Temperature of the testing fluid shall not exceed 100 degrees F.

(2) Test air and oil lines in accordance with the requirements of ASME B31.3 for pneumatic tests with the exception that the test pressure must be held for one hour. Examination for leaks by a soap solution or other foaming agent test.

(3) Inspection and test of gas piping shall conform to the requirements of NFPA 54.

c. For tests install a calibrated test pressure gage in the system to observe loss in pressure.

3.2.2 Preliminary Operation

The Contractor under the direction of the respective manufacturer's representative shall perform the work of placing into operation equipment provided except as specifically noted otherwise. Make adjustments to equipment that are necessary to ensure proper operation as instructed by the manufacturer of the equipment.

a. Lubricate equipment prior to operation in accordance with the manufacturer's instructions. Lubricants shall be provided by the Contractor. Contractor shall furnish lubrication gun with spare cartridges of lubricant to operating personnel.

b. Dry out motors before operation as required to develop and maintain proper and constant insulation resistance.

c. Check drive equipment couplings for proper alignment at both ambient and operating temperature conditions.

3.2.3 General Startup Requirements

Prior to initial operation of any complete system, check each component as follows:

a. Inspect bearings for cleanliness and alignment and remove foreign materials found. Lubricate as necessary and in accordance with manufacturer's recommendations. Replace bearings that run roughly or noisily.

b. Adjust direct drives for proper alignment of flexible couplings. Provide lubrication when a particular coupling so requires. Check security of couplings to driver shafts. Set drive components to ensure free rotation with no undesirable stresses present on the coupling of attached equipment.

c. Check motors for amperage comparison to nameplate value. Correct conditions that produce excessive current flow and that exist due to equipment malfunction.

d. Check speeds of each motor and driven apparatus to ensure that they are operating at the desired point.

e. Check actual suction and discharge pressure of each pump against desired performance curves.

f. Check pump packing glands or seals for cleanliness and adjustment before running each pump. Inspect shaft sleeves for scoring and proper placement of packing; replace when necessary. Ensure piping system is free of dirt and scale before circulating liquid through pumps.

g. Inspect both hand and automatic control valves. Clean bonnets and stems, tighten glands to ensure no leakage, but permit valve stems to operate without galling. Replace packing in valves that require same to retain maximum adjustment after system is judged complete. Replace entire packing in valves that continues to leak after adjustment. Remove and repair bonnets that leak. Coat packing gland threads and valve stems with a suitable surface preparation after cleaning.

h. Inspect and make certain that control valve seats are free from foreign material and are properly positioned for the intended service.

i. Check flanges and packing glands after the system has been placed in operation. Replace gaskets in flanges that show signs of leakage after tightening.

j. Inspect screwed joints for leakage and remake each joint that appears to be faulty. Do not wait for rust to form. Clean threads on both parts, apply compound and remake joint.

k. Strainers installed shall be thoroughly blown out through individual valved blow-off connection on each strainer prior to placing in operation.

l. Thoroughly blow out or dismantle and clean strainers after systems have been in operation one week. Thoroughly clean, repair, and place back in service traps or other specialties in which foreign matter has accumulated, causing malfunction or damage.

m. Adjust pipe hangers and supports for correct pitch and alignment.

n. Remove rust, scale and foreign materials from equipment and renew defaced surfaces. When equipment is badly marred, the Contracting Officer shall have the authority to request that new materials be provided.

o. Adjust and calibrate temperature, pressure and other automatic control

systems.

p. Inspect each pressure gage and thermometer for calibration, and replace those that are defaced, broken or read incorrectly.

3.2.4 Fuel Oil Tanks

3.2.4.1 Blowdown Valves and Try Cocks

Test blowdown valves and try cocks for proper operation.

3.2.4.2 Fans, Heaters, Pumps, and Motors

Test draft fans, fuel pumps, and electric motors to determine compliance with the referenced standards. Standard symbols and certifications from the referenced organization may be accepted at the discretion of the Contracting Officer. Closely observe the operation of fans, fuel pumps, and electric motors for possible defects or nonconformance.

3.2.5 Boilers and Auxiliaries Tests and Inspections

The Contractor, with qualified personnel provided by the Contractor, shall make tests and inspections at the site under direction of and subject to approval of the Contracting Officer. The respective manufacturer's representatives and consultants shall direct the Contractor's boiler plant personnel in the operation of each boiler and appurtenances through the entire testing period and shall ensure that necessary adjustments have been made. The Contractor shall notify the Contracting Officer in writing, at least 7 days in advance, indicating that equipment is ready for testing. The Contractor shall provide testing equipment, including gages, thermometers, calorimeter, flue gas analyzers, thermocouple pyrometers, fuel flow meters, water meters and other test apparatus and calibrate instruments prior to the test. Draft, fuel pressure and steam flow may be measured by permanent gages and meters installed under the contract. The Contractor is responsible for providing an analysis of the fuel being used for the tests. Control of noise levels developed by exhaust steam shall be as directed by the Contracting Officer to satisfy environmental conditions of the surrounding area. The Contractor shall perform the following tests in the sequence as listed when feasible:

a. Strength and tightness tests

b. Standards compliance tests

c. Preliminary operational tests (steady state combustion test and variable load combustion test)

d. Tests of auxiliary equipment

e. Feedwater equipment test, including economizers

f. Capacity and efficiency tests

3.2.5.1 Strength and Leak Tightness Tests

Subject economizers to the following strength and tightness tests:

a. Watersides Including Fitting and Accessories: Hydrostatically test watersides in accordance with the requirements of the ASME BPVC SEC I.

Since damage to the boiler components may have occurred during shipping, the factory ASME label will not be accepted as evidence of this test. Therefore, the final hydrostatic test must be performed after the installation of the economizer and its auxiliary components have been installed.

b. Boiler Casing, Air Casing, and Ducts: Test air casing and ducts exterior to the furnace pneumatically at the maximum working pressure using the FD and ID fans. Use the soap bubble method to verify tightness. Test gas sides of ductwork normally operated under pressure for tightness at one and one half times the predicted operating pressure in the furnace at maximum continuous output.

3.2.5.2 Boiler Inspection

The Boiler Inspector shall be on hand to witness the appropriate tests which need to be observed in order to certify the safety of the boiler. The inspection shall include the requirements of NAVFAC MO 324Inspection and Certification of Boilers and Unfired Pressure Vessels. The Boiler Inspector shall complete NAVFAC form 9-11014/40, Data Record Sheet; NAVFAC form 9-11014/41, Inspection Report; NAVFAC 9-11014/32 Inspection Certificate for each boiler after boiler has been inspected and found to be safe. No boiler may be fired until it has passed the inspection of the Boiler Inspector. Boiler inspection forms shall be submitted through the Contractor to the Contracting Officer. Place Inspection Certificate under framed glass, mounted on or near the boiler in a conspicuous location.

3.2.5.3 Economizer Cleaning Before Startup

Clean and degrease the water side of the economizers to be installed on boilers 1 and 2. Use a circulating chemical treatment process to ensure all oils and greases are removed before placing the economizer in service. Submit a proposal to the Government for this process, from a specialty cleaning company for this work prior to performing this work.

3.2.5.4 Boiler Preliminary Operational Tests

Conduct a boiler operational test on each unit continuously for two weeks. Operate one boiler at a time to demonstrate control and operational conformance to specified requirements including ability to respond to load swings from the specified capacity to minimum turndown. Conduct operational test under the supervision of a registered professional engineer or a licensed power plant operator and demonstrate operation of safeties, controls, maintenance of stable combustion at low loads, proper flame lengths and patterns to avoid flame impingement on the tubes for oil firing and gas firing, and proper mechanical and electrical functioning of systems. This test shall include items mentioned in this specification as well as items mentioned in the specification of the particular pieces of equipment. Conduct tests with factory trained combustion equipment engineers as previously specified. Test and record steam flowrates, flue gas temperature, percentages of carbon dioxide, carbon monoxide, oxygen and nitrogen in the flue gas and percent excess air for each boiler at tested load and graphically present test data in addition to the tabular presentation of test data.

3.2.5.5 General Controls Operational Tests

Conduct operational tests, performance tests, and demonstration tests with boiler controls functional and on line. No bypassing, use of jumpers, or

other disablement of control systems will be allowed unless specified elsewhere.

3.2.5.6 Steady State Combustion Tests

Test fuel burning and combustion control equipment with each of the specific fuels at the minimum limit of the turndown range and at increments of 50, 75 and 100 percent of full rated load. Each test run shall be at least two hours at each load point on each fuel and until stack temperatures are constant and capacity and efficiency requirements of this specification have been verified and recorded. Verify proper operation of instrumentation and gages during the tests.

3.2.5.7 Varying Load Combustion Tests

Test boilers continuously under varying load conditions to demonstrate proper operability of the combustion control, flame safeguard control, programming control and safety interlocks. Conduct these tests after the adjustment of the combustion controls has been completed under the steady state combustion tests. Continue the variable load operational tests for a period of at least 8 hours.

a. Sequencing: Boiler shall start, operate and stop in strict accordance with the specified operating sequence.

b. Flame Safeguard: Verify operation of flame safeguard controls by simulated flame and ignition failures. Verify the trial-for-pilot ignition, trial-for-main flame ignition, combustion control reaction and valve closing times by stop watch.

c. Immunity to Hot Refractory: Operate burner at high fire until combustion chamber refractory reaches maximum temperature. Main fuel valve shall then be closed manually. Combustion safeguard shall drop out immediately causing safety shutoff valves to close within the specified control reaction and valve closing times.

d. Pilot Intensity Required: Gradually reduce fuel supply to the pilot flame to the point where the combustion safeguard begins to drop out (sense "no flame") but holds in until the main fuel valve opens. At this point of reduced pilot fuel supply, the pilot flame shall be capable of safely igniting the main burner. When the main fuel valve can be opened on a pilot flame of insufficient intensity to safely light the main flame, the boiler shall be rejected.

e. Boiler Limit and Fuel Safety Interlocks: Safety shutdown shall be caused by simulating interlock actuating conditions for each boiler limit and fuel safety interlock. Safety shutdowns shall occur in the specified manner.

f. Combustion Controls: Demonstrate accuracy, range and smoothness of operation of the combustion controls by varying the steam demand through the entire firing range required by the turndown ratio specified for the burner system. Control accuracy shall be as specified.

3.2.5.8 Auxiliary Equipment and Accessory Tests

Observe and test economizers, fans, fuel oil pumps, electric motors, and other accessories and appurtenant equipment during operational and

capacity tests for leakage, malfunctions, defects, and for compliance with referenced standards.

3.2.5.9 Capacity and Efficiency Tests

Perform capacity and efficiency tests after satisfactorily completing operating tests and after operating boiler continuously for at least 14 days with no nuisance shutdowns and without the necessity for frequent or difficult adjustments. Perform these tests on each boiler. Conduct tests using each specified fuel. Test procedures shall be in accordance with the input-output method of ASME PTC 4. Before tests are performed, the Contracting Officer and the Contractor shall reach agreement on those items identified in ASME PTC 4, Section 3, paragraph 3.0l "Items on Which Agreement Shall be Reached." A test run shall not start until boiler and accessories have reached an equilibrium and stabilization condition for at least one hour in duration. Duration of tests shall be sufficient to record necessary data but in no case shall each run be less than 4 hours.

3.2.5.10 Test Runs

Accomplish maximum output testing by means of a single 2 hour run at maximum burner heat input rating to the boiler under test. Calculate boiler efficiency, using the input-output and heat loss methods, from the consistent readings taken during the runs. Make runs at four different loads 30, 50, 70, and 100 percent of boiler rating during which take both heat loss and input-output data. Predict unmeasured losses used in conjunction with heat loss calculations and include with equipment data when submitted for approval. Subsequent tests required because of failure of equipment to perform adequately during specified capacity and efficiency tests shall be financial responsibility of the Contractor, including fuel cost.

3.2.5.11 Fuel Analysis

When analysis of fuel being burned during performance tests vary from that specified as the performance fuel the guarantees shall be adjusted in accordance with accepted engineering practice to determine compliance. Carbon loss shall be determined in accordance with ABMA Boiler 103, American Boiler Manufacturers Association curves for carbon loss.

3.2.5.12 Temporary Waste Steam Connection

When necessary to obtain sufficient load for these tests, provide a temporary steam line at a point outside of the building. Provide necessary pipe, fittings, supports, anchors and appurtenances including a silencer as directed by the Contracting Officer. Remove temporary piping and silencer after tests have been satisfactorily completed.

3.2.5.13 Fire Safety for Oil-fired Boilers

Conduct tests as necessary to determine compliance with the applicable UL Safety Standards. The presence of the applicable Underwriters' label will be accepted as evidence of compliance in this respect.

a. Oil-Fired Boilers: Oil fired boilers shall meet test requirements of UL 726.

b. Oil Burners: Oil burners shall meet test requirements of UL 296.

3.2.5.14 Plant Acceptance Operation

After satisfactory completion of tests specified, operate the complete plant including each boiler, and subsystems for a period of 30 continuous 24 hour operational days prior to final acceptance by the Government. Furnish test equipment and apparatus; the Government will furnish fuel, electricity and water. During this 30 day period, furnish readily available, the services of qualified representatives from manufacturers of plant components and systems for the purpose of additional operational assistance, component and system adjustment and repairs. Government personnel will observe Contractor's operational procedures. The Contractor's representatives shall be prepared to answer pertinent questions from the Government, about the plant operation.

3.2.6 Manufacturer's Field Services

3.2.6.1 Erection/Installation Supervisors and Service Engineers

a. Burners: Furnish the services of a competent supervisor who is in the direct employ of the Contractor. This supervisor shall remain on the construction site the full 8 hours per day, 5 days per week, or the same hours, that the project installation takes place. This supervisor shall be responsible for the complete project, including the steam generator, forced draft fan, burner and other related work, such as refractory, or insulation regardless of whether the forced draft fan, burner or the other related items of work are furnished by manufacturers other than the boiler manufacturer. A service engineer in the employ of the burner manufacturer shall advise on the erection and installation of the equipment and shall be on the construction site for startup of each burner system.

b. Fans: The Contractor shall furnish a company service engineer to advise on the erection or installation of FD, ID, and FGR fans and related equipment.

c. Service Engineers: Services of the Controls Contractor that provided and services the existing plant control system and each burner management system shall be engaged to: (1) verify all field connections of control wiring changed during the project; (2) update all control software to operate with the new equipment provided by this project; (3) Start up the boilers with the new fans and burners and (4) tune the new burners to the operate in the boilers with maximum efficiency and minimum emissions.

3.2.6.2 Boiler and System Representatives

a. Furnish factory trained engineers or technicians who are representatives of the system suppliers to supervise testing of the new equipment.

b. Furnish the services of a Boiler Inspector who is qualified and certified as such by the National Board of Boiler and Pressure Vessel Inspectors and who is presently employed full time by a firm, such as Hartford Steam Boiler Inspection and Insurance Company, which has a business of inspecting boilers.

3.2.6.3 Instruction to Government Personnel

In accordance with the provisions of Section 23 03 00.00 20 BASIC

MECHANICAL MATERIALS AND METHODS, supervisors and service engineers shall provide instruction for the Government's operators in the operation and maintenance of the equipment furnished under this section. The minimum number of hours of instruction provided shall be as follows:

Equipment	Operation Instruction	Maintenance Instruction
Burners and BMS System Changes	16 Hours	16 Hours
Forced draft fans, induced draft fans, and flue gas recirculation fans	8 hours	8 hours
Fuel handling system; gas and fuel oil	8 Hours	8 Hours

3.3 CLOSEOUT DOCUMENTS

Provide Contractor Drawing Markups which shall be incorporated into Record Drawings.

-- End of Section --

SECTION 26 00 00.00 20

BASIC ELECTRICAL MATERIALS AND METHODS
07/06

PART 1 GENERAL

1.1 REFERENCES

The publications listed below form a part of this specification to the extent referenced. The publications are referred to in the text by the basic designation only.

ASTM INTERNATIONAL (ASTM)

ASTM D709	(2013) Laminated Thermosetting Materials

INSTITUTE OF ELECTRICAL AND ELECTRONICS ENGINEERS (IEEE)

IEEE 100	(2000; Archived) The Authoritative Dictionary of IEEE Standards Terms
IEEE C2	(2012; Errata 1 2012; INT 1-4 2012; Errata 2 2013; INT 5-7 2013; INT 8-10 2014; INT 11 2015) National Electrical Safety Code
IEEE C57.12.28	(2014) Standard for Pad-Mounted Equipment - Enclosure Integrity
IEEE C57.12.29	(2014) Standard for Pad-Mounted Equipment - Enclosure Integrity for Coastal Environments

NATIONAL ELECTRICAL MANUFACTURERS ASSOCIATION (NEMA)

NEMA 250	(2014) Enclosures for Electrical Equipment (1000 Volts Maximum)

NATIONAL FIRE PROTECTION ASSOCIATION (NFPA)

NFPA 70	(2014; AMD 1 2013; Errata 1 2013; AMD 2 2013; Errata 2 2013; AMD 3 2014; Errata 3-4 2014; AMD 4-6 2014) National Electrical Code

1.2 RELATED REQUIREMENTS

This section applies to certain sections of Division 02, EXISTING CONDITIONS and Divisions 22 and 23, PLUMBING and HEATING VENTILATING AND AIR CONDITIONING. This section applies to all sections of Division 26 and 33, ELECTRICAL and UTILITIES, of this project specification unless specified otherwise in the individual sections. This section has been incorporated into, and thus, does not apply to, and is not referenced in the following sections.

Section 26 20 00 INTERIOR DISTRIBUTION SYSTEM
Section 26 56 00 EXTERIOR LIGHTING
Section 33 71 02 UNDERGROUND ELECTRICAL DISTRIBUTION

1.3 DEFINITIONS

a. Unless otherwise specified or indicated, electrical and electronics terms used in these specifications, and on the drawings, shall be as defined in IEEE 100.

b. The technical sections referred to herein are those specification sections that describe products, installation procedures, and equipment operations and that refer to this section for detailed description of submittal types.

c. The technical paragraphs referred to herein are those paragraphs in PART 2 - PRODUCTS and PART 3 - EXECUTION of the technical sections that describe products, systems, installation procedures, equipment, and test methods.

1.4 ADDITIONAL SUBMITTALS INFORMATION

Submittals required in other sections that refer to this section must conform to the following additional requirements as applicable.

1.4.1 Shop Drawings (SD-02)

Include wiring diagrams and installation details of equipment indicating proposed location, layout and arrangement, control panels, accessories, piping, ductwork, and other items that must be shown to ensure a coordinated installation. Wiring diagrams shall identify circuit terminals and indicate the internal wiring for each item of equipment and the interconnection between each item of equipment. Drawings shall indicate adequate clearance for operation, maintenance, and replacement of operating equipment devices.

1.4.2 Product Data (SD-03)

Submittal shall include performance and characteristic curves.

1.5 QUALITY ASSURANCE

1.5.1 Regulatory Requirements

In each of the publications referred to herein, consider the advisory provisions to be mandatory, as though the word, "shall" had been substituted for "should" wherever it appears. Interpret references in these publications to the "authority having jurisdiction," or words of similar meaning, to mean the Contracting Officer. Equipment, materials, installation, and workmanship shall be in accordance with the mandatory and advisory provisions of NFPA 70 unless more stringent requirements are specified or indicated.

1.5.2 Standard Products

Provide materials and equipment that are products of manufacturers regularly engaged in the production of such products which are of equal material, design and workmanship. Products shall have been in satisfactory commercial or industrial use for 2 years prior to bid opening. The 2-year period shall include applications of equipment and materials under similar circumstances and of similar size. The product shall have been on sale on the commercial market through advertisements,

manufacturers' catalogs, or brochures during the 2-year period. Where two or more items of the same class of equipment are required, these items shall be products of a single manufacturer; however, the component parts of the item need not be the products of the same manufacturer unless stated in the technical section.

1.5.2.1 Alternative Qualifications

Products having less than a 2-year field service record will be acceptable if a certified record of satisfactory field operation for not less than 6000 hours, exclusive of the manufacturers' factory or laboratory tests, is furnished.

1.5.2.2 Material and Equipment Manufacturing Date

Products manufactured more than 3 years prior to date of delivery to site shall not be used, unless specified otherwise.

1.6 WARRANTY

The equipment items shall be supported by service organizations which are reasonably convenient to the equipment installation in order to render satisfactory service to the equipment on a regular and emergency basis during the warranty period of the contract.

1.7 POSTED OPERATING INSTRUCTIONS

Provide for each system and principal item of equipment as specified in the technical sections for use by operation and maintenance personnel. The operating instructions shall include the following:

a. Wiring diagrams, control diagrams, and control sequence for each principal system and item of equipment.

b. Start up, proper adjustment, operating, lubrication, and shutdown procedures.

c. Safety precautions.

d. The procedure in the event of equipment failure.

e. Other items of instruction as recommended by the manufacturer of each system or item of equipment.

Print or engrave operating instructions and frame under glass or in approved laminated plastic. Post instructions where directed. For operating instructions exposed to the weather, provide weather-resistant materials or weatherproof enclosures. Operating instructions shall not fade when exposed to sunlight and shall be secured to prevent easy removal or peeling.

1.8 MANUFACTURER'S NAMEPLATE

Each item of equipment shall have a nameplate bearing the manufacturer's name, address, model number, and serial number securely affixed in a conspicuous place; the nameplate of the distributing agent will not be acceptable.

1.9 FIELD FABRICATED NAMEPLATES

ASTM D709. Provide laminated plastic nameplates for each equipment enclosure, relay, switch, and device; as specified in the technical sections or as indicated on the drawings. Each nameplate inscription shall identify the function and, when applicable, the position. Nameplates shall be melamine plastic, 0.125 inch thick, white with black center core. Surface shall be matte finish. Corners shall be square. Accurately align lettering and engrave into the core. Minimum size of nameplates shall be one by 2.5 inches. Lettering shall be a minimum of 0.25 inch high normal block style.

1.10 WARNING SIGNS

Provide warning signs for the enclosures of electrical equipment including substations, pad-mounted transformers, pad-mounted switches, generators, and switchgear having a nominal rating exceeding 600 volts.

a. When the enclosure integrity of such equipment is specified to be in accordance with IEEE C57.12.28 or IEEE C57.12.29, such as for pad-mounted transformers, provide self-adhesive warning signs on the outside of the high voltage compartment door(s). Sign shall be a decal and shall have nominal dimensions of 7 by 10 inches with the legend "DANGER HIGH VOLTAGE" printed in two lines of nominal 2 inch high letters. The word "DANGER" shall be in white letters on a red background and the words "HIGH VOLTAGE" shall be in black letters on a white background. Decal shall be Panduit No. PPSO710D72 or approved equal.

1.11 ELECTRICAL REQUIREMENTS

Electrical installations shall conform to IEEE C2, NFPA 70, and requirements specified herein.

1.12 INSTRUCTION TO GOVERNMENT PERSONNEL

Where specified in the technical sections, furnish the services of competent instructors to give full instruction to designated Government personnel in the adjustment, operation, and maintenance of the specified systems and equipment, including pertinent safety requirements as required. Instructors shall be thoroughly familiar with all parts of the installation and shall be trained in operating theory as well as practical operation and maintenance work. Instruction shall be given during the first regular work week after the equipment or system has been accepted and turned over to the Government for regular operation. The number of man-days (8 hours per day) of instruction furnished shall be as specified in the individual section. When more than 4 man-days of instruction are specified, use approximately half of the time for classroom instruction. Use other time for instruction with equipment or system. When significant changes or modifications in the equipment or system are made under the terms of the contract, provide additional instructions to acquaint the operating personnel with the changes or modifications.

PART 2 PRODUCTS

2.1 FACTORY APPLIED FINISH

Electrical equipment shall have factory-applied painting systems which shall, as a minimum, meet the requirements of NEMA 250

corrosion-resistance test and the additional requirements specified in the technical sections.

PART 3 EXECUTION

3.1 FIELD APPLIED PAINTING

Paint electrical equipment as required to match finish of adjacent surfaces or to meet the indicated or specified safety criteria. Painting shall be as specified in Section 09 90 00 PAINTS AND COATINGS.

3.2 FIELD FABRICATED NAMEPLATE MOUNTING

Provide number, location, and letter designation of nameplates as indicated. Fasten nameplates to the device with a minimum of two sheet-metal screws or two rivets.

3.3 WARNING SIGN MOUNTING

Provide the number of signs required to be readable from each accessible side, but space the signs a maximum of 30 feet apart.

-- End of Section --

THIS PAGE HAS BEEN INTENTIONALLY LEFT BLANK

SECTION 26 08 10.00 22

COMMISSIONING OF ELECTRICAL SYSTEMS
08/16

PART 1 GENERAL

1.1 REFERENCES

The publications listed below form a part of this specification to the extent referenced. The publications are referred to within the text by the basic designation only.

ASSOCIATED AIR BALANCE COUNCIL (AABC)

ACG Commissioning Guideline	(2005) Commissioning Guideline

NATIONAL ENVIRONMENTAL BALANCING BUREAU (NEBB)

NEBB Commissioning Standard	(2009) Procedural Standards for Whole Building Systems Commissioning of New Construction; 3rd Edition

INTERNATIONAL ELECTRICAL TESTING ASSOCIATION (NETA)

NETA ATS	(2013) Standard for Acceptance Testing Specifications for Electrical Power Equipment and Systems

NATIONAL ELECTRICAL CONTRACTORS ASSOCIATION (NECA)

NECA/NEIS 90	(2009) Standard for Commissioning Building Electrical Systems

1.2 SUMMARY

1.2.1 General

The requirements of this section apply to all sections of Division 26. Refer to Section 01 91 13.00 22 GENERAL COMMISSIONING REQUIREMENTS FOR CONSTRUCTION for general commissioning requirements applicable to the entire project.

The purpose of this Section is to define Contractor responsibilities in the commissioning process, which are being directed by the Government. Additional electrical system testing is required under some Division 27, and 33 Specification Sections. NECA/NEIS 90 provides additional guidance for the commissioning of electrical systems.

This Section includes Commissioning process requirements for electrical systems, assemblies, components and equipment, and requires the participation of the Contractor, to ensure that the work has been completed as specified and that systems are functioning in the manner consistent with the Contract Documents as described herein, and as specified in the system operating criteria for this project.

a. Commissioning will commence according to the approved construction schedule, after electrical system rough-in, and after the preliminary

inspection punchlist items and commissioning deficiencies are completed by the Contractor.

b. Construction phase commissioning process shall include the following:

1. Step One: Installation Verification.

2. Step Two: System Startup.

3. Step Three: Functional Performance Testing.

The electrical commissioning process includes the following tasks:

a. Testing and startup of electrical equipment and systems.

b. Electrical equipment and system verification checks.

c. Assistance in functional performance testing to verify equipment and system performance.

d. Provide qualified personnel to assist in commissioning tests, including seasonal testing.

e. Complete and endorse construction phase checklists provided by Commissioning Authority (CxA) to assure equipment and systems are fully operational and ready for functional performance testing.

f. Provide equipment, materials, and labor necessary to correct deficiencies found during commissioning process and to fulfill contract and warranty requirements.

g. Provide operation and maintenance information and record drawings to Commissioning Authority for review verification and organization, prior to distribution.

h. Provide assistance to CxA to develop, edit, and document system operation descriptions.

i. Provide training for systems specified in this Section, coordinated with the CxA.

The commissioning process will also be used to develop test protocol and record the associated test data in an effort to advance the building electrical systems from a state of substantial completion to a full dynamic operation.

The commissioning process is also intended to assist the Government's operating and maintenance staff in the training and familiarization with new electrical systems and equipment. The Commissioning Plan and final Commissioning Report should also serve as tools to reduce post-occupancy critical systems operational difficulty or failure. Operational staff training is essential to the commissioning process and will run concurrently with Steps One through Three referenced above.

The commissioning required by this section is intended to supplement the inspection, testing, and training requirements contained in the technical sections and to consolidate the reports required by those sections. Duplication of the inspection, testing and training required by the technical sections is not required. This section does include additional

commissioning requirements.

1.3 DEFINITIONS

Refer to Section 01 91 13.00 22 GENERAL COMMISSIONING REQUIREMENTS FOR CONSTRUCTION, Article "Definitions" for definintions applicable to this section.

1.4 COMMISSIONING SUBMITTAL REQUIREMENTS

Commissioning Authority (CxA) shall prepare Commissioning Plan, Prefunctional Checklists, Functional Performance Test (FPT) procedures, narrative descriptions of the design intent for each of the systems identified, and the Commissioning Report, and execute and document results.

a. Contractor shall provide CxA with documentation required for Commissioning Work. At minimum, documentation shall include: detailed start-up procedures, full sequences of operation, Operating and Maintenance data and performance data, control drawings, and details of Government-contracted tests.

b. Contractor shall submit to CxA the manufacturers' installation and checkout materials actually shipped inside equipment and actual field checkout sheet forms used by factory or field technicians.

c. Contractor shall review and approve other relative documentation for impact on FPT's of the systems:

    1. Verify manufacturer's installation instructions are followed by completing the prefunctional checklists for all electrical equipment.

    2. Factory Performance Test Reports: Review and compile all factory performance data to assure that the data is complete prior to executing the FPT's.

    3. Completed equipment Start-up certification forms along with the manufacturer's field or factory performance and Start-up test documentation: Subcontractor performing the test will review the documentation prior to commencing with the scheduled FPT's. Government may require that system one-line diagrams and applicable Specification Section(s) be attached to the FPT documentation.

    4. Operating and Maintenance (O&M) information per requirements of the Technical Specifications and Division 01 requirements: To validate adequacy and completeness of the FPT, the Contractor shall ensure that the O&M manual content, marked-up record Drawings and Specifications, component submittal drawings, and other pertinent documents are available at the Project Site for review.

1.5 SYSTEMS TO BE COMMISSIONED

1.5.1 Electrical (Divisions 26 and 33)

The following systems shall be commissioned as part of this project.

a. Section 26 20 00 INTERIOR DISTRIBUTION SYSTEM

1. Motor Control Centers.

2. Distribution and Branch Circuit Panelboards.

3. Normal Power Distribution Systems: Building grounding system tests, coordination study review, major circuit breaker settings, meters and gages, receptacles, switches, and controls, etc.

b. Section 26 56 00 EXTERIOR LIGHTING.

1. Lighting Fixtures and Controls: Photocells, time switches, controls, contactors, fixture aiming, etc.

1.5.2 Communications (Divisions 27 and 33)

The following systems shall be commissioned as part of this project:

a. Section 27 21 01.00 20 VIDEO INTERCOMMUNICATION SYSTEM.

1. Speaker volume and background noise and video quality - i.e. hiss or similar interference, video artifacts, brightness, contrast, color balance, juddering, etc.

1.6 COMMISSIONING RESPONSIBILITIES

1.6.1 Electrical Installer Commissioning Responsibilities

a. Attend commissioning meetings, preinstallation meetings and other project meetings scheduled to facilitate the commissioning process.

b. Provide manufacturer's data sheets and shop drawings for equipment to be commissioned. Provide instructions and demonstrations for Government personnel. Provide additional requested documentation to the CxA for the development of Prefunctional Checklists and Functional Performance Test procedures.

c. Ensure subcontractors perform assigned commissioning responsibilities as specified herein.

d. Ensure participation of equipment manufacturers in appropriate startup, testing, and training activities when required by individual equipment specifications and/or the Commissioning Plan.

e. Develop startup and initial checkout plan using manufacturer's startup procedures and prefunctional (construction) checklists for equipment and systems to be commissioned.

f. During verification check and startup process, execute electrical related portions of checklists for equipment and systems to be commissioned.

g. Perform and document completed installation checklists, startup checklists and reports, and system operational checkout procedures, providing copy to CxA.

h. Where specified in the technical sections, provide manufacturer's representatives to execute starting of equipment. Ensure representatives are available and present during agreed upon schedules

and are in attendance for duration to complete tests, adjustments and problem-solving.

i. Coordinate with equipment manufacturers to determine specific requirements to maintain validity of warranties.

j. Provide personnel to assist CxA during equipment or system verification checks and functional performance tests.

k. Prior to functional performance tests, review test procedures to ensure feasibility, safety and equipment protection and provide necessary written alarm limits to be used during tests.

l. Prior to startup, inspect, check, and verify correct and complete installation of equipment and system components for verification checks included in commissioning plan. When deficient or incomplete work is discovered, ensure corrective action is taken and re-check until equipment or system is ready for startup.

m. Provide factory supervised startup services for equipment and systems where specified. Coordinate work with manufacturer and CxA.

n. Perform verification checks and startup on equipment and systems as specified.

o. Assist CxA in performing functional performance tests on equipment and systems as specified.

p. Assist in performing operation and maintenance training sessions scheduled by the Contractor.

q. Conduct electrical system orientation and inspection.

1.6.2 Electrical Testing Agency (ETA) Commissioning Responsibilities:

When requested by Government, Contractor shall retain an independent Electrical Testing Agency (ETA) for the purpose of checking and testing of the electrical power distribution equipment per National Electrical Testing Association (NETA). Commissioning responsibiliteis shall include:

a. Attend commissioning meetings.

b. Obtain all required manufacturer's data to facilitate tests.

c. Provide assistance to the CxA in the completion of the specific prefunctional checklists and functional performance test procedures. Generally, ETA shall provide their standard forms to document the NETA tests to be incorporated into the Prefunctional Checklist and Functional Performance Tests record.

d. During related tests, execute and document the tests in the approved forms and/or test record.

e. Perform and clearly document all completed Start-up and system operational checkout procedures, providing a copy to the Contractor.

f. Clearly indicate any deficiencies identified during testing and add to an action list for resolution and tracking. The field technicians shall keep a running log of events and issues. Submit reports of

discrepancies, deficient or uncompleted work by others, Contract interpretation requests and lists of completed tests to the Contractor at least twice a week and provide technical assistance in the resolution of deficiencies.

g. Provide skilled technicians to execute testing. Ensure that they are available and present during the agreed-upon schedules and for sufficient duration to complete the necessary tests, adjustments and problem solving.

h. Perform thermographic imaging of loaded panel at time designated by Contractor.

1.7 SEQUENCING AND SCHEDULING

Begin the work described in this Section only after all work required in related Sections has been successfully completed, and all test and inspection reports and operation and maintenance manuals required in these Sections have been submitted and approved. Pre-functional (construction) checklists shall be performed for the installation of electrical equipment at appropriate times during the construction phase of the Contract.

PART 2 PRODUCTS

2.1 GENERAL

All materials shall meet or exceed all applicable referenced standards, federal, state and local requirements, and conform to codes and ordinances of authorities having jurisdiction.

2.2 TEST EQUIPMENT

Provide all specialized tools, test equipment and instruments required to execute Start-up, checkout, and testing of equipment.

All specialized tools, test equipment, and instruments required to execute Start-up, checkout, and testing of equipment shall be of sufficient quality and accuracy to test and/or measure system performance within specified tolerances. A testing laboratory must have calibrated test equipment within the previous twelve (12) months. Calibration shall be NIST traceable, and shall be in accordance with the requirements of the NEBB Commissioning Standard or the ACG Commissioning Guideline. Contractor must calibrate test equipment and instruments according to manufacturer's recommended intervals and whenever the test equipment is dropped or damaged. Calibration tags must be affixed to the test equipment or certificates readily available.

Infrared Thermographic Scanner: Infrared scanning equipment shall be an AGA (or approved equal) thermovision set capable of viewing an entire bus or equipment assembly at one time and have a sensitivity of 0.2 degrees C with a liquid nitrogen reference.

PART 3 EXECUTION

3.1 GENERAL

The Contractor shall be responsible for performing procedures presented in the specifications, and as indicated on the contract drawings and as detailed in the Functional Performance Tests (FPT) procedures. Members of

the designated Commissioning Team shall witness various portions of the commissioning process. Responsibilities for these activities are listed in the following paragraphs. Commissioning Team members shall sign-off on appropriate sections after verifying installation, operation, or documentation. Final sign-off shall be by the Government and the Commissioning Authority (CxA).

Any test ports, gauges, test equipment, etc., needed to accomplish the functional performance tests shall be provided by the Contractor.

The Contractor shall provide to the Commissioning Team documentation of calibration of controls. Documentation shall include dates, setpoints, calibration coefficients, control loop verification, and other data required to verify system check-out. Documentation shall be dated and initialed by field engineer or technician performing the work.

3.2 COMMISSIONING PLAN

The commissioning plan will be developed by the third party CxA and submitted to the Government for approval. The approved commissioning plan outlines the organization, scheduling, team members, and documentation pertaining to the overall commissioning process.

3.3 CONSTRUCTION CHECKLIST

A checklist shall be developed by the CxA for each component of commissioned equipment and systems to ensure that the specified equipment has been provided, is properly installed, and has been initially started and checked out adequately in preparation for full operation and functional testing (e.g., belt tension, fluids topped, labels affixed, gages in place, sensors calibrated, voltage balanced, rotation correct, etc.).

The CxA for this project shall develop 'Construction Checklists' for this project, which shall be reviewed and approved by the Government; and then provided to, and completed by the Contractor to ensure that all equipment and systems are installed properly; have been started up preliminarily, and are ready for commissioning and performance verification testing.

3.4 FUNCTIONAL PERFORMANCE TEST (FPT) PROCEDURES

The FPT procedures at a minimum shall consist of the following sections:

a. Narrative Description: Provide a narrative description of the design intent of each of the electrical systems to be tested, their intended modes and sequences of operation.

b. Testing Prerequisites: Provide verification and documentation that primary systems that support or interact with the system that the FPT has been prepared for are completed, tested and operational.

c. Installation Verification: Provide verification that the system installation is completed and is ready for commissioning.

d. Commencement of Functional Performance Testing: Record the date and time of the start of system commissioning.

e. System Condition Prior to Staring Performance Testing: Record the current set points and parameters of the system at the start of

commissioning.

f. Functional Performance Test: This section shall provide the following:

1. Sequential steps required to set parameters and conditions required to test components and functions throughout intended ranges of operation.

2. Full range of checks and tests carried out to determine if connections, components, subsystems, systems and interfaces between systems function in accordance with the contract documents and design intents.

3. All modes and sequences of control operations, interlocks and conditional control responses and specified responses to abnormal emergency conditions.

g. End of Functional Performance Test: Record the date and time of the completion of system commissioning.

h. Field Notes: Provide a copy of the notes and remarks made and documented during system commissioning.

i. List systems modifications, not required by the Contract Documents, but provided by the Contractor. List other questions regarding such system modifications.

j. List problems discovered during Commissioning that were corrected.

k. List problems discovered during Commissioning that were not corrected.

l. List recommended party that should take action on these 'uncorrected' problems.

The CxA for this project shall develop 'Functional Performance Test' (FPT) procedures for this project, which shall be reviewed and approved by the Government; and then provided to, and completed by the Contractor under the supervision of the CxA, to ensure that all equipment and systems are installed properly; have been started up preliminarily, and are ready for commissioning and performance verification testing.

3.5 OPERATIONAL AND MAINTENANCE STAFF TRAINING

System narrative descriptions will be prepared by the CxA and supported by flow diagrams, one line diagrams, and appropriate specification sections for major systems to be commissioned. The CxA will coordinate "system description" meetings with members of facility management and maintenance department groups to review system description documentation. The meetings will provide an overview of major system features, components, and arrangements.

The Contractor and associated manufacturer's representatives shall provide the required training to the Government's operational staff after the system description meetings have occurred. These Contractor training sessions for Government personnel shall provide a more detailed analogy of systems operation and maintenance. Coordinate this training with that required in the technical specification sections.

3.6 DOCUMENTATION

The Contractor shall be responsible for collection of pertinent data during system installation, inspection and checkout; during system start-up; and during functional performance testing. The Contractor shall submit to the CxA documentation of all construction inspections, startup procedures and results, as well as any tests performed prior to and after system start-up. Documentation shall also include the equipment manufacturer's start-up procedures as reviewed and approved by Commissioning Team, including startup reports for equipment and systems conducted by a factory-certified technician or engineer, as specified in the Division 26, 27, and 33 Sections for this project.

Provide a title sheet for each section and list the following:

a. Section Title and Specification Section Name and Number requiring this submittal.

b. Project name, project number, and address.

c. Contractor and subcontractor names, addresses, and phone numbers.

d. Name, title, signature, and date of person making the submittal.

e. Table of Contents for each Section.

f. Name of Command, a blank line for signature, and the name and title of person accepting the submittal, and the date accepted by signature.

g. Name, address, and phone number of CxA. Include a blank line for signature; and date of person accepting the submittal.

Provide a Table of Contents for multiple submittals. List each submittal and page number. Number each page, centered on the bottom in sequential numerical order.

3.6.1 STEP ONE - INSTALLATION VERIFICATION

General Commissioning Responsibilities:

a. Before system start-up begins, the Commissioning Team shall conduct a final installation verification audit. The Contractor shall be responsible for completion of work including change orders and punch list items to the Government's satisfaction. The audit shall include, but not be limited to, checking of:

    1. Provide documentation of all prestart-up tests performed, including manufacturer's factory tests.

    2. Verify integrated performance of all components, including control system components and all interlocks and interactions with other equipment and systems.

    3. Verify all alarm and high and low limit functions and messages generated on all points with alarm settings.

    4. All safety trips shall require a manual reset to allow a system restart.

5. Verify shut down and restart capabilities both for scheduled and unscheduled events (e.g. power failure recovery and normal scheduled start/stop).

6. Verify time of day schedules and setpoints.

7. Verify all energy saving control strategies.

8. Verify that monitoring system graphics are representative of the systems and that all points and control elements are in the same location on the graphic as they are in the field.

9. Verify operator control of all commandable control system points including proper security level access.

b. If work is found to be incomplete, incorrect, or non-functional, the Contractor shall correct the deficiencies before system start-up work proceeds.

3.6.2 STEP TWO - SYSTEM START-UP

General Commissioning Responsibilities: With the assistance of the CxA, a start-up plan shall be developed by the Contractor. The start-up plan shall include all electrical equipment. The Contractor shall submit the equipment start-up plan to the Government for approval. Start-up plan shall include the following:

a. The CxA shall review the respective prefunctional checklists to provide guidance and comments for the startup plans.

b. The CxA shall obtain from the Contractor the equipment manufacturer's installation, startup and checkout data, including actual field checkout/startup sheets used by the equipment manufacturer's startup technicians.

c. The CxA shall copy all pages of the equipment manufacturer's installation instructions and startup manuals with important instructional data and procedures from the startup and checkout manuals not covered elsewhere in the manufacturer's equipment installation and checkout sheets.

d. The pages referenced above, along with the respective startup data from the prefunctional checklist provided by the CxA, and the manufacturer's equipment installation checkout sheets become the basis for the equipment "Startup and Checkout Plan" for each individual piece of equipment, developed by the Contractor.

e. For systems that may not have adequate manufacturer startup and checkout procedures, particularly for components being integrated with other equipment, the Contractor shall provide the added necessary detail and documentation to the CxA for information and review, prior to execution.

f. The CxA shall review the individual equipment "Startup and Checkout Plans", compile this information into a "full Startup and Checkout Plan", and then transmit same to the Contractor. The Contractor will designate which trade or subcontractor is responsible to fill out each line item on the prefunctional (construction) checklists from the CxA, and support the startup and checkout of each piece of equipment. The

Contractor shall then transmit the full start-up plan to the Subcontractors for their review and use.

3.6.2.1 Thermographic Scanning

a. Contractor shall provide thermographic scanning on all switchgear, switchboards, motor control centers, and distribution panels. In general, the thermographic scanning shall be made when the equipment is energized and is operating at its normal capacity. It is intended that the scan be made after the equipment has been in full operation; however, the Contractor, near the completion of the Project, will determine the exact time of conducting the scan. Some scanning for occupant-created load shall be performed during the Warranty Period as a Deferred Test.

b. Test equipment, miscellaneous tools, and materials shall be transported properly, moved, and set up by trained personnel. Equipment used in testing shall be capable of performing all recommended procedures required by the apparatus and related equipment. All test equipment shall have certification of calibration and be in working order.

c. All hot spots shall be marked, identified, and an infrared thermographic scanning report prepared and furnished to the Owner.

d. The report shall contain infrared photos of trouble spots with temperature readings.

e. The Contractor shall promptly report all sources of heating problems to the Owner for corrective action.

3.6.2.2 Grounding Systems

a. Provide grounding system tests as required in the technical specification sections.

3.6.2.3 AC Motors - General Across Systems

a. Verify proper alignment, installation, and rotation.

b. Measure the insulation resistance, phase balance, and resistance to ground.

c. Verify that properly sized overloads are in place.

d. Measure voltage available to all phases at time of initial connection and again after motor has been placed in operation. Measure current and speed (RPM) under load conditions.

e. Record all motor nameplate data.

3.6.2.4 Lighting Fixtures and Lighting Controls

a. Start-up checklists: Perform the following final checks before Start-up:

1. Ensure all labeling is affixed and accurate.

2. Verify quantity, type and location of fixtures.

3. Verify type and location of switches.

4. Ensure all terminations are tight.

5. Check sensor placement is adequate for required duty.

6. Ensure adequate access is provided to all panels and that documentation of that panel is provided in it.

7. Ensure all circuits for the loads are energized and ready for testing.

b. Starting Procedures: Follow the manufacturer's written procedures and the following as a minimum:

1. Test, calibrate, and set all digital and analog sensing, and actuating devices.

   (a) Calibrate each instrumentation device by making a comparison between the graphic display and the reading at the device, using an instrument traceable to the National Bureau of Standards, which shall be at least twice as accurate as the device to be calibrated (e.g., if field device is +/-0.5 percent accurate, test equipment shall be +/-0.25 percent accurate over same range).

   (b) Record the measured value and displayed value for each device in the Prefunctional Checklist.

   (c) Check each digital control point by making a comparison between the control command at the control panel and the status of the controlled device.

   (d) Check each digital input point by making a comparison of the state of the sensing device and the display.

   (e) Record the results for each device in the Building Automation System Start-up checklist.

2. Verify operation of lighting controls (dimming, photo-control, regular switching).

3. Check loads on all breakers to ensure that the breaker is properly sized.

4. Enter all schedules per occupant's direction.

5. For operator interfaces, verify all elements on the graphics are functional and properly bound to physical devices and/or virtual points and that hot links or page jumps are functional and logical.

6. Output all specified reports for review and approval.

7. Verify the alarm printing and logging is functional and per requirements.

8. Validate all interfaces with other systems on a point by point basis.

c. Provide inspection, testing and training as required in Section 26 56 00 EXTERIOR LIGHTING.

3.6.3 STEP THREE - FUNCTIONAL PERFORMANCE TESTING

General Commissioning Responsibilities: Functional Performance Testing begins after operational testing, adjusting, and balancing of the systems have been completed by the Contractor. Ideally, the Commissioning training for Government operators and maintenance personnel, including the description of the systems, as well as the hands-on training sessions will also have been completed.

a. When testing procedures for commissioned equipment are listed in NETA ATS the NETA test procedures shall be part of the testing requirements of this specification. Additional testing procedures may be listed in this specification.

b. For the conditions, sequences and modes tested, the equipment, integral components and related equipment shall respond to varying loads and changing conditions and parameters appropriately as expected, according to the sequences of operation, as specified, according to acceptable operating practice and the manufacturer's performance specifications. Verify equipment operates within tolerances specified in: governing codes, acceptance criteria contained in the construction documents, manufacturer's literature and according to good operating practice.

c. Electrical Controls Sequences: Verify functionality and compliance with the design intent for each individual sequence module in the sequences of operation. Verify proper operation of all control strategies, energy efficiency and self-diagnostics features by stepping through each sequence and documenting equipment and system performance. Test every step in every written sequence and other significant modes, sequences and operational features not mentioned in written sequences; including startup, normal operation, shutdown, scheduled on and off, unoccupied and manual modes, safeties, alarms, over-rides, lockouts and power failure.

d. Systems shall accomplish their intended function and performance.

e. Resetting a manual safety shall result in a stable, safe, and predictable return to normal operation by the system.

f. Safety circuits and permissive control circuits shall function in all possible combinations of selector switch positions (hand, auto, inverter, bypass, etc.).

g. Scheduled Lighting Controls:

1. Apply the applicable common testing requirements and acceptance criteria.

2. Test Methods. Utilize active testing, and trending when available. If able to trend, trend all zones over a week period and follow the trending guidelines in Section 01 91 13.00 22 GENERAL COMMISSIONING REQUIREMENTS FOR CONSTRUCTION.

3. Sampling Strategy. Manually test 20 percent of the zones or at least four. If more than 10 percent or two zones fail, test

another 10 percent sample. If the second sample fails the Contractor shall document retesting on all zones on their own using a Commissioning Authority approved form.

h. Occupancy Sensor Lighting Controls:

1. Apply applicable common testing requirements and acceptance criteria.

2. Test all units functions, including sensor sensitivity and time-to-OFF functions and ensure that sensor location is proper and won't be tripped inadvertently by other occupants and movements outdoors, etc.

3. Test Methods: Utilize active test methods.

4. Sampling Strategy. Test 10 percent of the sensors or six, whichever is greater. If more than 10 percent or two sensors fail, test another 10 percent sample. If the second sample fails the Contractor shall document retesting on all units on their own using a Commissioning Authority approved form.

5. Additional Acceptance Criteria. Reasonable sensitivity, no inadvertent trips, lights go off within 15 seconds of design.

-- End of Section --

SECTION 26 20 00

INTERIOR DISTRIBUTION SYSTEM
02/14

PART 1 GENERAL

1.1 REFERENCES

The publications listed below form a part of this specification to the extent referenced. The publications are referred to in the text by the basic designation only.

ASTM INTERNATIONAL (ASTM)

ASTM B1	(2013) Standard Specification for Hard-Drawn Copper Wire
ASTM B8	(2011) Standard Specification for Concentric-Lay-Stranded Copper Conductors, Hard, Medium-Hard, or Soft
ASTM D709	(2013) Laminated Thermosetting Materials

INSTITUTE OF ELECTRICAL AND ELECTRONICS ENGINEERS (IEEE)

IEEE 100	(2000; Archived) The Authoritative Dictionary of IEEE Standards Terms
IEEE C2	(2012; Errata 1 2012; INT 1-4 2012; Errata 2 2013; INT 5-7 2013; INT 8-10 2014; INT 11 2015) National Electrical Safety Code

NATIONAL ELECTRICAL MANUFACTURERS ASSOCIATION (NEMA)

ANSI C80.1	(2005) American National Standard for Electrical Rigid Steel Conduit (ERSC)
ANSI C80.3	(2005) American National Standard for Electrical Metallic Tubing (EMT)
ANSI C80.5	(2005) American National Standard for Electrical Rigid Aluminum Conduit
NEMA 250	(2014) Enclosures for Electrical Equipment (1000 Volts Maximum)
NEMA FU 1	(2012) Low Voltage Cartridge Fuses
NEMA ICS 1	(2000; R 2015) Standard for Industrial Control and Systems: General Requirements
NEMA ICS 2	(2000; R 2005; Errata 2008) Standard for Controllers, Contactors, and Overload Relays Rated 600 V
NEMA ICS 4	(2015) Terminal Blocks

NEMA ICS 6	(1993; R 2011) Enclosures
NEMA KS 1	(2013) Enclosed and Miscellaneous Distribution Equipment Switches (600 V Maximum)
NEMA MG 1	(2014) Motors and Generators
NEMA MG 10	(2013) Energy Management Guide for Selection and Use of Fixed Frequency Medium AC Squirrel-Cage Polyphase Induction Motors
NEMA MG 11	(1977; R 2012) Energy Management Guide for Selection and Use of Single Phase Motors
NEMA RN 1	(2005; R 2013) Polyvinyl-Chloride (PVC) Externally Coated Galvanized Rigid Steel Conduit and Intermediate Metal Conduit
NEMA TC 2	(2013) Standard for Electrical Polyvinyl Chloride (PVC) Conduit
NEMA TC 3	(2015) Standard for Polyvinyl Chloride (PVC) Fittings for Use With Rigid PVC Conduit and Tubing
NEMA WD 1	(1999; R 2005; R 2010) Standard for General Color Requirements for Wiring Devices
NEMA WD 6	(2012) Wiring Devices Dimensions Specifications
NEMA Z535.4	(2011) American National Standard for Product Safety Signs and Labels

NATIONAL FIRE PROTECTION ASSOCIATION (NFPA)

NFPA 70	(2014; AMD 1 2013; Errata 1 2013; AMD 2 2013; Errata 2 2013; AMD 3 2014; Errata 3-4 2014; AMD 4-6 2014) National Electrical Code
NFPA 70E	(2015; ERTA 1 2015) Standard for Electrical Safety in the Workplace
NFPA 780	(2014) Standard for the Installation of Lightning Protection Systems

U.S. NATIONAL ARCHIVES AND RECORDS ADMINISTRATION (NARA)

29 CFR 1910.147	Control of Hazardous Energy (Lock Out/Tag Out)

UNDERWRITERS LABORATORIES (UL)

UL 1	(2005; Reprint Jul 2012) Standard for Flexible Metal Conduit

UL 1063	(2006; Reprint Jul 2012) Machine-Tool Wires and Cables
UL 1203	(2013; Reprint Apr 2015) UL Standard for Safety Explosion-Proof and Dust-Ignition-Proof Electrical Equipment for Use in Hazardous (Classified) Locations
UL 1242	(2006; Reprint Mar 2014) Standard for Electrical Intermediate Metal Conduit -- Steel
UL 1449	(2014; Reprint Mar 2016) Surge Protective Devices
UL 1660	(2014) Liquid-Tight Flexible Nonmetallic Conduit
UL 198M	(2003; Reprint Feb 2013) Standard for Mine-Duty Fuses
UL 20	(2010; Reprint Feb 2012) General-Use Snap Switches
UL 360	(2013; Reprint Jan 2015) Liquid-Tight Flexible Steel Conduit
UL 4248-1	(2007; Reprint Oct 2013) UL Standard for Safety Fuseholders - Part 1: General Requirements
UL 4248-12	(2007; Reprint Dec 2012) UL Standard for Safety Fuseholders - Part 12: Class R
UL 44	(2014; Reprint Feb 2015) Thermoset-Insulated Wires and Cables
UL 467	(2007) Grounding and Bonding Equipment
UL 486A-486B	(2013; Reprint Feb 2014) Wire Connectors
UL 486C	(2013; Reprint Feb 2014) Splicing Wire Connectors
UL 489	(2013; Reprint Mar 2014) Molded-Case Circuit Breakers, Molded-Case Switches, and Circuit-Breaker Enclosures
UL 498	(2012; Reprint Oct 2014) Attachment Plugs and Receptacles
UL 50	(2007; Reprint Apr 2012) Enclosures for Electrical Equipment, Non-environmental Considerations
UL 506	(2008; Reprint Oct 2013) Specialty Transformers

UL 508	(1999; Reprint Oct 2013) Industrial Control Equipment
UL 510	(2005; Reprint Jul 2013) Polyvinyl Chloride, Polyethylene and Rubber Insulating Tape
UL 514A	(2013) Metallic Outlet Boxes
UL 514B	(2012; Reprint Nov 2014) Conduit, Tubing and Cable Fittings
UL 514C	(2014; Reprint Dec 2014) Nonmetallic Outlet Boxes, Flush-Device Boxes, and Covers
UL 6	(2007; Reprint Nov 2014) Electrical Rigid Metal Conduit-Steel
UL 651	(2011; Reprint May 2014) Standard for Schedule 40 and 80 Rigid PVC Conduit and Fittings
UL 674	(2011; Reprint Jul 2013) Electric Motors and Generators for Use in Division 1 Hazardous (Classified) Locations
UL 6A	(2008; Reprint Nov 2014) Electrical Rigid Metal Conduit - Aluminum, Red Brass, and Stainless Steel
UL 797	(2007; Reprint Dec 2012) Electrical Metallic Tubing -- Steel
UL 83	(2014) Thermoplastic-Insulated Wires and Cables
UL 870	(2008; Reprint Feb 2013) Standard for Wireways, Auxiliary Gutters, and Associated Fittings
UL 943	(2006; Reprint Jun 2012) Ground-Fault Circuit-Interrupters
UL 984	(1996; Reprint Sep 2005) Hermetic Refrigerant Motor-Compressors

1.2 DEFINITIONS

Unless otherwise specified or indicated, electrical and electronics terms used in these specifications, and on the drawings, are as defined in IEEE 100.

1.3 SUBMITTALS

Government approval is required for submittals with a "G" designation; submittals not having a "G" designation are for information only. When used, a designation following the "G" designation identifies the office that will review the submittal for the Government. Submittals with an "S"

are for inclusion in the Sustainability Notebook, in conformance to Section 01 33 29 SUSTAINABILITY REPORTING. Submit the following in accordance with Section 01 33 00.

SD-02 Shop Drawings

Wireways; G

SD-03 Product Data

Receptacles; G

Circuit breakers; G

Switches; G

Enclosed circuit breakers; G

Motor controllers; G

Combination motor controllers; G

Manual motor starters; G

Include performance and characteristic curves.

SD-06 Test Reports

600-volt wiring test

Grounding system test

Ground-fault receptacle test

SD-07 Certificates

Fuses

1.4 QUALITY ASSURANCE

1.4.1 Fuses

Submit coordination data as specified in paragraph, FUSES of this section.

1.4.2 Regulatory Requirements

In each of the publications referred to herein, consider the advisory provisions to be mandatory, as though the word, "shall" or "must" had been substituted for "should" wherever it appears. Interpret references in these publications to the "authority having jurisdiction," or words of similar meaning, to mean the Contracting Officer. Provide equipment, materials, installation, and workmanship in accordance with the mandatory and advisory provisions of NFPA 70 unless more stringent requirements are specified or indicated.

1.4.3 Standard Products

Provide materials and equipment that are products of manufacturers regularly engaged in the production of such products which are of equal

material, design and workmanship and:

a. Have been in satisfactory commercial or industrial use for 2 years prior to bid opening including applications of equipment and materials under similar circumstances and of similar size.

b. Have been on sale on the commercial market through advertisements, manufacturers' catalogs, or brochures during the 2-year period.

c. Where two or more items of the same class of equipment are required, provide products of a single manufacturer; however, the component parts of the item need not be the products of the same manufacturer unless stated in this section.

d. Where installed in existing equipment, ovrercurrent protection devices shall be compatible with the equipment in which it is to be installed and shall match the existing short circuit rating of the highest rated device in the equipment.

1.4.3.1 Material and Equipment Manufacturing Date

Products manufactured more than 3 years prior to date of delivery to site are not acceptable.

1.5 MAINTENANCE

1.6 WARRANTY

Provide equipment items supported by service organizations that are reasonably convenient to the equipment installation in order to render satisfactory service to the equipment on a regular and emergency basis during the warranty period of the contract.

PART 2 PRODUCTS

2.1 MATERIALS AND EQUIPMENT

As a minimum, meet requirements of UL, where UL standards are established for those items, and requirements of NFPA 70 for all materials, equipment, and devices.

2.2 CONDUIT AND FITTINGS

Conform to the following:

2.2.1 Rigid Metallic Conduit

2.2.1.1 Rigid, Threaded Zinc-Coated Steel Conduit

ANSI C80.1, UL 6.

2.2.1.2 Rigid Aluminum Conduit

ANSI C80.5, UL 6A.

2.2.2 Rigid Nonmetallic Conduit

PVC Type EPC-40, and EPC-80 in accordance with NEMA TC 2,UL 651.

2.2.3 Intermediate Metal Conduit (IMC)

UL 1242, zinc-coated steel only.

2.2.4 Electrical, Zinc-Coated Steel Metallic Tubing (EMT)

UL 797, ANSI C80.3.

2.2.5 Plastic-Coated Rigid Steel and IMC Conduit

NEMA RN 1, Type 40(40 mils thick).

2.2.6 Flexible Metal Conduit

UL 1.

2.2.6.1 Liquid-Tight Flexible Metal Conduit, Steel

UL 360.

2.2.7 Fittings for Metal Conduit, EMT, and Flexible Metal Conduit

UL 514B. Ferrous fittings: Compression type, cadmium- or zinc-coated in accordance with UL 514B. Set screw fittings are not permitted.

2.2.7.1 Fittings for Rigid Metal Conduit and IMC

Threaded-type. Split couplings unacceptable.

2.2.7.2 Fittings for EMT

Steelcompression type.

2.2.8 Fittings for Rigid Nonmetallic Conduit

NEMA TC 3 for PVC, and UL 514B.

2.2.9 Liquid-Tight Flexible Nonmetallic Conduit

UL 1660.

2.3 OUTLET BOXES AND COVERS

UL 514A, cadmium- or zinc-coated, if ferrous metal. UL 514C, if nonmetallic.

2.4 CABINETS, JUNCTION BOXES, AND PULL BOXES

Volume greater than 100 cubic inches, UL 50, hot-dip, zinc-coated, if sheet steel.

2.5 WIRES AND CABLES

Provide wires and cables in accordance applicable requirements of NFPA 70 and UL for type of insulation, jacket, and conductor specified or indicated. Do not use wires and cables manufactured more than 12 months prior to date of delivery to site.

2.5.1 Conductors

Provide the following:

a. Conductor sizes and capacities shown are based on copper, unless indicated otherwise.

b. Conductors No. 8 AWG and larger diameter: stranded.

c. Conductors No. 10 AWG and smaller diameter: solid.

d. Conductors for remote control, alarm, and signal circuits, classes 1, 2, and 3: stranded unless specifically indicated otherwise.

e. All conductors: copper.

2.5.1.1 Minimum Conductor Sizes

Provide minimum conductor size in accordance with the following:

a. Branch circuits: No. 12 AWG.

b. Class 1 remote-control and signal circuits: No. 14 AWG.

c. Class 2 low-energy, remote-control and signal circuits: No. 16 AWG.

d. Class 3 low-energy, remote-control, alarm and signal circuits: No. 22 AWG.

2.5.2 Color Coding

Provide color coding for service, feeder, branch, control, and signaling circuit conductors.

2.5.2.1 Ground and Neutral Conductors

Provide color coding of ground and neutral conductors as follows:

a. Grounding conductors: Green.

b. Neutral conductors: White.

c. Exception, where neutrals of more than one system are installed in same raceway or box, other neutrals color coding: white with a different colored (not green) stripe for each.

2.5.2.2 Ungrounded Conductors

Provide color coding of ungrounded conductors in different voltage systems as follows:

a. 208/120 volt, three-phase

(1) Phase A - black

(2) Phase B - red

(3) Phase C - blue

b. 480/277 volt, three-phase

(1) Phase A - brown

(2) Phase B - orange

(3) Phase C - yellow

c. 120/240 volt, single phase: Black and red

2.5.3 Insulation

Unless specified or indicated otherwise or required by NFPA 70, provide power and lighting wires rated for 600-volts, Type THWN/THHN conforming to UL 83 or Type XHHW conforming to UL 44, except that grounding wire may be type TW conforming to UL 83; remote-control and signal circuits: Type TW or TF, conforming to UL 83. Where lighting fixtures require 90-degree Centigrade (C) conductors, provide only conductors with 90-degree C insulation or better.

2.5.4 Bonding Conductors

ASTM B1, solid bare copper wire for sizes No. 8 AWG and smaller diameter; ASTM B8, Class B, stranded bare copper wire for sizes No. 6 AWG and larger diameter.

2.6 SPLICES AND TERMINATION COMPONENTS

UL 486A-486B for wire connectors and UL 510 for insulating tapes. Connectors for No. 10 AWG and smaller diameter wires: insulated, pressure-type in accordance with UL 486A-486B or UL 486C (twist-on splicing connector). Provide solderless terminal lugs on stranded conductors.

2.7 DEVICE PLATES

Provide the following:

a. UL listed, one-piece device plates for outlets to suit the devices installed.

b. For metal outlet boxes, plates on unfinished walls: zinc-coated sheet steel or cast metal having round or beveled edges.

c. For nonmetallic boxes and fittings, other suitable plates may be provided.

d. Plates on finished walls: nylon or lexan, minimum 0.03 inch wall thickness and same color as receptacle or toggle switch with which they are mounted.

f. Screws: machine-type with countersunk heads in color to match finish of plate.

g. Sectional type device plates are not be permitted.

h. Plates installed in wet locations: gasketed and UL listed for "wet locations."

2.8 SWITCHES

2.8.1 Toggle Switches

NEMA WD 1, UL 20, single pole, double pole, three-way, and four-way, totally enclosed with bodies of thermoplastic or thermoset plastic and mounting strap with grounding screw. Include the following:

a. Handles: white thermoplastic.

b. Wiring terminals: screw-type, side-wired or of the solderless pressure type having suitable conductor-release arrangement.

c. Contacts: silver-cadmium and contact arm - one-piece copper alloy.

d. Switches: rated quiet-type ac only, 120/277 volts, with current rating and number of poles indicated.

2.8.2 Switch with Red Pilot Handle

NEMA WD 1. Provide the following:

a. Pilot lights that are integrally constructed as a part of the switch's handle.

b. Pilot light color: red and illuminate whenever the switch is closed or "on".

c. Pilot lighted switch: rated 20 amps and 120 volts or 277 volts as indicated.

d. The circuit's neutral conductor to each switch with a pilot light.

2.8.3 Breakers Used as Switches

For 120- and 277-Volt fluorescent fixtures, mark breakers "SWD" in accordance with UL 489.

2.8.4 Disconnect Switches

NEMA KS 1. Provide heavy duty-type switches where indicated, where switches are rated higher than 240 volts, and for double-throw switches. Utilize Class R fuseholders and fuses for fused switches, unless indicated otherwise. Provide horsepower rated for switches serving as the motor-disconnect means. In indoor locations provide switches in NEMA 12 enclosure and in outdoor locations provide switches in NEMA 3R enclosure, unless otherwise indicated, per NEMA ICS 6.

2.9 FUSES

NEMA FU 1. Provide complete set of fuses for each fusible switch and control center. Coordinate time-current characteristics curves of fuses serving motors or connected in series with circuit breakers or other circuit protective devices for proper operation. Submit coordination data for approval. Provide fuses with a voltage rating not less than circuit voltage.

2.9.1 Fuseholders

Provide in accordance with UL 4248-1.

2.9.2 Cartridge Fuses, Current Limiting Type (Class R)

UL 198M, Class RK-1 time-delay type. Provide only Class R associated fuseholders in accordance with UL 4248-12.

2.9.3 Cartridge Fuses, High-Interrupting Capacity, Current Limiting Type (Classes J, L, and CC)

UL 198M, Class J for zero to 600 amperes, Class L for 601 to 6,000 amperes, and Class CC for zero to 30 amperes.

2.9.4 Cartridge Fuses, Current Limiting Type (Class T)

UL 198M, Class T for zero to 1,200 amperes, 300 volts; and zero to 800 amperes, 600 volts.

2.10 RECEPTACLES

Provide the following:

a. UL 498, hard use (also designated heavy-duty), grounding-type.

b. Ratings and configurations: as indicated.

c. Bodies: white as per NEMA WD 1.

d. Face and body: thermoplastic supported on a metal mounting strap.

e. Dimensional requirements: per NEMA WD 6.

f. Screw-type, side-wired wiring terminals or of the solderless pressure type having suitable conductor-release arrangement.

g. Grounding pole connected to mounting strap.

h. The receptacle: containing triple-wipe power contacts and double or triple-wipe ground contacts.

2.10.1 Weatherproof Receptacles

Provide receptacles, UL listed for use in "wet locations". Include cast metal box with gasketed, hinged, lockable and weatherproof while-in-use, polycarbonate, UV resistant/stabilized cover plate.

2.10.2 Ground-Fault Circuit Interrupter Receptacles

UL 943, duplex type for mounting in standard outlet box. Provide device capable of detecting current leak of 6 milliamperes or greater and tripping per requirements of UL 943 for Class A ground-fault circuit interrupter devices. Provide screw-type, side-wired wiring terminals or pre-wired (pigtail) leads.

2.10.3 Special Purpose Receptacles

Provide in ratings indicated. Furnish one matching plug with each

receptacle.

2.10.4 Plugs

Provide heavy-duty, rubber-covered three-, four-, or five-wire cord of required size, install plugs thereon, and attach to equipment. Provide UL listed plugs with receptacles, complete with grounding blades. Where equipment is not available, turn over plugs and cord assemblies to the Government.

2.11 PANELBOARDS

2.11.1 Directories

Provide new directories for existing panels modified by this project. Type directories and mount in holder behind transparent protective covering.

2.11.2 Circuit Breakers

UL 489, thermal magnetic-type or solid state-type having a minimum short-circuit current rating equal to the short-circuit current rating of the panelboard in which the circuit breaker will be mounted. Breaker terminals: UL listed as suitable for type of conductor provided. Where indicated on the drawings, provide circuit breakers with shunt trip devices. Series rated circuit breakers and plug-in circuit breakers are unacceptable.

2.11.2.1 Multipole Breakers

Provide common trip-type with single operating handle. Design breaker such that overload in one pole automatically causes all poles to open. Maintain phase sequence throughout each panel so that any three adjacent breaker poles are connected to Phases A, B, and C, respectively.

2.11.2.2 Circuit Breaker With Ground-Fault Circuit Interrupter

UL 943 and NFPA 70. Provide with "push-to-test" button, visible indication of tripped condition, and ability to detect and trip on current imbalance of 6 milliamperes or greater per requirements of UL 943 for Class A ground-fault circuit interrupter.

2.11.2.3 Circuit Breakers for HVAC Equipment

Provide circuit breakers for HVAC equipment having motors (group or individual) marked for use with HACR type and UL listed as HACR type.

2.12 ENCLOSED CIRCUIT BREAKERS

UL 489. Individual molded case circuit breakers with voltage and continuous current ratings, number of poles, overload trip setting, and short circuit current interrupting rating as indicated. Provide NEMA 12 enclosure in indoor locations and NEMA 3R enclosure in outdoor locations. Provide solid neutral where neutral wire is installed.

2.13 MOTOR SHORT-CIRCUIT PROTECTOR (MSCP)

Motor short-circuit protectors, also called motor circuit protectors (MCPs): UL 508 and UL 489, and provided as shown. Provide MSCPs that

consist of an adjustable instantaneous trip circuit breaker used only in conjunction with a combination motor controller which provides coordinated motor branch-circuit overload and short-circuit protection. Rate MSCPs in accordance with the requirements of NFPA 70.

2.14 MOTORS

Provide motors in accordance with the following:

a. NEMA MG 1 FIRE PUMPS.

b. Hermetic-type sealed motor compressors: Also comply with UL 984.

c. Provide the size in terms of HP, or kVA, or full-load current, or a combination of these characteristics, and other characteristics, of each motor as indicated or specified.

d. Determine specific motor characteristics to ensure provision of correctly sized starters and overload heaters.

e. Rate motors for operation on 208-volt, 3-phase circuits with a terminal voltage rating of 200 volts, and those for operation on 480-volt, 3-phase circuits with a terminal voltage rating of 460 volts.

f. Use motors designed to operate at full capacity with voltage variation of plus or minus 10 percent of motor voltage rating.

g. Unless otherwise indicated, use continuous duty type motors if rated 1 HP and above.

h. Where fuse protection is specifically recommended by the equipment manufacturer, provide fused switches in lieu of non-fused switches indicated.

2.14.1 High Efficiency Single-Phase Motors

Single-phase fractional-horsepower alternating-current motors: high efficiency types corresponding to the applications listed in NEMA MG 11. In exception, for motor-driven equipment with a minimum seasonal or overall efficiency rating, such as a SEER rating, provide equipment with motor to meet the overall system rating indicated.

2.14.2 Premium Efficiency Polyphase Motors

Select polyphase motors based on high efficiency characteristics relative to typical characteristics and applications as listed in NEMA MG 10. In addition, continuous rated, polyphase squirrel-cage medium induction motors must meet the requirements for premium efficiency electric motors in accordance with NEMA MG 1, including the NEMA full load efficiency ratings. In exception, for motor-driven equipment with a minimum seasonal or overall efficiency rating, such as a SEER rating, provide equipment with motor to meet the overall system rating indicated.

2.14.3 Motor Sizes

Provide size for duty to be performed, not exceeding the full-load nameplate current rating when driven equipment is operated at specified capacity under most severe conditions likely to be encountered. When

motor size provided differs from size indicated or specified, make adjustments to wiring, disconnect devices, and branch circuit protection to accommodate equipment actually provided. Provide controllers for motors rated 1-hp and above with electronic phase-voltage monitors designed to protect motors from phase-loss, undervoltage, and overvoltage. Provide protection for motors from immediate restart by a time adjustable restart relay.

2.14.4 Wiring and Conduit

Provide internal wiring for components of packaged equipment as an integral part of the equipment. Provide power wiring and conduit for field-installed equipment, and motor control equipment forming part of motor control centers or switchgear assemblies, the conduit and wiring connecting such centers, assemblies, or other power sources to equipment as specified herein. Power wiring and conduit: conform to the requirements specified herein. Control wiring: provided under, and conform to, the requirements of the section specifying the associated equipment.

2.15 MOTOR CONTROLLERS

Provide motor controllers in accordance with the following:

a. UL 508, NEMA ICS 1, and NEMA ICS 2,.

b. Provide controllers with thermal overload protection in each phase, and one spare normally open auxiliary contact, and one spare normally closed auxiliary contact.

c. Provide controllers for motors rated 1-hp and above with electronic phase-voltage monitors designed to protect motors from phase-loss, undervoltage, and overvoltage.

d. Provide protection for motors from immediate restart by a time adjustable restart relay.

e. When used with pressure, float, or similar automatic-type or maintained-contact switch, provide a hand/off/automatic selector switch with the controller.

f. Connections to selector switch: wired such that only normal automatic regulatory control devices are bypassed when switch is in "hand" position.

g. Safety control devices, such as low and high pressure cutouts, high temperature cutouts, and motor overload protective devices: connected in motor control circuit in "hand" and "automatic" positions.

h. Control circuit connections to hand/off/automatic selector switch or to more than one automatic regulatory control device: made in accordance with indicated or manufacturer's approved wiring diagram.

i. Provide selector switch with the means for locking in any position.

j. Provide a disconnecting means, capable of being locked in the open position, for the motor that is located in sight from the motor location and the driven machinery location. As an alternative, provide a motor controller disconnect, capable of being locked in the

open position, to serve as the disconnecting means for the motor if it is in sight from the motor location and the driven machinery location.

l. Overload protective devices: provide adequate protection to motor windings; be thermal inverse-time-limit type; and include manual reset-type pushbutton on outside of motor controller case.

m. Cover of combination motor controller and manual switch or circuit breaker: interlocked with operating handle of switch or circuit breaker so that cover cannot be opened unless handle of switch or circuit breaker is in "off" position.

n. Minimum short circuit withstand rating of combination motor controller: 100,000 amps rms symmetrical amperes.

o. Provide controllers in hazardous locations with classifications as indicated.

2.15.1 Control Wiring

Provide control wiring in accordance with the following:

a. All control wire: stranded tinned copper switchboard wire with 600-volt flame-retardant insulation Type SIS meeting UL 44, or Type MTW meeting UL 1063, and passing the VW-1 flame tests included in those standards.

b. Hinge wire: Class K stranding.

c. Current transformer secondary leads: not smaller than No. 10 AWG.

d. Control wire minimum size: No. 14 AWG.

e. Power wiring for 480-volt circuits and below: the same type as control wiring with No. 12 AWG minimum size.

f. Provide wiring and terminal arrangement on the terminal blocks to permit the individual conductors of each external cable to be terminated on adjacent terminal points.

2.15.2 Control Circuit Terminal Blocks

Provide control circuit terminal blocks in accordance with the following:

a. NEMA ICS 4.

b. Control circuit terminal blocks for control wiring: molded or fabricated type with barriers, rated not less than 600 volts.

c. Provide terminals with removable binding, fillister or washer head screw type, or of the stud type with contact and locking nuts.

d. Terminals: not less than No. 10 in size with sufficient length and space for connecting at least two indented terminals for 10 AWG conductors to each terminal.

e. Terminal arrangement: subject to the approval of the Contracting Officer with not less than four (4) spare terminals or 10 percent, whichever is greater, provided on each block or group of blocks.

f. Modular, pull apart, terminal blocks are acceptable provided they are of the channel or rail-mounted type.

g. Submit data showing that any proposed alternate will accommodate the specified number of wires, are of adequate current-carrying capacity, and are constructed to assure positive contact between current-carrying parts.

2.15.2.1 Types of Terminal Blocks

a. Short-Circuiting Type: Short-circuiting type terminal blocks: furnished for all current transformer secondary leads with provision for shorting together all leads from each current transformer without first opening any circuit. Terminal blocks: comply with the requirements of paragraph CONTROL CIRCUIT TERMINAL BLOCKS above.

b. Load Type: Load terminal blocks rated not less than 600 volts and of adequate capacity: provided for the conductors for NEMA Size 3 and smaller motor controllers and for other power circuits, except those for feeder tap units. Provide terminals of either the stud type with contact nuts and locking nuts or of the removable screw type, having length and space for at least two indented terminals of the size required on the conductors to be terminated. For conductors rated more than 50 amperes, provide screws with hexagonal heads. Conducting parts between connected terminals must have adequate contact surface and cross-section to operate without overheating. Provide eEach connected terminal with the circuit designation or wire number placed on or near the terminal in permanent contrasting color.

2.15.3 Control Circuits

Control circuits: maximum voltage of 120 volts derived from control transformer in same enclosure. Transformers: conform to UL 506, as applicable. Transformers, other than transformers in bridge circuits: provide primaries wound for voltage available and secondaries wound for correct control circuit voltage. Size transformers so that 80 percent of rated capacity equals connected load. Provide disconnect switch on primary side. Provide fuses in each ungrounded primary feeder. Provide one fused secondary lead with the other lead grounded. For designated systems, as indicated, provide backup power supply, including transformers connected to emergency power source. Provide for automatic switchover and alarm upon failure of primary control circuit.

2.15.4 Enclosures for Motor Controllers

NEMA ICS 6.

2.15.5 Multiple-Speed Motor Controllers and Reversible Motor Controllers

Across-the-line-type, electrically and mechanically interlocked. Multiple-speed controllers: include compelling relays and multiple-button, station-type with pilot lights for each speed.

2.15.6 Pushbutton Stations

Provide with "start/stop" momentary contacts having one normally open and one normally closed set of contacts, and red lights to indicate when motor is running. Stations: heavy duty, oil-tight design.

2.15.7 Pilot and Indicating Lights

Provide LED cluster lamps.

2.16 MANUAL MOTOR STARTERS (MOTOR RATED SWITCHES)

Single, Double, or Three pole designed for flush mounting with overload protection and pilot lights.

2.16.1 Pilot Lights

Provide yoke-mounted, seven element LED cluster light module. Color: in accordance with NEMA ICS 2.

2.17 MOTOR CONTROL CENTERS

Provide overcurrent protective devices in existing motor control centers.

2.17.1 Molded Case Circuit Breakers

Ensure molded case circuit breakers conform to the applicable requirements of UL 489. Provide manually-operated circuit breakers of the quick-make, quick-break, common trip type. Furnish automatic-trip braakers unless otherwise specified or indicated on the drawings. Ensure all poles of each breaker operate simultaneously by means of a common handle. Indicate on the operating handles whether the breakers are in "On," "Off," or "Tripped" position and with provisions for padlocking in the "Off" position. Provide personnel safety line terminal shields for each breaker. Ensure the circuit breakers are products of only one manufacturer, and interchangeable when of the same frame size. Where indicated on the drawings, provide circuit breakers with shunt trip devices.

2.17.1.1 Trip Units

Except as otherwise noted, provide the circuit breakers, of frame sizes and the trip unit ratings as shown on the drawings, with combination thermal and instantaneous magnetic or solid state trip units. The Government reserves the right to change the indicated trip ratings, within frame limits, of the trip devices at the time the shop drawings are submitted for approval. Provide interchangeable breaker trip units and the instantaneous magnetic trip units are adjustable on frame sizes larger than 150 amperes. Set nonadjustable instantaneous magnetic trip units at approximately 10 times the continuous current ratings of the circuit breakers. Solid state trip units, where indicated, also have adjustable long time pick-up and delay,short time pick-up and delay, and ground fault pick-up and delay.

2.17.1.2 480-Volt AC Circuits

Rate circuit breakers for 480-volt or 277/480-volt ac circuits 600 volts ac, and have an UL listed minimum interrupting capacity of 14,000 symmetrical amperes at 600 volts ac.

2.18 LOCKOUT REQUIREMENTS

Provide disconnecting means capable of being locked out for machines and other equipment to prevent unexpected startup or release of stored energy

in accordance with 29 CFR 1910.147. Comply with requirements of Division 23, "Mechanical" for mechanical isolation of machines and other equipment.

2.19 GROUNDING AND BONDING EQUIPMENT

2.19.1 Ground Rods

UL 467. Ground rods: copper-clad steel, with minimum diameter of 3/4 inch and minimum length 10 feet. Sectional ground rods are permitted.

2.20 HAZARDOUS LOCATIONS

Electrical materials, equipment, and devices for installation in hazardous locations, as defined by NFPA 70: specifically approved by Underwriters' Laboratories, Inc., or Factory Mutual for particular "Class," "Division," and "Group" of hazardous locations involved. Boundaries and classifications of hazardous locations: as indicated. Equipment in hazardous locations: comply with UL 1203 for electrical equipment and industrial controls and UL 674 for motors.

2.21 MANUFACTURER'S NAMEPLATE

Provide on each item of equipment a nameplate bearing the manufacturer's name, address, model number, and serial number securely affixed in a conspicuous place; the nameplate of the distributing agent will not be acceptable.

2.22 FIELD FABRICATED NAMEPLATES

Provide field fabricated nameplates in accordance with the following:

a. ASTM D709.

b. Provide laminated plastic nameplates for each equipment enclosure, relay, switch, and device; as specified or as indicated on the drawings.

c. Each nameplate inscription: identify the function and, when applicable, the position.

d. Nameplates: melamine plastic, 0.125 inch thick, white with black center core.

e. Provide red laminated plastic label with white center core where indicated.

f. Surface: matte finish. Corners: square. Accurately align lettering and engrave into the core.

g. Minimum size of nameplates: one by 2.5 inches.

h. Lettering size and style: a minimum of 0.25 inch high normal block style.

2.23 WARNING SIGNS

Provide warning signs for flash protection in accordance with NFPA 70E and NEMA Z535.4 for switchboards, panelboards, industrial control panels, and motor control centers that are in other than dwelling occupancies and are

likely to require examination, adjustment, servicing, or maintenance while energized. Provide field installed signs to warn qualified persons of potential electric arc flash hazards when warning signs are not provided by the manufacturer. Provide marking that is clearly visible to qualified persons before examination, adjustment, servicing, or maintenance of the equipment.

2.24 FIRESTOPPING MATERIALS

Provide firestopping around electrical penetrations in accordance with Section 07 84 00, FIRESTOPPING .

2.25 WIREWAYS

UL 870. Material: steel epoxy painted 16 gauge for heights and depths up to 6 by 6 inches, and 14 gauge for heights and depths up to 12 by 12 inches. Provide in length required for the application with screw- cover NEMA 12 enclosure per NEMA ICS 6.

2.26 SURGE PROTECTIVE DEVICES

Provide parallel type surge protective devices (SPD) which comply with UL 1449 at the indicated panelboards. Provide surge protectors in a NEMA12 enclosure per NEMA ICS 6. Use Type 1 or Type 2 SPD and connect on the load side of a dedicated circuit breaker.

Provide the following modes of protection:

FOR SINGLE PHASE AND THREE PHASE WYE CONNECTED SYSTEMS-
Phase to phase (L-L)
Each phase to neutral (L-N)
Neutral to ground (N-G)
Phase to ground (L-G)

Provide SPDs. Maximum L-N, L-G, and N-G Voltage Protection Rating:

700V for 120V, single phase system
700V for 120/240V, single phase system
700V for 208Y/120V, three phase system
1,200V for 480Y/277V, three phase system

Maximum L-L Voltage Protection Rating:

1,200V for 120V, single phase system
1,200V for 120/240V, single phase system
1,200V for 208Y/120V, three phase system
2,000V for 480Y/277V, three phase system

The minimum MCOV (Maximum Continuous Operating Voltage) rating for L-N and L-G modes of operation: 120% of nominal voltage for 240 volts and below; 115% of nominal voltage above 240 volts to 480 volts.

2.27 FACTORY APPLIED FINISH

Provide factory-applied finish on electrical equipment in accordance with the following:

a. NEMA 250 corrosion-resistance test and the additional requirements as specified herein.

b. Interior and exterior steel surfaces of equipment enclosures: thoroughly cleaned followed by a rust-inhibitive phosphatizing or equivalent treatment prior to painting.

c. Exterior surfaces: free from holes, seams, dents, weld marks, loose scale or other imperfections.

d. Interior surfaces: receive not less than one coat of corrosion-resisting paint in accordance with the manufacturer's standard practice.

e. Exterior surfaces: primed, filled where necessary, and given not less than two coats baked enamel with semigloss finish.

f. Equipment located indoors: ANSI Light Gray, and equipment located outdoors: ANSI Light Gray.

g. Provide manufacturer's coatings for touch-up work and as specified in paragraph FIELD APPLIED PAINTING.

PART 3 EXECUTION

3.1 INSTALLATION

Electrical installations, including weatherproof and hazardous locations and ducts, plenums and other air-handling spaces: conform to requirements of NFPA 70 and IEEE C2 and to requirements specified herein.

3.1.1 Hazardous Locations

Perform work in hazardous locations, as defined by NFPA 70, in strict accordance with NFPA 70 for particular "Class," "Division," and "Group" of hazardous locations involved. Provide conduit and cable seals where required by NFPA 70. Provide conduit with tapered threads.

3.1.2 Wiring Methods

Provide insulated conductors installed in rigid steel conduit, IMC, rigid nonmetallic conduit, or EMT, except where specifically indicated or specified otherwise or required by NFPA 70 to be installed otherwise. Grounding conductor: separate from electrical system neutral conductor. Provide insulated green equipment grounding conductor for circuit(s) installed in conduit and raceways. Minimum conduit size: 1/2 inch in diameter for low voltage lighting and power circuits. Vertical distribution in multiple story buildings: made with metal conduit in fire-rated shafts, with metal conduit extending through shafts for minimum distance of 6 inches. Firestop conduit which penetrates fire-rated walls, fire-rated partitions, or fire-rated floors in accordance with Section 07 84 00, FIRESTOPPING.

3.1.2.1 Pull Wire

Install pull wires in empty conduits. Pull wire: plastic having minimum 200-pound force tensile strength. Leave minimum 36 inches of slack at each end of pull wire.

3.1.3 Conduit Installation

Unless indicated otherwise, conceal conduit under floor slabs and within finished walls, ceilings, and floors. Keep conduit minimum 6 inches away from parallel runs of flues and steam or hot water pipes. Install conduit parallel with or at right angles to ceilings, walls, and structural members where located above accessible ceilings and where conduit will be visible after completion of project.

3.1.3.1 Restrictions Applicable to Aluminum Conduit

a. Do not install underground or encase in concrete or masonry.

b. Do not use brass or bronze fittings.

c. Do not use when the enclosed conductors must be shielded from the effects of High-altitude Electromagnetic Pulse (HEMP).

3.1.3.2 Restrictions Applicable to EMT

a. Do not install underground.

b. Do not encase in concrete, mortar, grout, or other cementitious materials.

c. Do not use in areas subject to severe physical damage including but not limited to equipment rooms where moving or replacing equipment could physically damage the EMT.

d. Do not use in hazardous areas.

e. Do not use outdoors.

f. Do not use in fire pump rooms.

g. Do not use when the enclosed conductors must be shielded from the effects of High-altitude Electromagnetic Pulse (HEMP).

3.1.3.3 Restrictions Applicable to Nonmetallic Conduit

a. PVC Schedule 40 and PVC Schedule 80

(1) Do not use in areas where subject to severe physical damage, including but not limited to, mechanical equipment rooms, electrical equipment rooms, hospitals, power plants, missile magazines, and other such areas.

(2) Do not use in hazardous (classified) areas.

(3) Do not use in fire pump rooms.

(4) Do not use in penetrating fire-rated walls or partitions, or fire-rated floors.

(5) Do not use above grade, except where allowed in this section for rising through floor slab or indicated otherwise.

(6) Do not use when the enclosed conductors must be shielded from the effects of High-altitude Electromagnetic Pulse (HEMP).

3.1.3.4 Restrictions Applicable to Flexible Conduit

Use only as specified in paragraph FLEXIBLE CONNECTIONS. Do not use when the enclosed conductors must be shielded from the effects of High-altitude Electromagnetic Pulse (HEMP).

3.1.3.5 Underground Conduit

Plastic-coated rigid steel; plastic-coated steel IMC; PVC, Type EPC-40 Plastic coating: extend minimum 6 inches above floor.

3.1.3.6 Conduit for Circuits Rated Greater Than 600 Volts

Rigid metal conduit or IMC only.

3.1.3.7 Conduit Installed Under Floor Slabs

Conduit run under floor slab: located a minimum of 12 inches below the vapor barrier. Seal around conduits at penetrations thru vapor barrier.

3.1.3.8 Conduit Through Floor Slabs

Where conduits rise through floor slabs, do not allow curved portion of bends to be visible above finished slab.

3.1.3.9 Stub-Ups

Provide conduits stubbed up through concrete floor for connection to free-standing equipment with adjustable top or coupling threaded inside for plugs, set flush with finished floor. Extend conductors to equipment in rigid steel conduit, except that flexible metal conduit may be used 6 inches above floor. Where no equipment connections are made, install screwdriver-operated threaded flush plugs in conduit end.

3.1.3.10 Conduit Support

Support conduit by pipe straps, wall brackets, threaded rod conduit hangers, or ceiling trapeze. Fasten by wood screws to wood; by toggle bolts on hollow masonry units; by concrete inserts or expansion bolts on concrete or brick; and by machine screws, welded threaded studs, or spring-tension clamps on steel work. Threaded C-clamps may be used on rigid steel conduit only. Do not weld conduits or pipe straps to steel structures. Do not exceed one-fourth proof test load for load applied to fasteners. Provide vibration resistant and shock-resistant fasteners attached to concrete ceiling. Do not cut main reinforcing bars for any holes cut to depth of more than 1 1/2 inches in reinforced concrete beams or to depth of more than 3/4 inch in concrete joints. Fill unused holes. In partitions of light steel construction, use sheet metal screws. In suspended-ceiling construction, run conduit above ceiling. Do not support conduit by ceiling support system. Conduit and box systems: supported independently of both (a) tie wires supporting ceiling grid system, and (b) ceiling grid system into which ceiling panels are placed. Do not share supporting means between electrical raceways and mechanical piping or ducts. Coordinate installationwith above-ceiling mechanical systems to assure maximum accessibility to all systems. Spring-steel fasteners may be used for lighting branch circuit conduit supports in suspended ceilings in dry locations. Support exposed risers in wire shafts of multistory buildings by U-clamp hangers at each floor level and at 10 foot maximum

intervals. Where conduit crosses building expansion joints, provide suitable expansion fitting that maintains conduit electrical continuity by bonding jumpers or other means. For conduits greater than 2 1/2 inches inside diameter, provide supports to resist forces of 0.5 times the equipment weight in any direction and 1.5 times the equipment weight in the downward direction.

3.1.3.11 Directional Changes in Conduit Runs

Make changes in direction of runs with symmetrical bends or cast-metal fittings. Make field-made bends and offsets with hickey or conduit-bending machine. Do not install crushed or deformed conduits. Avoid trapped conduits. Prevent plaster, dirt, or trash from lodging in conduits, boxes, fittings, and equipment during construction. Free clogged conduits of obstructions.

3.1.3.12 Locknuts and Bushings

Fasten conduits to sheet metal boxes and cabinets with two locknuts where required by NFPA 70, where insulated bushings are used, and where bushings cannot be brought into firm contact with the box; otherwise, use at least minimum single locknut and bushing. Provide locknuts with sharp edges for digging into wall of metal enclosures. Install bushings on ends of conduits, and provide insulating type where required by NFPA 70.

3.1.3.13 Flexible Connections

Provide flexible steel conduit between 3 and 6 feet in length for recessed and semirecessed lighting fixtures; for equipment subject to vibration, noise transmission, or movement; and for motors. Install flexible conduit to allow 20 percent slack. Minimum flexible steel conduit size: 1/2 inch diameter. Provide liquidtight flexible conduit in wet and damp locations and in fire pump rooms for equipment subject to vibration, noise transmission, movement or motors. Provide separate ground conductor across flexible connections.

3.1.4 Boxes, Outlets, and Supports

Provide boxes in wiring and raceway systems wherever required for pulling of wires, making connections, and mounting of devices or fixtures. Boxes for metallic raceways: cast-metal, hub-type when located in wet locations, when surface mounted on outside of exterior surfaces, when surface mounted on interior walls exposed up to 7 feet above floors and walkways, or when installed in hazardous areas and when specifically indicated. Boxes in other locations: sheet steel, except that aluminum boxes may be used with aluminum conduit, and nonmetallic boxes may be used with nonmetallic conduit system. Provide each box with volume required by NFPA 70 for number of conductors enclosed in box. Boxes for mounting lighting fixtures: minimum 4 inches square, or octagonal, except that smaller boxes may be installed as required by fixture configurations, as approved. Boxes for use in masonry-block or tile walls: square-cornered, tile-type, or standard boxes having square-cornered, tile-type covers. Provide gaskets for cast-metal boxes installed in wet locations and boxes installed flush with outside of exterior surfaces. Provide separate boxes for flush or recessed fixtures when required by fixture terminal operating temperature; provide readily removable fixturesfor access to boxes unless ceiling access panels are provided. Support boxes and pendants for surface-mounted fixtures on suspended ceilings independently of ceiling supports. Fasten boxes and supports with wood screws on wood, with bolts

and expansion shields on concrete or brick, with toggle bolts on hollow masonry units, and with machine screws or welded studs on steel. Threaded studs driven in by powder charge and provided with lockwashers and nuts may be used in lieu of wood screws, expansion shields, or machine screws. In open overhead spaces, cast boxes threaded to raceways need not be separately supported except where used for fixture support; support sheet metal boxes directly from building structure or by bar hangers. Where bar hangers are used, attach bar to raceways on opposite sides of box, and support raceway with approved-type fastener maximum 24 inches from box. When penetrating reinforced concrete members, avoid cutting reinforcing steel.

3.1.4.1 Boxes

Boxes for use with raceway systems: minimum 1 1/2 inches deep, except where shallower boxes required by structural conditions are approved. Boxes for other than lighting fixture outlets: minimum 4 inches square, except that 4 by 2 inch boxes may be used where only one raceway enters outlet. Mount outlet boxes flush in finished walls.

3.1.4.2 Pull Boxes

Construct of at least minimum size required by NFPA 70 of code-gauge aluminum or galvanized sheet steel, except where cast-metal boxes are required in locations specified herein. Provide boxes with screw-fastened covers. Where several feeders pass through common pull box, tag feeders to indicate clearly electrical characteristics, circuit number, and panel designation.

3.1.4.3 Extension Rings

Extension rings are not permitted for new construction. Use only on existing boxes in concealed conduit systems where wall is furred out for new finish.

3.1.5 Mounting Heights

Mount panelboards, enclosed circuit breakers, motor controller and disconnecting switches so height of operating handle at its highest position is maximum 78 inches above floor. Mount lighting switches 48 inches above finished floor. Mount receptacles 18 inches above finished floor, unless otherwise indicated. Mount other devices as indicated. Measure mounting heights of wiring devices and outlets in non-hazardous areas to center of device or outlet. Measure mounting heights of receptacle outlet boxes in the hazardous area to the bottom of the outlet box.

3.1.6 Conductor Identification

Provide conductor identification within each enclosure where tap, splice, or termination is made. For conductors No. 6 AWG and smaller diameter, provide color coding by factory-applied, color-impregnated insulation. For conductors No. 4 AWG and larger diameter, provide color coding by plastic-coated, self-sticking markers; colored nylon cable ties and plates; or heat shrink-type sleeves. Identify control circuit terminations in accordance with Section 23 09 13 INSTRUMENTATION AND CONTROL DEVICES FOR HVAC.

3.1.6.1 Marking Strips

Provide marking strips in accordance with the following:

a. Provide white or other light-colored plastic marking strips, fastened by screws to each terminal block, for wire designations.

b. Use permanent ink for the wire numbers

c. Provide reversible marking strips to permit marking both sides, or provide two marking strips with each block.

d. Size marking strips to accommodate the two sets of wire numbers.

e. Assign a device designation in accordance with NEMA ICS 1 to each device to which a connection is made. Mark each device terminal to which a connection is made with a distinct terminal marking corresponding to the wire designation used on the Contractor's schematic and connection diagrams.

f. The wire (terminal point) designations used on the Contractor's wiring diagrams and printed on terminal block marking strips may be according to the Contractor's standard practice; however, provide additional wire and cable designations for identification of remote (external) circuits for the Government's wire designations.

g. Prints of the marking strips drawings submitted for approval will be so marked and returned to the Contractor for addition of the designations to the terminal strips and tracings, along with any rearrangement of points required.

3.1.7 Splices

Make splices in accessible locations. Make splices in conductors No. 10 AWG and smaller diameter with insulated, pressure-type connector. Make splices in conductors No. 8 AWG and larger diameter with solderless connector, and cover with insulation material equivalent to conductor insulation.

3.1.7.1 Splices of Aluminum Conductors

Make with solderless circumferential compression-type, aluminum-bodied connectors UL listed for AL/CU. Remove surface oxides from aluminum conductors by wire brushing and immediately apply oxide-inhibiting joint compound and insert in connector. After joint is made, wipe away excess joint compound, and insulate splice.

3.1.8 Covers and Device Plates

Install with edges in continuous contact with finished wall surfaces without use of mats or similar devices. Plaster fillings are not permitted. Install plates with alignment tolerance of 1/16 inch. Use of sectional-type device plates are not permitted. Provide gasket for plates installed in wet locations.

3.1.9 Electrical Penetrations

Seal openings around electrical penetrations through fire resistance-rated walls, partitions, floors, or ceilings in accordance with Section 07 84 00

FIRESTOPPING.

3.1.10 Grounding and Bonding

Provide in accordance with NFPA 70 and NFPA 780. Ground exposed, non-current-carrying metallic parts of electrical equipment, metallic raceway systems, grounding conductor in metallic and nonmetallic raceways, telecommunications system grounds, and neutral conductor of wiring systems. Where ground fault protection is employed, ensure that connection of ground and neutral does not interfere with correct operation of fault protection.

3.1.10.1 Grounding Connections

Make grounding connections which are buried or otherwise normally inaccessible, excepting specifically those connections for which access for periodic testing is required, by exothermic weld or compression connector.

a. Make exothermic welds strictly in accordance with the weld manufacturer's written recommendations. Welds which are "puffed up" or which show convex surfaces indicating improper cleaning are not acceptable. Mechanical connectors are not required at exothermic welds.

b. Make compression connections using a hydraulic compression tool to provide the correct circumferential pressure. Provide tools and dies as recommended by the manufacturer. Use an embossing die code or other standard method to provide visible indication that a connector has been adequately compressed on the ground wire.

3.1.10.2 Resistance

Maximum resistance-to-ground of grounding system: do not exceed 5 ohms under dry conditions. Where resistance obtained exceeds 5 ohms, contact Contracting Officer for further instructions.

3.1.11 Equipment Connections

Provide power wiring for the connection of motors and control equipment under this section of the specification. Except as otherwise specifically noted or specified, automatic control wiring, control devices, and protective devices within the control circuitry are not included in this section of the specifications and are provided under the section specifying the associated equipment.

3.1.12 Government-Furnished Equipment

Contractor make connections to Government-furnished equipment to make equipment operate as intended, including providing miscellaneous items such as plugs, receptacles, wire, cable, conduit, flexible conduit, and outlet boxes or fittings.

3.1.13 Repair of Existing Work

Perform repair of existing work, demolition, and modification of existing electrical distribution systems as follows:

3.1.13.1 Workmanship

Lay out work in advance. Exercise care where cutting, channeling, chasing, or drilling of floors, walls, partitions, ceilings, or other surfaces is necessary for proper installation, support, or anchorage of conduit, raceways, or other electrical work. Repair damage to buildings, piping, and equipment using skilled craftsmen of trades involved.

3.1.13.2 Existing Concealed Wiring to be Removed

Disconnect existing concealed wiring to be removed from its source. Remove conductors; cut conduit flush with floor, underside of floor, and through walls; and seal openings.

3.1.13.3 Removal of Existing Electrical Distribution System

Removal of existing electrical distribution system equipment includes equipment's associated wiring, including conductors, cables, exposed conduit, surface metal raceways, boxes, and fittings, back to equipment's power source as indicated.

3.1.13.4 Continuation of Service

Maintain continuity of existing circuits of equipment to remain. Maintain existing circuits of equipment energized. Restore circuits wiring and power which are to remain but were disturbed during demolition back to original condition.

3.2 FIELD FABRICATED NAMEPLATE MOUNTING

Provide number, location, and letter designation of nameplates as indicated. Fasten nameplates to the device with a minimum of two sheet-metal screws or two rivets.

Provide updated, type-written panel directories for each panel affected by the work.

3.3 WARNING SIGN MOUNTING

Provide the number of signs required to be readable from each accessible side. Space the signs in accordance with NFPA 70E.

3.4 FIELD APPLIED PAINTING

Paint electrical equipment as required to match finish of adjacent surfaces or to meet the indicated or specified safety criteria. Painting: as specified in Section 09 90 00 PAINTS AND COATINGS.

3.5 FIELD QUALITY CONTROL

Furnish test equipment and personnel and submit written copies of test results. Give Contracting Officer10 working days notice prior to each test.

3.5.1 Devices Subject to Manual Operation

Operate each device subject to manual operation at least five times, demonstrating satisfactory operation each time.

3.5.2 600-Volt Wiring Test

Test wiring rated 600 volt and less to verify that no short circuits or accidental grounds exist. Perform insulation resistance tests on wiring No. 6 AWG and larger diameter using instrument which applies voltage of approximately 500 volts to provide direct reading of resistance. Minimum resistance: 250,000 ohms.

3.5.3 Ground-Fault Receptacle Test

Test ground-fault receptacles with a "load" (such as a plug in light) to verify that the "line" and "load" leads are not reversed.

-- End of Section --

SECTION 26 24 13

SWITCHBOARDS
05/15

PART 1 GENERAL

1.1 REFERENCES

The publications listed below form a part of this specification to the extent referenced. The publications are referred to in the text by the basic designation only.

ASTM INTERNATIONAL (ASTM)

ASTM A780/A780M	(2009; R 2015) Standard Practice for Repair of Damaged and Uncoated Areas of Hot-Dip Galvanized Coatings
ASTM D709	(2013) Laminated Thermosetting Materials

INSTITUTE OF ELECTRICAL AND ELECTRONICS ENGINEERS (IEEE)

IEEE 100	(2000; Archived) The Authoritative Dictionary of IEEE Standards Terms
IEEE C2	(2012; Errata 1 2012; INT 1-4 2012; Errata 2 2013; INT 5-7 2013; INT 8-10 2014; INT 11 2015) National Electrical Safety Code
IEEE C37.13	(2015) Standard for Low-Voltage AC Power Circuit Breakers Used in Enclosures

INTERNATIONAL ELECTRICAL TESTING ASSOCIATION (NETA)

NETA ATS	(2013) Standard for Acceptance Testing Specifications for Electrical Power Equipment and Systems

NATIONAL ELECTRICAL MANUFACTURERS ASSOCIATION (NEMA)

ANSI/NEMA PB 2.1	(2013) General Instructions for Proper Handling, Installation, Operation and Maintenance of Deadfront Distribution Switchboards Rated 600 V or Less
NEMA PB 2	(2011) Deadfront Distribution Switchboards

NATIONAL FIRE PROTECTION ASSOCIATION (NFPA)

NFPA 70	(2014; AMD 1 2013; Errata 1 2013; AMD 2 2013; Errata 2 2013; AMD 3 2014; Errata 3-4 2014; AMD 4-6 2014) National Electrical Code

UNDERWRITERS LABORATORIES (UL)

UL 467	(2007) Grounding and Bonding Equipment

UL 489	(2013; Reprint Mar 2014) Molded-Case Circuit Breakers, Molded-Case Switches, and Circuit-Breaker Enclosures
UL 891	(2005; Reprint Oct 2012) Switchboards

1.2 DEFINITIONS

Unless otherwise specified or indicated, electrical and electronics terms used in these specifications, and on the drawings, are as defined in IEEE 100.

1.3 SUBMITTALS

Government approval is required for submittals with a "G" designation; submittals not having a "G" designation are for information only. When used, a designation following the "G" designation identifies the office that will review the submittal for the Government. Submit the following in accordance with Section 01 33 00 SUBMITTAL PROCEDURES:

SD-02 Shop Drawings

Switchboard Drawings; G

SD-03 Product Data

Protective Device; G

SD-06 Test Reports

Acceptance Checks and Tests

1.4 QUALITY ASSURANCE

1.4.1 Product Data

Include manufacturer's information on each submittal for each component, device and accessory provided with the switchboard including:

a. Circuit breaker type, interrupting rating, and trip devices, including available settings.

1.4.2 Switchboard Drawings

Include wiring diagrams and installation details of equipment indicating new and existing devices and any modifications necessary to accept new devices. Identify circuit terminals on wiring diagrams and indicate the internal wiring for each item of equipment and the interconnection between each item of equipment. Indicate on the drawings adequate clearance for operation, maintenance, and replacement of operating equipment devices. Include the nameplate data, size, and capacity on submittal. Also include applicable federal, military, industry, and technical society publication references on submittals. Include the following:

a. One-line diagram including breakers, fuses, current transformers, and meters.

b. Outline drawings including front elevation, section views, footprint,

and overall dimensions.

c. Bus configuration including dimensions and ampere ratings of bus bars.

d. Markings and NEMA nameplate data, including fuse information (manufacturer's name, catalog number, and ratings).

e. Circuit breaker type, interrupting rating, and trip devices, including available settings.

f. Wiring diagrams and elementary diagrams with terminals identified, and indicating prewired interconnections between items of equipment and the interconnection between the items.

1.4.3 Regulatory Requirements

In each of the publications referred to herein, consider the advisory provisions to be mandatory, as though the word, "shall" or "must" had been substituted for "should" wherever it appears. Interpret references in these publications to the "authority having jurisdiction," or words of similar meaning, to mean the Contracting Officer. Provide equipment, materials, installation, and workmanship in accordance with the mandatory and advisory provisions of NFPA 70 unless more stringent requirements are specified or indicated.

1.4.4 Standard Products

Provide materials and equipment that are products of manufacturers regularly engaged in the production of such products which are of equal material, design and workmanship, and:

a. Have been in satisfactory commercial or industrial use for 2 years prior to bid opening including applications of equipment and materials under similar circumstances and of similar size.

b. Have been on sale on the commercial market through advertisements, manufacturers' catalogs, or brochures during the 2-year period.

c. Where two or more items of the same class of equipment are required, provide products of a single manufacturer; however, the component parts of the item need not be the products of the same manufacturer unless stated in this section.

d. Where installed in existing equipment, ovrercurrent protection devices shall be compatible with the equipment in which it is to be installed and shall match the existing short circuit rating of the highest rated device in the equipment.

1.4.4.1 Material and Equipment Manufacturing Date

Products manufactured more than 1 year prior to date of delivery to site are not acceptable.

1.5 WARRANTY

Provide equipment items that are supported by service organizations reasonably convenient to the equipment installation in order to render satisfactory service to the equipment on a regular and emergency basis during the warranty period of the contract.

PART 2 PRODUCTS

2.1 PRODUCT COORDINATION

Products and materials not considered to be switchboards and related accessories are specified in Section 33 71 02 UNDERGROUND ELECTRICAL DISTRIBUTION, and Section 26 20 00 INTERIOR DISTRIBUTION SYSTEM.

2.2 SWITCHBOARD

NEMA PB 2 and UL 891.

2.2.1 Protective Device

2.2.1.1 Power Circuit Breaker

Provide the following:

a. IEEE C37.13. electrically operated stationary or drawout to match the existing devices, low-voltage power circuit breaker with a short-circuit current rating as indicated.

b. Breaker frame size: as indicated.

c. Equip electrically operated breakers with motor-charged, stored-energy closing mechanism to permit rapid and safe closing of the breaker against fault currents within the short time rating of the breaker, independent of the operator's strength or effort in closing the handle.

2.2.1.2 Insulated-Case Breaker

Provide the following:

a. UL 489. UL listed and labeled, 100 percent rated main breaker, manually operated, low voltage, insulated-case circuit breaker, with a short-circuit current rating as indicated.

b. Breaker frame size: as indicated.

c. Series rated circuit breakers are unacceptable.

2.2.1.3 Molded-Case Circuit Breaker

Provide the following:

a. UL 489. UL listed and labeled, standard rated branch breakers, manually operated, low voltage molded-case circuit breaker, with a short-circuit current rating of as indicated.

b. Breaker frame size: as indicated.

c. Series rated circuit breakers are unacceptable.

2.2.2 Electronic Trip Units

Equip main and distribution breakers as indicated with a solid-state tripping system consisting of three current sensors and a microprocessor-based trip unit that provides true rms sensing adjustable

time-current circuit protection. Include the following:

a. Current sensors ampere rating: as indicated.

b. Trip unit ampere rating: as indicated.

c. Ground fault protection: zero sequence sensing.

d. Electronic trip units: provide additional features as indicated:

(1) Breakers: include long delay pick-up and time settings, and LED indication of cause of circuit breaker trip.

(2) Main breakers: include short delay pick-up and time settings and, instantaneous settings and ground fault settings as indicated.

(3) Distribution breakers: include short delay pick-up and time settings, instantaneous settings, and ground fault settings as indicated.

(4) Breakers: include a digital display for phase and ground current.

(5) Breakers: include a digital display for watts, vars, VA, kWh, kvarh, and kVAh.

(6) Breakers: include a digital display for phase voltage, and percent THD voltage and current.

(7) Breakers: include provisions for communication via a network twisted pair cable for remote monitoring and control. Provide the following communications protocol:DNP3.

(8) For electronic trip units that are rated for or can be adjusted to 1,200 amperes or higher, provide arc energy reduction capability with an energy-reducing maintenance switch with local status indicator.

2.2.3 Wire Marking

Mark control and metering conductors at each end. Provide factory installed, white, plastic tubing, heat stamped with black block type letters on factory-installed wiring. On field-installed wiring, provide white, preprinted, polyvinyl chloride (PVC) sleeves, heat stamped with black block type letters. Provide a single letter or number on each sleeve, elliptically shaped to securely grip the wire, and keyed in such a manner to ensure alignment with adjacent sleeves. Provide specific wire markings using the appropriate combination of individual sleeves. Indicate on each wire marker the device or equipment, including specific terminal number to which the remote end of the wire is attached.

2.3 MANUFACTURER'S NAMEPLATE

Provide a nameplate on each item of equipment bearing the manufacturer's name, address, model number, and serial number securely affixed in a conspicuous place; the nameplate of the distributing agent is not acceptable. This nameplate and method of attachment may be the manufacturer's standard if it contains the required information.

2.4 FIELD FABRICATED NAMEPLATES

ASTM D709. Provide laminated plastic nameplates for each switchboard, equipment enclosure, relay, switch, and device; as specified in this section or as indicated on the drawings. Identify on each nameplate inscription the function and, when applicable, the position. Provide nameplates of melamine plastic, 0.125 inch thick, white with black center core. Provide red laminated plastic label with white center core where indicated. Provide matte finish surface. Provide square corners. Accurately align lettering and engrave into the core. Provide nameplates with minimum size of one by 2.5 inches. Provide lttering that is a minimum of 0.25 inch high normal block style.

PART 3 EXECUTION

3.1 INSTALLATION

Conform to IEEE C2, NFPA 70, and to the requirements specified herein. Provide new equipment and materials unless indicated or specified otherwise.

3.2 GROUNDING

NFPA 70 and IEEE C2, except that grounds and grounding systems with a resistance to solid earth ground not exceeding 25 ohms.

3.2.1 Grounding and Bonding Equipment

UL 467, except as indicated or specified otherwise.

3.3 INSTALLATION OF EQUIPMENT AND ASSEMBLIES

Install and connect equipment furnished under this section as indicated on project drawings, the approved shop drawings, and as specified herein.

3.3.1 Switchboard

ANSI/NEMA PB 2.1.

3.3.2 Field Applied Painting

Where field painting of enclosures is required to correct damage to the manufacturer's factory applied coatings, provide manufacturer's recommended coatings and apply in accordance with manufacturer's instructions.

3.3.3 Galvanizing Repair

Repair damage to galvanized coatings using ASTM A780/A780M, zinc rich paint, for galvanizing damaged by handling, transporting, cutting, welding, or bolting. Do not heat surfaces that repair paint has been applied to.

3.3.4 Field Fabricated Nameplate Mounting

Provide number, location, and letter designation of nameplates as indicated. Fasten nameplates to the device with a minimum of two sheet-metal screws or two rivets.

3.4 FIELD QUALITY CONTROL

3.4.1 Performance of Acceptance Checks and Tests

Perform in accordance with the manufacturer's recommendations and include the following visual and mechanical inspections and electrical tests, performed in accordance with NETA ATS.

3.4.1.1 Circuit Breakers - Low Voltage - Power

a. Visual and Mechanical Inspection

(1) Compare nameplate data with specifications and approved shop drawings.

(2) Inspect physical and mechanical condition.

(3) Inspect anchorage, alignment, and grounding.

(4) Verify that all maintenance devices are available for servicing and operating the breaker.

(5) Inspect arc chutes.

(6) Inspect moving and stationary contacts for condition, wear, and alignment.

(7) Verify that primary and secondary contact wipe and other dimensions vital to satisfactory operation of the breaker are correct.

(8) Perform all mechanical operator and contact alignment tests on both the breaker and its operating mechanism.

(9) Inspect all bolted electrical connections for high resistance using low-resistance ohmmeter, verifying tightness of accessible bolted electrical connections by calibrated torque-wrench method, or performing thermographic survey.

(10) Verify cell fit and element alignment.

(11) Verify racking mechanism.

(12) Confirm correct application of manufacturer's recommended lubricants.

b. Electrical Tests

(1) Perform contact-resistance tests on each breaker.

(2) Perform insulation-resistance tests.

(3) Adjust Breaker(s) for final settings in accordance with Government provided settings.

(4) Determine long-time minimum pickup current by primary current injection.

(5) Determine long-time delay by primary current injection.

(6) Determine short-time pickup and delay by primary current injection.

(7) Determine ground-fault pickup and delay by primary current injection.

(8) Determine instantaneous pickup value by primary current injection.

(9) Activate auxiliary protective devices, such as ground-fault or undervoltage relays, to ensure operation of shunt trip devices; Check the operation of electrically-operated breakers in their cubicle.

(10) Verify correct operation of any auxiliary features such as trip and pickup indicators, zone interlocking, electrical close and trip operation, trip-free, and antipump function.

(11) Verify operation of charging mechanism.

3.4.1.2 Circuit Breakers

Low Voltage - Insulated-Case and Low Voltage Molded Case with Solid State Trips

a. Visual and Mechanical Inspection

(1) Compare nameplate data with specifications and approved shop drawings.

(2) Inspect circuit breaker for correct mounting.

(3) Operate circuit breaker to ensure smooth operation.

(4) Inspect case for cracks or other defects.

(5) Inspect all bolted electrical connections for high resistance using low resistance ohmmeter, verifying tightness of accessible bolted connections and/or cable connections by calibrated torque-wrench method, or performing thermographic survey.

(6) Inspect mechanism contacts and arc chutes in unsealed units.

b. Electrical Tests

(1) Perform contact-resistance tests.

(2) Perform insulation-resistance tests.

(3) Perform Breaker adjustments for final settings in accordance with Government provided settings.

(4) Perform long-time delay time-current characteristic tests

(5) Determine short-time pickup and delay by primary current injection.

(6) Determine ground-fault pickup and time delay by primary current injection.

(7) Determine instantaneous pickup current by primary injection.

(8) Verify correct operation of any auxiliary features such as trip and pickup indicators, zone interlocking, electrical close and trip operation, trip-free, and anti-pump function.

3.4.2 Follow-Up Verification

Upon completion of acceptance checks, settings, and tests, show by demonstration in service that circuits and devices are in good operating condition and properly performing the intended function. Trip circuit breakers by operation of each protective device. Test each item to perform its function not less than three times. As an exception to requirements stated elsewhere in the contract, provide the Contracting Officer 5 working days advance notice of the dates and times for checks, settings, and tests.

-- End of Section --

THIS PAGE HAS BEEN INTENTIONALLY LEFT BLANK

SECTION 26 29 23

VARIABLE FREQUENCY DRIVE SYSTEMS UNDER 600 VOLTS
04/06

PART 1 GENERAL

1.1 REFERENCES

The publications listed below form a part of this specification to the extent referenced. The publications are referred to within the text by the basic designation only.

INSTITUTE OF ELECTRICAL AND ELECTRONICS ENGINEERS (IEEE)

IEEE 519	(2014) Recommended Practices and Requirements for Harmonic Control in Electrical Power Systems
IEEE C62.41.1	(2002; R 2008) Guide on the Surges Environment in Low-Voltage (1000 V and Less) AC Power Circuits
IEEE C62.41.2	(2002) Recommended Practice on Characterization of Surges in Low-Voltage (1000 V and Less) AC Power Circuits

NATIONAL ELECTRICAL MANUFACTURERS ASSOCIATION (NEMA)

NEMA 250	(2014) Enclosures for Electrical Equipment (1000 Volts Maximum)
NEMA ICS 1	(2000; R 2015) Standard for Industrial Control and Systems: General Requirements
NEMA ICS 3.1	(2009; R 2014) Guide for the Application, Handling, Storage, Installation and Maintenance of Medium-Voltage AC Contactors, Controllers and Control Centers
NEMA ICS 6	(1993; R 2011) Enclosures
NEMA ICS 7	(2014) Adjustable-Speed Drives

NATIONAL FIRE PROTECTION ASSOCIATION (NFPA)

NFPA 70	(2014; AMD 1 2013; Errata 1 2013; AMD 2 2013; Errata 2 2013; AMD 3 2014; Errata 3-4 2014; AMD 4-6 2014) National Electrical Code

U.S. DEPARTMENT OF DEFENSE (DOD)

MIL-STD-461	(2015; Rev G) Requirements for the Control of Electromagnetic Interference Characteristics of Subsystems and Equipment

U.S. NATIONAL ARCHIVES AND RECORDS ADMINISTRATION (NARA)

47 CFR 15	Radio Frequency Devices

UNDERWRITERS LABORATORIES (UL)

UL 489	(2013; Reprint Mar 2014) Molded-Case Circuit Breakers, Molded-Case Switches, and Circuit-Breaker Enclosures
UL 508C	(2002; Reprint Nov 2010) Power Conversion Equipment

1.2 RELATED REQUIREMENTS

Section 26 00 00.00 20 BASIC ELECTRICAL MATERIALS AND METHODS, and Section 26 20 00 INTERIOR DISTRIBUTION SYSTEM apply to this section with additions and modifications specified herein.

1.3 SYSTEM DESCRIPTION

1.3.1 Performance Requirements

1.3.1.1 Electromagnetic Interference Suppression

Computing devices, as defined by 47 CFR 15, MIL-STD-461 rules and regulations, shall be certified to comply with the requirements for class A computing devices and labeled as set forth in part 15.

1.3.1.2 Electromechanical and Electrical Components

Electrical and electromechanical components of the Variable Frequency Drive (VFD) shall not cause electromagnetic interference to adjacent electrical or electromechanical equipment while in operation.

1.3.2 Electrical Requirements

1.3.2.1 Power Line Surge Protection

IEEE C62.41.1 and IEEE C62.41.2, IEEE 519 Control panel shall have surge protection, included within the panel to protect the unit from damaging transient voltage surges. Surge arrestor shall be mounted near the incoming power source and properly wired to all three phases and ground. Fuses shall not be used for surge protection.

1.3.2.2 Sensor and Control Wiring Surge Protection

I/O functions as specified shall be protected against surges induced on control and sensor wiring installed outdoors and as shown. The inputs and outputs shall be tested in both normal mode and common mode using the following two waveforms:

a. A 10 microsecond by 1000 microsecond waveform with a peak voltage of 1500 volts and a peak current of 60 amperes.

b. An 8 microsecond by 20 microsecond waveform with a peak voltage of 1000 volts and a peak current of 500 amperes.

1.4 SUBMITTALS

Government approval is required for submittals with a "G" designation; submittals not having a "G" designation are for information only. When used, a designation following the "G" designation identifies the office that will review the submittal for the Government. Submit the following in accordance with Section 01 33 00 SUBMITTAL PROCEDURES:

SD-02 Shop Drawings

Schematic diagrams; G

Interconnecting diagrams; G

Installation drawings; G

Submit drawings for government approval prior to equipment construction or integration. Modifications to original drawings made during installation shall be immediately recorded for inclusion into the as-built drawings.

SD-03 Product Data

Variable frequency drives; G

Wires and cables

Equipment schedule

Include data indicating compatibility with motors being driven.

SD-06 Test Reports

VFD Test

Performance Verification Tests

Endurance Test

SD-08 Manufacturer's Instructions

Installation instructions

SD-09 Manufacturer's Field Reports

VFD Factory Test Plan; G

Factory test results

SD-10 Operation and Maintenance Data

Variable frequency drives, Data Package 4

Submit in accordance with Section 01 78 23 OPERATION AND MAINTENANCE DATA. Provide service and maintenance information including preventive maintenance, assembly, and disassembly procedures. Include electrical drawings from electrical general sections. Submit additional information necessary to provide complete operation, repair, and maintenance information, detailed

to the smallest replaceable unit. Include copies of as-built submittals. Provide routine preventative maintenance instructions, and equipment required. Provide instructions on how to modify program settings, and modify the control program. Provide instructions on drive adjustment, trouble-shooting, and configuration. Provide instructions on process tuning and system calibration.

1.5 QUALITY ASSURANCE

1.5.1 Schematic Diagrams

Show circuits and device elements for each replaceable module. Schematic diagrams of printed circuit boards are permitted to group functional assemblies as devices, provided that sufficient information is provided for government maintenance personnel to verify proper operation of the functional assemblies.

1.5.2 Interconnecting Diagrams

Show interconnections between equipment assemblies, and external interfaces, including power and signal conductors. Include for enclosures and external devices.

1.5.3 Installation Drawings

Show floor plan of each site, with V.F.D.'s and motors indicated. Indicate ventilation requirements, adequate clearances, and cable routes.

1.5.4 Equipment Schedule

Provide schedule of equipment supplied. Schedule shall provide a cross reference between manufacturer data and identifiers indicated in shop drawings. Schedule shall include the total quantity of each item of equipment supplied. For complete assemblies, such as VFD's, provide the serial numbers of each assembly, and a sub-schedule of components within the assembly. Provide recommended spare parts listing for each assembly or component.

1.5.5 Installation instructions

Provide installation instructions issued by the manufacturer of the equipment, including notes and recommendations, prior to shipment to the site. Provide operation instructions prior to acceptance testing.

1.5.6 Factory Test Results

Document test results and submit to government within 7 working days after completion of test.

1.6 DELIVERY AND STORAGE

Equipment delivered and placed in storage shall be stored with protection from the weather, humidity and temperature variations, dirt and dust, or other contaminants.

1.7 WARRANTY

The complete system shall be warranted by the manufacturer for a period of

one year, or the contracted period of any extended warrantee agreed upon by the contractor and the Government, after successful completion of the acceptance test. Any component failing to perform its function as specified and documented shall be repaired or replaced by the contractor at no additional cost to the Government. Items repaired or replaced shall be warranted for an additional period of at least one year from the date that it becomes functional again, as specified in the FAR CLAUSE 52.246-21.

1.8 MAINTENANCE

1.8.1 Spare Parts

Manufacturers provide spare parts in accordance with recommended spare parts list.

1.8.2 Maintenance Support

During the warranty period, the Contractor shall provide on-site, on-call maintenance services by Contractor's personnel on the following basis: The service shall be on a per-call basis with 36 hour response. Contractor shall support the maintenance of all hardware and software of the system. Various personnel of different expertise shall be sent on-site depending on the nature of the maintenance service required. Costs shall include travel, local transportation, living expenses, and labor rates of the service personnel while responding to the service request. The provisions of this Section are not in lieu of, nor relieve the Contractor of, warranty responsibilities covered in this specification. Should the result of the service request be the uncovering of a system defect covered under the warranty provisions, all costs for the call, including the labor necessary to identify the defect, shall be borne by the Contractor.

PART 2 PRODUCTS

2.1 VARIABLE FREQUENCY DRIVES (VFD)

Provide frequency drive to control the speed of induction motor(s). The VFD shall include the following minimum functions, features and ratings.

a. Input circuit breaker per UL 489 with a minimum of 10,000 amps symmetrical interrupting capacity and door interlocked external operator.

b. A converter stage per UL 508C shall change fixed voltage, fixed frequency, ac line power to a fixed dc voltage. The converter shall utilize a full wave bridge design incorporating diode rectifiers. Silicon Controlled Rectifiers (SCR) are not acceptable. The converter shall be insensitive to three phase rotation of the ac line and shall not cause displacement power factor of less than .95 lagging under any speed and load condition.

c. An inverter stage shall change fixed dc voltage to variable frequency, variable voltage, ac for application to a standard NEMA design B squirrel cage motor. The inverter shall be switched in a manner to produce a sine coded pulse width modulated (PWM) output waveform.

d. The VFD shall be capable of supplying 120 percent of rated full load current for one minute at maximum ambient temperature.

e. The VFD shall be designed to operate from a 480 volt, plus or minus 10 percent, three phase, 60 Hz supply, and control motors with a corresponding voltage rating.

f. Acceleration and deceleration time shall be independently adjustable from one second to 60 seconds.

g. Adjustable full-time current limiting shall limit the current to a preset value which shall not exceed 120 percent of the controller rated current. The current limiting action shall maintain the V/Hz ratio constant so that variable torque can be maintained. Short time starting override shall allow starting current to reach 175 percent of controller rated current to maximum starting torque.

h. The controllers shall be capable of producing an output frequency over the range of 3 Hz to 60 Hz (20 to one speed range), without low speed cogging. Over frequency protection shall be included such that a failure in the controller electronic circuitry shall not cause frequency to exceed 110 percent of the maximum controller output frequency selected.

i. Minimum and maximum output frequency shall be adjustable over the following ranges: 1) Minimum frequency 3 Hz to 50 percent of maximum selected frequency; 2) Maximum frequency 40 Hz to 60 Hz.

j. The controller efficiency at any speed shall not be less than 96 percent.

k. The controllers shall be capable of being restarted into a motor coasting in the forward direction without tripping.

l. Protection of power semiconductor components shall be accomplished without the use of fast acting semiconductor output fuses. Subjecting the controllers to any of the following conditions shall not result in component failure or the need for fuse replacement:

1. Short circuit at controller output

2. Ground fault at controller output

3. Open circuit at controller output

4. Input undervoltage

5. Input overvoltage

6. Loss of input phase

7. AC line switching transients

8. Instantaneous overload

9. Sustained overload exceeding 115 percent of controller rated current

10. Over temperature

11. Phase reversal

m. Solid state motor overload protection shall be included such that current exceeding an adjustable threshold shall activate a 60 second timing circuit. Should current remain above the threshold continuously for the timing period, the controller will automatically shut down.

n. A slip compensation circuit shall be included which will sense changing motor load conditions and adjust output frequency to provide speed regulation of NEMA B motors to within plus or minus 0.5 percent of maximum speed without the necessity of a tachometer generator.

o. The VFD shall be factory set for manual restart after the first protective circuit trip for malfunction (overcurrent,undervoltage, overvoltage or overtemperature) or an interruption of power. The VFD shall be capable of being set for automatic restart after a selected time delay. If the drive faults again within a specified time period (adjustable 0-60 seconds), a manual restart will be required.

p. The VFD shall include external fault reset capability. All the necessary logic to accept an external fault reset contact shall be included.

q. Provide critical speed lockout circuitry to prevent operating at frequencies with critical harmonics that cause resonant vibrations. The VFD shall have a minimum of three user selectable bandwidths.

r. Provide the following operator control and monitoring devices mounted on the front panel of the VFD:

   1. Manual speed potentiometer.

   2. Hand-Off-Auto (HOA) switch.

   3. Power on light.

   4. Drive run power light.

   5. Local display.

s. Provide properly sized NEMA rated by-pass and isolation contactors to enable operation of motor in the event of VFD failure. Mechanical and electrical interlocks shall be installed between the by-pass and isolation contactors. Provide a selector switch and transfer delay timer.

2.2 ENCLOSURES

Provide equipment enclosures conforming to NEMA 250, NEMA ICS 7, NEMA ICS 6.

2.3 WIRES AND CABLES

All wires and cables shall conform to NEMA 250, NEMA ICS 7, NFPA 70.

2.4 NAMEPLATES

Nameplates external to NEMA enclosures shall conform with the requirements of Section 26 00 00.00 20 BASIC ELECTRICAL MATERIALS AND METHODS. Nameplates internal to enclosures shall be manufacturer's standard, with the exception that they must be permanent.

2.5 SOURCE QUALITY CONTROL

2.5.1 VFD Factory Test Plan

To ensure quality, each VFD shall be subject to a series of in-plant quality control inspections before approval for shipment from the manufacturer's facilities. Provide test plans and test reports.

PART 3 EXECUTION

3.1 INSTALLATION

Per NEMA ICS 3.1, install equipment in accordance with the approved manufacturer's printed installation drawings, instructions, wiring diagrams, and as indicated on project drawings and the approved shop drawings. A field representative of the drive manufacturer shall supervise the installation of all equipment, and wiring.

3.2 FIELD QUALITY CONTROL

Specified products shall be tested as a system for conformance to specification requirements prior to scheduling the acceptance tests. Contractor shall conduct performance verification tests in the presence of Government representative, observing and documenting complete compliance of the system to the specifications. Contractor shall submit a signed copy of the test results, certifying proper system operation before scheduling tests.

3.2.1 VFD Test

A proposed test plan shall be submitted to the contracting officer at least 28 calendar days prior to proposed testing for approval. The tests shall conform to NEMA ICS 1, NEMA ICS 7, and all manufacturer's safety regulations. The Government reserves the right to witness all tests and review any documentation. The contractor shall inform the Government at least 14 working days prior to the dates of testing. Contractor shall provide video tapes, if available, of all training provided to the Government for subsequent use in training new personnel. All training aids, texts, and expendable support material for a self-sufficient presentation shall be provided, the amount of which to be determined by the contracting officer.

3.2.2 Performance Verification Tests

"Performance Verification Test" plan shall provide the step by step procedure required to establish formal verification of the performance of the VFD. Compliance with the specification requirements shall be verified by inspections, review of critical data, demonstrations, and tests. The Government reserves the right to witness all tests, review data, and request other such additional inspections and repeat tests as necessary to ensure that the system and provided services conform to the stated requirements. The contractor shall inform the Government 14 calendar days prior to the date the test is to be conducted.

3.2.3 Endurance Test

Immediately upon completion of the performance verification test, the endurance test shall commence. The system shall be operated at varying

rates for not less than 192 consecutive hours, at an average effectiveness level of .9998, to demonstrate proper functioning of the complete PCS. Continue the test on a day-to-day basis until performance standard is met. During the endurance test, the contractor shall not be allowed in the building. The system shall respond as designed.

3.3 DEMONSTRATION

3.3.1 Training

Coordinate training requirements with the Contracting Officer.

3.3.1.1 Instructions to Government Personnel

Provide the services of competent instructors who will give full instruction to designated personnel in operation, maintenance, calibration, configuration, and programming of the complete control system. Orient the training specifically to the system installed. Instructors shall be thoroughly familiar with the subject matter they are to teach. The Government personnel designated to attend the training will have a high school education or equivalent. The number of training days of instruction furnished shall be as specified. A training day is defined as eight hours of instruction, including two 15-minute breaks and excluding lunch time; Monday through Friday. Provide a training manual for each student at each training phase which describes in detail the material included in each training program. Provide one additional copy for archiving. Provide equipment and materials required for classroom training. Provide a list of additional related courses, and offers, noting any courses recommended. List each training course individually by name, including duration, approximate cost per person, and location of course. Unused copies of training manuals shall be turned over to the Government at the end of last training session.

3.3.1.2 Operating Personnel Training Program

Provide one 2 hour training session at the site at a time and place mutually agreeable between the Contractor and the Government. Provide session to train 4 operation personnel in the functional operations of the system and the procedures that personnel will follow in system operation. This training shall include:

a. System overview

b. General theory of operation

c. System operation

d. Alarm formats

e. Failure recovery procedures

f. Troubleshooting

3.3.1.3 Engineering/Maintenance Personnel Training

Accomplish the training program as specified. Training shall be conducted on site at a location designated by the Government. Provide a one day training session to train 4 engineering personnel in the functional operations of the system. This training shall include:

a. System overview

b. General theory of operation

c. System operation

d. System configuration

e. Alarm formats

f. Failure recovery procedures

g. Troubleshooting and repair

h. Maintenance and calibration

i. System programming and configuration

-- End of Section --

SECTION 26 56 00

EXTERIOR LIGHTING
05/13

PART 1 GENERAL

1.1 REFERENCES

The publications listed below form a part of this specification to the extent referenced. The publications are referred to in the text by the basic designation only.

AMERICAN ASSOCIATION OF STATE HIGHWAY AND TRANSPORTATION OFFICIALS (AASHTO)

AASHTO LTS	(2013; Errata 2013) Standard Specifications for Structural Supports for Highway Signs, Luminaires and Traffic Signals

AMERICAN SOCIETY OF HEATING, REFRIGERATING AND AIR-CONDITIONING ENGINEERS (ASHRAE)

ASHRAE 90.1 - IP	(2010) Energy Standard for Buildings Except Low-Rise Residential Buildings

ASTM INTERNATIONAL (ASTM)

ASTM A153/A153M	(2009) Standard Specification for Zinc Coating (Hot-Dip) on Iron and Steel Hardware
ASTM B108/B108M	(2015) Standard Specification for Aluminum-Alloy Permanent Mold Castings
ASTM B117	(2011) Standard Practice for Operating Salt Spray (Fog) Apparatus

ILLUMINATING ENGINEERING SOCIETY (IES)

IES HB-10	(2011; Errata 2015) IES Lighting Handbook
IES LM-79	(2008) Electrical and Photometric Measurements of Solid-State Lighting Products
IES LM-80	(2015) Measuring Lumen Maintenance of LED Light Sources
IES RP-16	(2010; Addendum A 2008; Addenda B & C 2009) Nomenclature and Definitions for Illuminating Engineering
IES RP-8	(2014) Roadway Lighting
IES TM-15	(2011) Luminaire Classification System for Outdoor Luminaires

IES TM-21	(2011) Projecting Long Term Lumen Maintenance of LED Light Sources

INSTITUTE OF ELECTRICAL AND ELECTRONICS ENGINEERS (IEEE)

IEEE 100	(2000; Archived) The Authoritative Dictionary of IEEE Standards Terms
IEEE C2	(2012; Errata 1 2012; INT 1-4 2012; Errata 2 2013; INT 5-7 2013; INT 8-10 2014; INT 11 2015) National Electrical Safety Code
IEEE C62.41.2	(2002) Recommended Practice on Characterization of Surges in Low-Voltage (1000 V and Less) AC Power Circuits

NATIONAL ELECTRICAL MANUFACTURERS ASSOCIATION (NEMA)

ANSI C136.13	(2004; R 2009) American National Standard for Roadway Lighting Equipment, Metal Brackets for Wood Poles
ANSI C136.21	(2014) American National Standard for Roadway and Area Lighting Equipment - Vertical Tenons Used with Post-Top-Mounted Luminaires
ANSI C136.3	(2014) American National Standard for Roadway and Area Lighting Equipment Luminaire Attachments
NEMA 250	(2014) Enclosures for Electrical Equipment (1000 Volts Maximum)
NEMA ANSLG C78.377	(2015) American National Standard for Electric Lamps— Specifications for the Chromaticity of Solid State Lighting Products
NEMA C136.31	(2010) American National for Roadway and Area Lighting Equipment - Luminaire Vibration
NEMA C82.77	(2002) Harmonic Emission Limits - Related Power Quality Requirements for Lighting Equipment
NEMA IEC 60529	(2004) Degrees of Protection Provided by Enclosures (IP Code)
NEMA WD 7	(2011) Occupancy Motion Sensors Standard

NATIONAL FIRE PROTECTION ASSOCIATION (NFPA)

NFPA 70	(2014; AMD 1 2013; Errata 1 2013; AMD 2 2013; Errata 2 2013; AMD 3 2014; Errata 3-4 2014; AMD 4-6 2014) National Electrical Code

U.S. NATIONAL ARCHIVES AND RECORDS ADMINISTRATION (NARA)

47 CFR 15	Radio Frequency Devices

UNDERWRITERS LABORATORIES (UL)

UL 1310	(2011; Reprint Dec 2014) UL Standard for Safety Class 2 Power Units
UL 1598	(2008; Reprint Oct 2012) Luminaires
UL 773	(1995; Reprint Jul 2015) Standard for Plug-In, Locking Type Photocontrols for Use with Area Lighting
UL 773A	(2006; Reprint Nov 2013) Standard for Nonindustrial Photoelectric Switches for Lighting Control
UL 8750	(2009; Reprint May 2014) UL Standard for Safety Light Emitting Diode (LED) Equipment for Use in Lighting Products

1.2 DEFINITIONS

a. Unless otherwise specified or indicated, electrical and electronics terms used in these specifications, and on the drawings shall be as defined in IEEE 100 and IES RP-16.

c. For LED luminaire light sources, "Useful Life" is the operating hours before reaching 70 percent of the initial rated lumen output (L70) with no catastrophic failures under normal operating conditions. This is also known as 70 percent "Rated Lumen Maintenance Life" as defined in IES LM-80.

1.3 SUBMITTALS

Government approval is required for submittals with a "G" designation; submittals not having a "G" designation are for information only. Submit the following in accordance with Section 01 33 00 SUBMITTAL PROCEDURES:

SD-01 Preconstruction Submittals

Photometric Plan; G

LED Luminaire Warranty; G

SD-02 Shop Drawings

Luminaire drawings; G

Poles; G

SD-03 Product Data

LED Luminaires; G

Luminaire Light Sources; G

Luminaire Power Supply Units (Drivers); G

Motion Sensor; G

Photocell; G

Aluminum poles; G

Brackets

SD-05 Design Data

Design Data for luminaires; G

Operating test

Submit operating test results as stated in paragraph entitled "Field Quality Control."

SD-07 Certificates

Luminaire Useful Life Certificate

Submit certification from the manufacturer indicating the expected useful life of the luminaires provided. The useful life shall be directly correlated from the IES LM-80 test data using procedures outlined in IES TM-21. Thermal properties of the specific luminaire and local ambient operating temperature and conditions shall be taken into consideration.

SD-10 Operation and Maintenance Data

LED Luminaire Warranty

1.4 QUALITY ASSURANCE

1.4.1 Drawing Requirements

1.4.1.1 Luminaire Drawings

Include dimensions, effective projected area (EPA), accessories, and installation and construction details. Photometric data, including zonal lumen data, average and minimum ratio, aiming diagram, and computerized candlepower distribution data shall accompany shop drawings.

1.4.1.2 Poles

Include dimensions, wind load determined in accordance with AASHTO LTS, pole deflection, pole class, and other applicable information.

1.4.2 Photometric Plan

For LED luminaires, include computer-generated photometric analysis of the "designed to" values for the "end of useful life" of the luminaire installation using a light loss factor of 0.7. For LED and all other types of luminaires, the submittal shall include the following:

Horizontal illuminance measurements at finished grade, taken at a maximum of every 10 feet.

Vertical illuminance measurements at 5 feet above finished grade.

Minimum and maximum footcandle levels.

Average maintained footcandle level.

Maximum to minimum ratio for horizontal illuminance only.

1.4.3 Design Data for Luminaires

a. Provide distribution data according to IES classification type as defined in IES HB-10.

b. Shielding as defined by IES RP-8 or B.U.G. rating for the installed position as defined by IES TM-15.

c. Provide safety certification and file number for the luminaire family. Include listing, labeling and identification per NFPA 70 (NEC). Applicable testing bodies are determined by the US Occupational Safety Health Administration (OSHA) as Nationally Recognized Testing Laboratories (NRTL) and include: CSA (Canadian Standards Association), ETL (Edison Testing Laboratory), and UL (Underwriters Laboratories).

d. Provide long term lumen maintenance projections for each LED luminaire in accordance with IES TM-21. Data used for projections shall be obtained from testing in accordance with IES LM-80.

e. Provide wind loading calculations for luminaires mounted on poles. Weight and effective projected area (EPA) of luminaires and mounting brackets shall not exceed maximum rating of pole as installed in particular wind zone area.

1.4.4 Regulatory Requirements

In each of the publications referred to herein, consider the advisory provisions to be mandatory, as though the word, "shall" had been substituted for "should" wherever it appears. Interpret references in these publications to the "authority having jurisdiction," or words of similar meaning, to mean the Contracting Officer. Equipment, materials, installation, and workmanship shall be in accordance with the mandatory and advisory provisions of NFPA 70 unless more stringent requirements are specified or indicated.

1.4.5 Standard Products

Provide materials and equipment that are products of manufacturers regularly engaged in the production of such products which are of equal material, design and workmanship. Products shall have been in satisfactory commercial or industrial use for 2 years prior to bid opening. The 2-year period shall include applications of equipment and materials under similar circumstances and of similar size. The product shall have been on sale on the commercial market through advertisements, manufacturers' catalogs, or brochures during the 2-year period. Where two or more items of the same class of equipment are required, these items shall be products of a single manufacturer; however, the component parts

of the item need not be the products of the same manufacturer unless stated in this section.

1.4.5.1 Alternative Qualifications

Products having less than a 2-year field service record will be acceptable if the manufacturer has been regularly engaged in the design and production of high intensity discharge roadway and area luminaires for a minimum of 15 years. Products shall have been in satisfactory commercial or industrial use for 15 years prior to bid opening. The product shall have been on sale on the commercial market through advertisements, manufacturers' catalogs, or brochures during the 15-year period.

1.4.5.2 Material and Equipment Manufacturing Date

Products manufactured more than 1 year prior to date of delivery to site shall not be used, unless specified otherwise.

1.5 DELIVERY, STORAGE, AND HANDLING OF POLES

1.5.1 Aluminum Poles

Do not store poles on ground. Support poles so they are at least one foot above ground level and growing vegetation. Do not remove factory-applied pole wrappings until just before installing pole.

1.6 WARRANTY

The equipment items shall be supported by service organizations which are reasonably convenient to the equipment installation in order to render satisfactory service to the equipment on a regular and emergency basis during the warranty period of the contract.

1.6.1 LED Luminaire Warranty

Provide Luminaire Useful Life Certificate.

The equipment items shall be supported by service organizations which are reasonably convenient to the equipment installation in order to render satisfactory service to the equipment on a regular and emergency basis during the warranty period of the contract.

a. Provide a written five year on-site replacement warranty for material, fixture finish, and workmanship. On-site replacement includes transportation, removal, and installation of new products.

    1. Finish warranty shall include warranty against failure and against substantial deterioration such as blistering, cracking, peeling, chalking, or fading.

    2. Material warranty shall include:

        (a) All power supply units (drivers).

        (b) Replacement when more than 10 percent of LED sources in any lightbar or subassembly(s) are defective or non-starting.

b. Warranty period must begin on date of beneficial occupancy. Contractor shall provide the Contracting Officer signed warranty

certificates prior to final payment.

PART 2 PRODUCTS

2.1 PRODUCT COORDINATION

Products and materials not considered to be luminaires, equipment or accessories are specified in and Section 26 20 00 INTERIOR DISTRIBUTION SYSTEM.

2.2 LED LUMINAIRES

UL 1598, NEMA C82.77 and UL 8750. Provide luminaires as indicated in luminaire schedule and XL plates or details on project plans. Provide luminaires complete with light sources of quantity, type, and wattage indicated. All luminaires of the same type shall be provided by the same manufacturer.

2.2.1 General Requirements

a. LED luminaire housings shall be die cast or extruded aluminum. Housings for luminaires other than LED shall be die cast, extruded, or fabricated aluminum. Fabricated aluminum housings shall have all seams and corners internally welded to resist weathering, moisture and dust.

b. LED luminaires shall be rated for operation within an ambient temperature range of minus 22 degrees F to 122 degrees F.

c. Luminaires shall be UL listed for wet locations per UL 1598. Optical compartment for LED luminaires shall be sealed and rated a minimum of IP65 per NEMA IEC 60529.

d. LED luminaires shall produce a minimum efficacy as shown in the following table, tested per IES LM-79. Theoretical models of initial raw LED lumens per watt are not acceptable.

Application	Luminaire Efficacy in Lumens per Watt
Exterior Pole/Arm-Mounted Area and Roadway Luminaires	65
Exterior Pole/Arm-Mounted Decorative Luminaires	65
Exterior Wall-Mounted Area Luminaires	60
Bollards	35
Parking Garage Luminaires	70

e. Luminaires shall have IES distribution and NEMA field angle classifications as indicated in luminaire schedule on project plans per IES HB-10.

f. Housing finish shall be baked-on enamel, anodized, or baked-on powder coat paint. Finish shall be capable of surviving ASTM B117 salt fog environment testing for 2500 hours minimum without blistering or peeling.

g. Luminaires shall not exceed the following IES TM-15 Backlight, Uplight and Glare (B.U.G.) ratings:

   1. Maximum Backlight (B) rating shall be determined by lighting zone in which luminaire is placed.

   2. Maximum Uplight (U) rating shall be U0.

   3. Maximum Glare (G) rating shall be determined by lighting zone in which luminaire is placed.

h. Luminaires shall be fully assembled and electrically tested prior to shipment from factory.

i. The finish color shall be as indicated in the luminaire schedule or detail on the project plans.

j. Luminaire arm bolts shall be 304 stainless steel or zinc-plated steel.

k. Luminaire lenses shall be constructed of tempered glass or UV-resistant acrylic.

l. The wiring compartment on pole-mounted, street and area luminaires must be accessible without the use of hand tools to manipulate small screws, bolts, or hardware.

m. Incorporate modular electrical connections, and construct luminaires to allow replacement of all or any part of the optics, heat sinks, power supply units, ballasts, surge suppressors and other electrical components using only a simple tool, such as a manual or cordless electric screwdriver.

n. Luminaires shall have a nameplate bearing the manufacturer's name, address, model number, date of manufacture, and serial number securely affixed in a conspicuous place. The nameplate of the distributing agent will not be acceptable.

o. Roadway and area luminaires shall have an integral tilt adjustment of plus or minus 5 degrees to allow the unit to be leveled in accordance with ANSI C136.3.

p. Luminaire must pass 3G vibration testing in accordance with NEMA C136.31.

q. All factory electrical connections shall be made using crimp, locking, or latching style connectors. Twist-style wire nuts are not acceptable.

2.2.2 Luminaire Light Sources

2.2.2.1 LED Light Sources

a. Correlated Color Temperature (CCT) shall be in accordance with NEMA ANSLG C78.377:

Nominal CCT: 4000 degrees K: 3985 plus or minus 275 degrees K

b. Color Rendering Index (CRI) shall be:

Greater than or equal to 70 for 4000 degrees K light sources.

c. Color Consistency:

Manufacturer shall utilize a maximum 4-step MacAdam ellipse binning tolerance for color consistency of LEDs used in luminaires.

2.2.3 Luminaire Power Supply Units (Drivers)

2.2.3.1 LED Power Supply Units (Drivers)

UL 1310. LED Power Supply Units (Drivers) shall meet the following requirements:

a. Minimum efficiency shall be 85 percent.

b. Drive current to each individual LED shall not exceed 600 mA, plus or minus 10 percent.

c. Shall be rated to operate between ambient temperatures of minus 22 degrees F and 104 degrees F 122 degrees F.

d. Shall be designed to operate on the voltage system to which they are connected, typically ranging from 120 V to 480 V nominal.

e. Operating frequency shall be: 50 or 60 Hz.

f. Power Factor (PF) shall be greater than or equal to 0.90.

g. Total Harmonic Distortion (THD) current shall be less than or equal to 20 percent.

h. Shall meet requirements of 47 CFR 15, Class B.

i. Shall be RoHS-compliant.

j. Shall be mounted integral to luminaire. Remote mounting of power supply is not allowed.

k. Power supplies in luminaires mounted under a covered structure, such as a canopy, or where otherwise appropriate shall be UL listed with a sound rating of A.

l. Shall be dimmable, and compatible with a standard dimming control circuit of 0 - 10V or other approved dimming system.

m. Shall be equipped with over-temperature protection circuit that turns light source off until normal operating temperature is achieved.

2.2.4 LED Luminaire Surge Protection

Provide surge protection integral to luminaire to meet C Low waveforms as defined by IEEE C62.41.2, Scenario 1, Location Category C.

2.3 EXTERIOR LUMINAIRE CONTROLS

Controls shall comply with Section 9 of ASHRAE 90.1 - IP . Provide a control system interface within each luminaire that is compatible with the energy management or control system used by the utility department in charge of the project area for control of site lighting.

2.3.1 Photocell

UL 773 or UL 773A. Photocells shall be hermetically sealed, silicon diode light sensor type, 50/60 Hz with single-pole, single- or double-throw contacts. Photocell shall be designed to fail to the ON position. Housing shall be constructed of polycarbonate, die cast aluminum, or UV stabilized polypropylene, rated to operate within a temperature range of minus 40 to 158 degrees F. Photocell shall turn on at 1-3 footcandles and turn off at 3 to 15 footcandles. A time delay shall prevent accidental switching from transient light sources. Provide a directional lens in front of the cell to prevent fixed light sources from creating a turnoff condition. Provide photocell with metal oxide varistor (MOV) type surge protection. Photocell shall be mounted directly to luminaire or on pole at manufacturer's remcommended mounting height.

2.3.2 Motion Sensor

NEMA WD 7, UL 773A. Provide passive infrared type sensors with 360 degree coverage, time delay that can be adjusted from 15 seconds to 15 minutes, and "fail to ON position" default state. Sensors shall be located to achieve coverage of areas as indicated on project plans. Coverage patterns shall be derated as recommended by manufacturer based on mounting height of sensor and any obstructions such as trees. Do not use gross rated coverage in manufacturer's product literature. Sensors installed integral to the luminaire must be provided by the luminaire manufacturer. Sensors shall have an integral light level sensor that does not allow luminaires to operate during daylight hours and shall be designed to operate on a voltage of 120/277 VAC. Provide sensors to operate in conjunction with dimming controllers that lower LED luminaires to a 50 percent output. Sensor shall be mounted directly to luminaire or on pole at manufacturer's remcommended mounting height.

2.4 POLES

Provide poles designed for wind loading of 100 miles per hour determined in accordance with AASHTO LTS while supporting luminaires and all other appurtenances indicated. The effective projected areas of luminaires and appurtenances used in calculations shall be specific for the actual products provided on each pole. Poles shall be anchor-base type designed for use with underground supply conductors. Poles shall have oval-shaped handhole having a minimum clear opening of 2.5 by 5 inches. Handhole cover shall be secured by stainless steel captive screws. Metal poles shall have an internal grounding connection accessible from the handhole

near the bottom of each pole. Scratched, stained, chipped, or dented poles shall not be installed.

2.4.1 Aluminum Poles

Provide aluminum poles manufactured of corrosion resistant aluminum alloys conforming to AASHTO LTS for Alloy 6063-T6 or Alloy 6005-T5 for wrought alloys and Alloy 356-T4 (3,5) for cast alloys. Poles shall be seamless extruded or spun seamless type with minimum 0.188 inch wall thickness. Provide a pole grounding connection designed to prevent electrolysis when used with copper ground wire. Tops of shafts shall be fitted with a round or tapered cover. Base shall be anchor bolt mounted, made of cast 356-T6 aluminum alloy in accordance with ASTM B108/B108M and shall be machined to receive the lower end of shaft. Joint between shaft and base shall be welded. Base cover shall be cast 356-T6 aluminum alloy in accordance with ASTM B108/B108M. Hardware, except anchor bolts, shall be either 2024-T4 anodized aluminum alloy or stainless steel. Aluminum poles and brackets for area lighting shall have a finish to match fixtures and shall not be painted. Manufacturer's standard provision shall be made for protecting the finish during shipment and installation. Minimum protection shall consist of spirally wrapping each pole shaft with protective paper secured with tape, and shipping small parts in boxes.

2.5 BRACKETS AND SUPPORTS

ANSI C136.3, ANSI C136.13, and ANSI C136.21, as applicable. Pole brackets shall be not less than 1 1/4 inch aluminum secured to pole. Slip-fitter or pipe-threaded brackets may be used, but brackets shall be coordinated to luminaires provided, and brackets for use with one type of luminaire shall be identical. Brackets for pole-mounted street lights shall correctly position luminaire no lower than mounting height indicated. Mount brackets not less than 24 feet above street. Special mountings or brackets shall be as indicated and shall be of metal which will not promote galvanic reaction with luminaire head.

2.6 POLE FOUNDATIONS

Anchor bolts shall be steel rod having a minimum yield strength of 50,000 psi; the top 12 inches of the rod shall be galvanized in accordance with ASTM A153/A153M. Concrete shall be as specified in Section 03 30 00 CAST-IN-PLACE CONCRETE.

2.7 EQUIPMENT IDENTIFICATION

2.7.1 Manufacturer's Nameplate

Each item of equipment shall have a nameplate bearing the manufacturer's name, address, model number, and serial number securely affixed in a conspicuous place; the nameplate of the distributing agent will not be acceptable.

2.7.2 Labels

Provide labeled luminaires in accordance with UL 1598 requirements. Luminaires shall be clearly marked for operation of specific light sources and ballasts according to proper light source type. The following light source characteristics shall be noted in the format "Use Only _____":

e. Correlated color temperature (CCT) and color rendering index (CRI) for

all luminaires.

Markings related to lamp type shall be clear and located to be readily visible to service personnel, but unseen from normal viewing angles when lamps are in place.

2.8 FACTORY APPLIED FINISH

Electrical equipment shall have factory-applied painting systems which shall, as a minimum, meet the requirements of NEMA 250 corrosion-resistance test.

PART 3 EXECUTION

3.1 INSTALLATION

Electrical installations shall conform to IEEE C2, NFPA 70, and to the requirements specified herein.

3.1.1 Aluminum Poles

Provide pole foundations with galvanized steel anchor bolts, threaded at the top end and bent 90 degrees at the bottom end. Provide ornamental covers to match pole and galvanized nuts and washers for anchor bolts. Concrete for anchor bases, polyvinyl chloride (PVC) conduit ells, and ground rods shall be as specified in Section 33 71 02 UNDERGROUND ELECTRICAL DISTRIBUTION. Thoroughly compact backfill with compacting arranged to prevent pressure between conductor, jacket, or sheath and the end of conduit ell. Adjust poles as necessary to provide a permanent vertical position with the bracket arm in proper position for luminaire location.

3.1.2 Pole Setting

Depth shall be as indicated. Poles in straight runs shall be in a straight line. Dig holes large enough to permit the proper use of tampers to the full depth of the hole. Place backfill in the hole in 6 inch maximum layers and thoroughly tamp. Place surplus earth around the pole in a conical shape and pack tightly to drain water away.

3.1.3 GROUNDING

Ground noncurrent-carrying parts of equipment including metal poles, luminaires, mounting arms, brackets, and metallic enclosures as specified in Section 33 71 02 UNDERGROUND ELECTRICAL DISTRIBUTION. Where copper grounding conductor is connected to a metal other than copper, provide specially treated or lined connectors suitable for this purpose.

3.1.4 FIELD APPLIED PAINTING

Paint electrical equipment as required to match finish of adjacent surfaces or to meet the indicated or specified safety criteria. Painting shall be as specified in Section 09 90 00 PAINTS AND COATINGS.

3.2 FIELD QUALITY CONTROL

Upon completion of installation, verify that equipment is properly installed, connected, and adjusted. Conduct an operating test after 100 hours of burn-in time to show that the equipment operates in accordance

with the requirements of this section.

-- End of Section --

THIS PAGE HAS BEEN INTENTIONALLY LEFT BLANK

SECTION 27 21 01.00 20

VIDEO INTERCOMMUNICATION SYSTEM
04/06

PART 1 GENERAL

1.1 REFERENCES

The publications listed below form a part of this specification to the extent referenced. The publications are referred to within the text by the basic designation only.

ACOUSTICAL SOCIETY OF AMERICA (ASA)

ASA S3.2	(2009; R 2014) Method for Measuring the Intelligibility of Speech Over Communication Systems (ASA 85)

INSTITUTE OF ELECTRICAL AND ELECTRONICS ENGINEERS (IEEE)

IEEE C62.41.1	(2002; R 2008) Guide on the Surges Environment in Low-Voltage (1000 V and Less) AC Power Circuits
IEEE C62.41.2	(2002) Recommended Practice on Characterization of Surges in Low-Voltage (1000 V and Less) AC Power Circuits

INSULATED CABLE ENGINEERS ASSOCIATION (ICEA)

ICEA S-90-661	(2012) Category 3, 5, & 5e Individually Unshielded Twisted Pair Indoor Cables for Use in General Purpose and LAN Communications Wiring Systems Technical Requirements

NATIONAL ELECTRICAL MANUFACTURERS ASSOCIATION (NEMA)

ANSI/NEMA WC 66	(2013) Performance Standard for Category 6 and Category 7 100 Ohm Shielded and Unshielded Twisted Pairs

NATIONAL FIRE PROTECTION ASSOCIATION (NFPA)

NFPA 70	(2014; AMD 1 2013; Errata 1 2013; AMD 2 2013; Errata 2 2013; AMD 3 2014; Errata 3-4 2014; AMD 4-6 2014) National Electrical Code

TELECOMMUNICATIONS INDUSTRY ASSOCIATION (TIA)

TIA-568-C.1	(2009; Add 2 2011; Add 1 2012) Commercial Building Telecommunications Cabling Standard
TIA-568-C.2	(2009; Errata 2010) Balanced Twisted-Pair Telecommunications Cabling and Components

Standards

TIA-607	(2011b) Generic Telecommunications Bonding and Grounding (Earthing) for Customer Premises

UNDERWRITERS LABORATORIES (UL)

UL 444	(2008; Reprint Apr 2015) Communications Cables
UL 50	(2007; Reprint Apr 2012) Enclosures for Electrical Equipment, Non-environmental Considerations
UL 6	(2007; Reprint Nov 2014) Electrical Rigid Metal Conduit-Steel
UL 797	(2007; Reprint Dec 2012) Electrical Metallic Tubing -- Steel

1.2 RELATED REQUIREMENTS

Section 26 00 00.00 20 BASIC ELECTRICAL MATERIALS AND METHODS, applies to this section, with the additions and modifications specified herein.

1.3 SYSTEM DESCRIPTION

Provide a complete and integrated Video Intercommunications System (VIS). VIS consists of the following subsystems and features.

1.3.1 Performance Requirement for Video Intercommunications System

Solid state, modular in design, and shall be of the wired type with a single master with remote stations. Station shall have capacity for later expansion of master and remote stations without sacrificing any equipment or feature performance.

1.3.1.1 System Performance

Provide system with normally acceptable speech intelligibility, defined as a score of at least 75 percent obtained utilizing the phonetically balanced monosyllabic work intelligibility test in accordance with ASA S3.2.

1.3.2 Components

a. Door Stations (DS)

b. Master Stations (MS)

c. Central Exchange Units (CEU)

d. Power Supply (PSU)

Include materials not normally furnished by the manufacturer with the VIS equipment as specified in:

a. Section 33 71 02 UNDERGROUND ELECTRICAL DISTRIBUTION

b. Section 26 20 00 INTERIOR DISTRIBUTION SYSTEM

1.3.3 Operation

1.3.3.1 Door Station to Master Station Communication:

a. Priority levels for calls from remote stations:

1. Normal
2. Priority

b. After pressing "CALL" button on door station, the calling tone rings on the master station (for normal call, intermittent tremolo sound; for priority call, rapid intermittent tremolo sound) and selector button LED for individual door station flashes (double-flash for priority call). Video from door station shall be displayed on master station monitor. Call tone continues to ring until answered or is timed out (based on setting). You can stop the calling tone by pressing the "OFF" button.

c. Pressing the individual door station selector button stops the associated LED from flashing. The LED stays lit and you can talk hands-free to that station. If only the "TALK" button is pressed to answer a call, hands-free communication initiates with door station at the highest priority call. The talk LED lights when you talk, and goes off as you listen to caller.

d. Press the "OFF" button again to end communication. Call also ends automatically when set talk limit is reached.

e. Holding down the "TALK" button for a minimum of 1 second switches communications to press-to-talk mode. Hold down "TALK" button to talk and release to listen to caller. You cannot switch back from press-to-talk communication to hands-free communication.

f. If another master station presses selector button of an in-use door station or in-use master station, a busy signal is heard at the master station.

g. Microphone is muted while you hold down privacy button on master station while in communication.

h. Master station can display calls from up to 8 stations at the same time. If there are more than 8 incoming calls, they will be displayed in order of priority and time of call.

i. You can adjust calling tone, transmit volume, and receive volume with volume controls at bottom of the master station.

1.3.3.2 Calling Master Station from Another Master Station and Communicating:

a. Press individual selector button of master station.

b. Pre-tone sounds both master stations and starts hands-free communication. Talk LED lights when you talk, and goes off as you listen to caller.

c. Press the "OFF" button to end communication. Calls can be made from

either master station. Call also ends automatically when set communication end time is reached.

d. If called master station has privacy mode set (privacy settings button is lit), communication is only 1-way, from calling master station to called master station, and nothing can be heard from called master side. Pressing the "TALK" button on called master station for a minimum of 1 second starts communication. Hold down "TALK" button to talk and release to listen to caller.

e. A master station cannot be called while it is communicating.

1.3.3.3 Privacy Function

a. To put master station into privacy mode (to prevent monitoring from other stations), press privacy button (LED lights up).

b. To cancel privacy mode, press privacy button again (LED goes out).

c. Privacy setting cannot be changed while in communication.

1.3.3.4 CO Line Call from Door Station and Communication

a. If "CALL" button is pressed at door station while CO Transfer feature is set (with CO Transfer button lit), call tone rings on master station (for normal call, intermittent tremolo sound; for priority call, rapid intermittent tremolo sound) and selector button LED for individual door station flashes (double-flash for priority call). At same time, telephone call is placed to programmed CO line number.

b. You can communicate with door station from telephone.

c. You can end communication at telephone. Communication also ends automatically when set talk time limit is reached. About 10 seconds before end of call, you will hear alarm sound on telephone.

d. Maximum duration for CO line call is 300 seconds, even if call timer is set to "Infinite".

e. Using this function requires Viking Electronics, Inc. "K-1900-5 Hot-Line Pulse Dialer".

f. If there are multiple calls, call from door station with highest call priority is transferred.

g. Answering at any master station during CO transfer feature will stop CO transfer.

8. There are no functions, such as for door release and dial-in, from telephone.

1.3.3.5 All Call (Normal Master Station Paging)

a. Pressing the "ALL CALL" button on master station starts all individual master station selector button LEDs flashing slowly. You can clear undesired master station from All Call by pressing the individual master station selector button with flashing LED, which will turn off LED. Pressing that button again makes that master station part of All Call again and makes LED flash.

b. Pressing the "TALK" button, lights the send LED and all individual master station selector buttons stop flashing and stay lit. Pre-tone sounds on target master stations and they can be talked to. At this time, you cannot hear audio from other master stations.

c. Press "OFF" button to end. You can end call for individual master station by pressing its "OFF" button.

d. All Call announcements do not go to master stations that are in use.

e. During All Call, if you press individual master station selector button on calling master station or press individual master station selector button or TALK button on 1 of the other master stations, communications switch to hands-free between master stations.

e. There is no function for hands-free reply from called master station during All Call mode.

f. If you press down the "ALL CALL" button but do not start talking within 30 seconds, system goes back to standby mode. You can also return to standby by pressing the "OFF" button.

1.3.3.6 All Call (Priority Master Station Paging)

a. Pressing the "ALL CALL" button on master station starts all individual master station selector button LEDs flashing slowly.

b. Pressing the "ALL CALL" button again increases the flash rate. You can clear undesired master station from All Call by pressing individual master station selector button with flashing LED, which will turn off LED. Pressing that button again makes that master station part of All Call again and makes LED flash.

c. Pressing the "TALK" button lights the "TALK" LED and all individual master station selector buttons stop flashing and stay lit. Pre-tone sounds on all master stations and all can be called. At this time, you cannot hear audio from other master stations.

d. Press the "OFF" button to end. You can end call for individual master station by pressing its "OFF" button.

e. Communication of master station being used is cancelled and All Call takes priority. Before communication of master station being used is cancelled, you hear cancel warning sound.

f. During All Call, if you press an individual master station selector button on calling master station or press individual master station selector button or "TALK" button on one of the other master stations, communications switch to hands-free between those two master stations.

g. There is no function for talk back from master station receiving an All Call announcement.

h. If you press down the "ALL CALL" button but do not start talking within 30 seconds, system goes back to standby mode. You can also return to standby by pressing OFF button.

1.3.3.7 Monitor

a. Pressing an individual door station selector button allows you to hear audio and view image from that door station.

b. Press the "OFF" button to end. Call also ends automatically when set communication end time is reached.

c. While door station is communicating with or monitored by a master station, that door station cannot be monitored from another master station.

d. Pressing the "TALK" button while monitoring starts hands-free communication mode with that door station.

1.3.3.8 Scan Monitor

a. When scan monitor button is pressed, door stations that have been enabled for "Scan Monitor" in programming can be monitored sequentially for a specified time interval (configured in programming).

b. Monitoring always initiates from target door station with lowest number.

c. Pressing the scan monitor button while individually monitoring the target door station, starts monitoring with the next door station in line.

d. Pressing the scan monitor button while monitoring a non-target door station, monitoring starts with the first door station enabled for scan monitoring.

e. Press the "OFF" button to end.

f. Communication/video channel 2 is always used for scan monitoring. During scan monitoring, video signal is always outputted from video output port 2 (V2). Scan monitoring is not possible when communication/video channel 2 is being used, even if busy LED is not illuminated.

g. Only one master station at a time can perform scan monitoring.

h. Pressing the "TALK" button during scan monitoring starts hands-free communication mode with that door station.

i. Pressing the individual door station selector button or scan monitor button during scan monitoring switches monitoring to monitoring that individual door station.

j. If master station receives call from door station during scan monitoring, scan monitor function ends automatically and shall be restarted manually.

k. Scan monitoring continues without limit until it is cancelled, but master station LCD monitor goes out after 10 minutes. Outside video output continues even with LCD off. Pressing the scan monitor button with the LCD off turns on the LCD again.

l. Pressing the "TALK" button during scan monitoring starts communication

mode with door station being monitored.

1.3.3.9 Door Release

a. Pressing the door release button during communication or monitoring with door station activates the door release function with that door.

b. Door cannot be operated from outside telephone.

c. LED stays lit while door release function is activated.

d. Door release contacts can be set to Normally Open or Normally Closed via program configuration.

e. Door release can be initiated at the door station when the correct entry code is entered into the integrated key pad. Door associated with door station is the only door released.

1.3.3.10 Priority

a. Calls have priority based on the time the call was initiated. (Earlier call has priority over later call).

b. Communication Priority, from Highest to Lowest:

1. Door station, telephone line communication.
2. Priority All Call.
3. Door station to master station communication.
4. Master station to master station communication.
5. Normal All Call.
6. Monitor
7. Scan monitor.

1.4 SUBMITTALS

Government approval is required for submittals with a "G" designation; submittals not having a "G" designation are for information only. When used, a designation following the "G" designation identifies the office that will review the submittal for the Government. Submit the following in accordance with Section 01 33 00 SUBMITTAL PROCEDURES:

SD-02 Shop Drawings

Video Intercommunication System; G

Submit for overall system and for each major component. Illustrate how each item of equipment will function in the system and include an overall system schematic indicating relationship of intercommunication units on one diagram identifying type, size, and number of wiring, conduits and each major component.

Component Enclosure; G

Pedestal Installation; G

SD-03 Product Data

Materials and equipment for video intercommunications system; G

Cables and raceways

Surge protection

Component Enclosure; G

Pedestal; G

SD-10 Operation and Maintenance Data

Video Intercommunication System, Data Package 5

Submit in accordance with Section 01 78 23 OPERATION AND MAINTENANCE DATA.

PART 2 PRODUCTS

2.1 EQUIPMENT AND COMPONENTS

Equipment and components shall conform to applicable requirements of NFPA 70. Units of the same type of the equipment shall be product of single manufacturer. Units to be mounted outside or subject to inclement conditions shall be weatherproof or to be mounted in weatherproof enclosures.

2.1.1 Video Intercommunication System

Provide master stations and remote stations in the quantities indicated. Each master station shall selectively communicate with any other master station and any door station by actuating an appropriate selector switch.

2.1.1.1 Integrated Security and Communication System

a. Power Source: 24V DC via 120V-24VDC power supplies.

b. Door Station Calling:

1. Tremolo call tone programmable from 10 to 600 seconds or infinite.
2. LCD monitor remains on for duration of call-in and communication up to a maximum of 10 minutes.

c. Master Station Calling: Select station to call, pre-tone sounds, then speak hands-free or push-to-talk.

d. Communication:

1. Auto: VOX.
2. Manual: Press-to-talk, release-to-listen.

e. Camera: CCD 250,000 pixels.

f. Video Monitor:

1. 3.5-inch direct view TFT color LCD.
2. Scanning Lines: 525

g. Door Release: N/O or N/C, programmable per station.

h. Door Release Contact: 24 V AC/DC, 0.5 A.

i. Wiring: CAT-6 UTP-4 homerun from each station to CEU.

1. Door Station to CEU: 980 feet maximum.
2. Master Station to CEU: 980 feet maximum.

j. CO Line Transfer Adaptor: Viking Electronics, Inc. "K-1900-5 Hot-Line Pulse Dialer".

2.1.1.2 Central Exchange Unit (CEU)

Connects a maximum of 4 master stations and 8 door stations.

a. Current Consumption:

1. Video: 620 mA maximum
2. Audio: 650 mA maximum

b. Video Output:

1. NTSC standard 1 Vpp (0.7 to 1.4 Vpp).
2. Two BNC.

c. Video Output Trigger:

1. Open collector output
2. 24 V DC, 30 mA
3. Two RJ-45

2.1.1.3 Audio/Color Video Master Station

Desk-mounted master stations with the following features:

a. Wiring: CAT-6 homerun wired to CEU.

b. Buttons:

1. 8 individual door station selector buttons with LED
2. 8 individual master station selector buttons with LED
3. Door release button with LED
4. Scan monitor button with LED
5. CO line transfer button with LED
6. Privacy button with LED
7. Oversized "TALK" button with LED to activate VOX or PTT style communication
8. "ALL CALL" button
9. "OFF" button

c. Occupied LED

d. Speaker

e. Microphone

f. Volume Controls:

1. Receive Switch: Low, medium, high
2. Transmit Switch: Low, medium, high
3. Call tone

g. LCD brightness control

h. Jacks:

1. Headset receiver
2. Headset microphone

i. Headset Volume Controls:

1. Receiver
2. Microphone

j. Directory Cards and Covers:

1. Master stations
2. Door stations

k. Reset switch

l. RJ-45 jack for connection to the CEU.

m. Connector for add-on selector on master station.

n. Door call-in indicator.

o. Hands-free or push-to-talk communication.

p. All Call to master stations.

q. Scan monitoring.

r. Selective door release.

s. Privacy and mute functions.

t. Wall or desk mount. Metal bracket included for wall mounting.

u. Multi-Pin Connector:

1. Video output from master station.
2. External signaling of call tones (through IER-2 or activation of TAR-3).
3. Footswitch activation for TALK function.

v. Operating Temperature: 32 degrees F to 104 degrees F (0 degrees C to 40 degrees C).

w. Monitor: 3.5-inch color LCD.

x. Outside Video Output: NTSC standard 1 Vpp (0.7 to 1.4 Vpp).

2.1.1.4 Audio and Fixed Color Video Door Station

a. Integrated 10-digit, 12-button, telephone style key pad.

b. Faceplate: Stainless Steel. Flush mount in outdoor enclosure.

c. Call Button: Metal

d. Camera with clear Lexan cover.

e. RJ-45 jack for connection to the CEU.

f. Speaker

g. Microphone

h. Directory card.

i. White Illumination LEDs: Automatically turns on in low-light conditions.

j. Operating Temperature: 14 degrees F to 140 degrees F (minus 10 degrees C to 60 degrees C).

k. Vandal resistant.

2.1.1.5 Outdoor Enclosure and Pedestal

a. Pedestal: 2" x 2", 1/8" thick cold rolled steel pedestal with curb-mount base plate with 5/8" anchor bolt holes. Black finish.

b. Outdoor Enclosure: Steel, weatherproof, vandal resistant enclosure with hinged lockable door and angled weather shroud. Black finish.

2.2 CABLES AND RACEWAYS

Raceways shall conform to UL 6 and UL 797. Cabinets and boxes shall conform to UL 50.

Provide cable in compliance with NFPA 70 and performance characteristics in accordance with TIA-568-C.1. Cables for use in air plenums shall be UL classified low smoke and low flame in accordance with NFPA 70. Cables installed in conduit underground and within and under slabs shall be UL listed and labeled for wet locations in accordance with NFPA 70.

2.2.1 Cable

Provide copper cable, UTP, 100 ohm in accordance with TIA-568-C.2, UL 444, ANSI/NEMA WC 66, ICEA S-90-661. Provide four each individually twisted pair, minimum size 24 AWG conductors, Category 6, with a blue thermoplastic jacket. Cable shall be imprinted with manufacturers name or identifier, flammability rating, gauge of conductor, transmission performance rating (category designation) and length marking at regular intervals in accordance with ICEA S-90-661. Provide plenum (CMP), riser (CMR), or general purpose (CM or CMG) communications rated cabling in accordance with NFPA 70. Substitution of a higher rated cable shall be permitted in accordance with NFPA 70.

2.3 SURGE PROTECTION

Major components of the system such as master stations and door stations, shall have a device, either internal or external, which shall provide protection against voltage spikes and current surges conforming to IEEE C62.41.1 and IEEE C62.41.2.

PART 3 EXECUTION

3.1 INSTALLATION

3.1.1 General

Install all system components and appurtenances in accordance with the manufacturer's instructions and as specified herein.

3.1.2 Wiring

Wiring shall be installed in rigid metal conduit, intermediate metal conduit, cable tray, or electric metallic tubing as specified in Section 26 20 00 INTERIOR DISTRIBUTION SYSTEM and 33 71 02 UNDERGROUND ELECTRICAL DISTRIBUTION. Wiring for signal circuits shall terminate on identified terminal blocks in cabinets and master station enclosures.

Homerun cables from stations to the CEU. Keep each cable run to a maximum of 980 feet from communication device to CEU. Maintain twists of cable pairs to point of termination or no more than 0.5 inch untwisted. Cross-connect cables, where necessary, using CAT-6 rated punch blocks and components. Do not splice or bridge cables.

3.1.3 Grounding

Provide in accordance with TIA-607, NFPA 70 and as specified in Section 26 20 00 INTERIOR DISTRIBUTION SYSTEM.

3.2 FIELD QUALITY CONTROL

3.2.1 Cable Testing

Perform telecommunications cabling inspection, verification, and performance tests in accordance with TIA-568-C.1, TIA-568-C.2.

3.2.2 Cable Inspection

Visually inspect UTP jacket materials for UL or third party certification markings. Inspect cabling terminations in telecommunications rooms and at workstations to confirm color code for T568A or T568B pin assignments, and inspect cabling connections to confirm compliance with TIA-568-C.1, TIA-568-C.2. Visually confirm Category 6, marking of outlets, cover plates, outlet/connectors, and patch panels.

3.2.3 Cable Verification Tests

UTP backbone copper cabling shall be tested for DC loop resistance, shorts, opens, intermittent faults, and polarity between conductors, and between conductors and shield, if cable has overall shield. Test operation of shorting bars in connection blocks. Test cables after termination but prior to being cross-connected.

3.2.4 Acceptance Tests

After installation has been completed, Contractor shall conduct an acceptance test in the presence of the Contracting Officer or its representative, to demonstrate that the equipment operates in accordance with specification requirements. Contractor shall notify the Contracting Officer 2 weeks prior to performance of tests. The acceptance tests shall

include originating and accepting messages at specified stations, at proper volume levels, without cross-talk or noise from other links or non-designated units. Test shall utilize the phonetically balanced monosyllabic work intelligibility test in accordance with ASA S3.2. In order to be acceptable a score of at least 75 percent must be obtained for each system test.

3.2.5 Retesting

Rectify deficiencies indicated by tests and completely retest work affected by such deficiencies at Contractor's expense.

3.3 INSPECTION

Make observations to verify that units and controls are properly labeled, and interconnecting wires and terminals identified.

3.4 ADJUSTING

Adjust integrated security and communication system for proper operation in accordance with manufacturer's instructions.

3.5 DEMONSTRATION AND TRAINING

Demonstrate that integrated security and communication system functions properly. Perform demonstration at final system inspection by qualified representative of manufacturer.

Provide instruction and training of Government's personnel as required for operation of integrated security and communication system. Provide hands-on demonstration of operation of system components and complete system, including user-level program changes and functions. Provide instruction and training by qualified representative of manufacturer.

-- End of Section --

THIS PAGE HAS BEEN INTENTIONALLY LEFT BLANK

SECTION 28 31 76.00 22

INTERIOR COMBINATION EMERGENCY COMMUNICATIONS SYSTEMS
04/16

PART 1 GENERAL

1.1 REFERENCES

The publications listed below form a part of this specification to the extent referenced. The publications are referred to within the text by the basic designation only.

ACOUSTICAL SOCIETY OF AMERICA (ASA)

ASA S3.2	(2009; R 2014) Method for Measuring the Intelligibility of Speech Over Communication Systems (ASA 85)

FM GLOBAL (FM)

FM APP GUIDE	(updated on-line) Approval Guide http://www.approvalguide.com/

INTERNATIONAL ELECTROTECHNICAL COMMISSION (IEC)

IEC 60268-16	(2003; ED 4.0) Sound System Equipment - Part 16: Objective Rating Of Speech Intelligibility By Speech Transmission Index

INTERNATIONAL ORGANIZATION FOR STANDARDIZATION (ISO)

ISO 7240-16	(2007) Fire Detection And Alarm Systems — Part 16: Sound System Control And Indicating Equipment

NATIONAL FIRE PROTECTION ASSOCIATION (NFPA)

NFPA 170	(2015) Standard for Fire Safety and Emergency Symbols
NFPA 70	(2014; AMD 1 2013; Errata 1 2013; AMD 2 2013; Errata 2 2013; AMD 3 2014; Errata 3-4 2014; AMD 4-6 2014) National Electrical Code
NFPA 72	(2016) National Fire Alarm and Signaling Code
NFPA 720	(2015) Standard for the Installation of Carbon Monoxide (CO) Detection and Warning Equipment

UNDERWRITERS LABORATORIES (UL)

UL 2017	(2008; Reprint May 2011) General-Purpose Signaling Devices and Systems
UL 864	(2014) Standard for Control Units and Accessories for Fire Alarm Systems
UL Electrical Constructn	(2015) Electrical Construction Equipment Directory
UL Fire Prot Dir	(2015) Fire Protection Equipment Directory

1.2 DEFINITIONS

Wherever indicated in this specification or on the contract drawings, the equipment, devices, and functions shall be defined as follows:

a. COMBINATION EMERGENCY COMMUNICATIONS SYSTEM: NFPA 72 terminology describing a combination fire alarm and mass notification system where the building mass notification system is integrated with the building fire alarm control unit to form one combined system that performs both functions.

b. COMBINATION EMERGENCY COMMUNICATIONS SYSTEM PANELS (CECP): Combination Emergency Communications System Panel may consist of separate autonomous control unit and fire alarm control unit supplied from the same or different manufacturers, or a single panel supplied by one manufacturer. Where the term "COMBINATION EMERGENCY COMMUNICATIONS SYSTEM PANEL" or "CECP" is utilized the intent is NOT to limit the designer to one manufacturer or a single enclosure. HOWEVER; whether installed as combined or separate panels or provided by one or separate manufacturers, the panels shall be integrated in their controls and performance to meet the requirements of this section and NFPA 72.

c. AUTONOMOUS CONTROL UNIT (ACU): The primary control unit for the building mass notification system portion of the CECP. ACU may be physically separate from, or a integral part, of the FACU

d. FIRE ALARM CONTROL UNIT (FACU): Fire alarm system component portion of the CECP, provided with primary and secondary power sources, which receives signals from initiating devices or other fire alarm control units, and processes these signals to determine part or all of the required fire alarm system output function(s). FACU may be separate from or a portion of the ACU. Where more than one fire alarm control unit is installed in the building, one panel shall be designated as the Master Fire Alarm Control Unit.

g. SUPPLEMENTARY NOTIFICATION APPLIANCE CIRCUIT(SNAC)and AUXILIARY POWER SUPPLY PANELS: A panel separate from the "combination emergency communications system panel"(s), usually located remote from the main panel(s). SNAC's are utilized to power visual notification appliance circuits and auxiliary power supplies provide supplementary power to devices or functions requiring power in addition to that available from the SLC.

h. MONITOR MODULE: Term utilized to describe a Signaling Line

Circuit Interface as defined by NFPA 72.

i. CONTROL MODULE AND RELAY MODULE: Terms utilized to describe an "Emergency Control Function Interface" as defined in NFPA 72.

j. TERMINAL CABINET: A steel cabinet with locking, hinge-mounted door that terminal strips are securely mounted inside. Utilizing tape or glue is not an acceptable means of mounting terminal strips.

k. TEXTUAL AUDIBLE APPLIANCES: Term utilized by NFPA 72 to describe speaker appliances. The term "textual audible appliance" is utilized because the term "speaker" might also refer to a person who is speaking.

1.3 SYSTEM DESCRIPTION

1.3.1 Scope

This work includes completion of design and providing a new, complete, and modifying the existing combination emergency communications system as described herein and on the contract drawings for MCB Cherry Point Central Heating Plant.

Include in the system all necessary wiring, raceways, pull boxes, terminal cabinets, outlet and mounting boxes, control equipment, alarm, and supervisory signal initiating devices, and other accessories and miscellaneous items required for a complete operating system even though each item is not specifically indicated or described. Provide systems complete and ready for operation.

Equipment and devices shall be compatible and operable with existing building combination fire alarm and mass notification system. Equipment shall not impair reliability or operational functions of the existing system. The existing building system panel is Johnson Controls Model 640/3030

Equipment and devices shall be compatible and operable with the existing fire alarm reporting system and shall not impair reliability or operational functions of the existing system.

a. Provide equipment, materials, inspection, and testing in strict accordance with the required and advisory provisions of NFPA 72, ISO 7240-16, and IEC 60268-16 except as modified herein. The system layouts on the contract drawings show the intent of coverage and are shown in suggested locations. Final quantity, system layout, and coordination are the responsibility of the Contractor.

1.3.2 Technical Data and Computer Software

Computer software and technical data relating to computer software that are specifically identified in this project, and may be defined/required in other specifications, shall be delivered in accordance with the CONTRACT CLAUSES. Data to be submitted shall include complete system, equipment, and software descriptions. Descriptions shall show how the equipment will operate as a system to meet the performance requirements of the contract. The data package shall also include the following listed. Failure to fully comply with the following stipulations shall result in the removal and replacement of the combination emergency communications system at no cost to the Government. Requests for extension of time for

any delay to the completion of the project due to the removal, redesign, resubmittal process, and replacement of the original system will not be considered. Liquidated damages shall apply and will be accessed in accordance with the contract clauses.

a. Identification of programmable portions of system equipment and capabilities.

b. Description of system revision and expansion capabilities and methods of implementation detailing both equipment and software requirements.

c. Provision of operational software data on all modes of programmable portions of the combination emergency communications system.

d. Description of Fire Alarm Control Unit equipment operation.

e. Description of auxiliary and remote equipment operations.

f. Library of application software.

g. Operation and maintenance manuals.

1.3.3 Keys

Keys and locks for equipment, panels and devices shall be identical. Provide the Contracting Officer with no less than six (6) keys of each type required. Direct requests for keys from all Government personnel to the Contracting Officer. Under no circumstances shall the contractor provide any keys to the building occupants. If any portion of building is occupied during construction or occupants begin moving into the building prior to project completion, the fire alarm contractor shall remove and secure all keys to the combination emergency communications system. All keys and locks shall be mastered to a single key as required by the AHJ.

1.4 SUBMITTALS

Government approval is required for submittals with a "G" designation; submittals not having a "G" designation are for the Prime Contractor Quality Control approval. The NAVFAC MIDLANT Fire Protection Engineer shall review and approve all submittals requiring Government approval.

If permitted by the Contracting Officer, provide electronic submittals. File format of electronic submittal materials shall be portable document format. No other electronic formats shall be accepted. Catalog data shall be first generation scans or manufacturer's originals. Shop drawings shall be plotted to scale. Scale all line weights. Submittals consisting of illegible pdf's shall be returned disapproved without review. One hard copy review set of the entire package, including full scale shop drawings, shall accompany each submittal for use by the NAVFAC MIDLANT Fire Protection Engineer. The single hard copy review set shall be retained by the Government reviewer. The Government reviewer shall digitally stamp, sign and lock the electronic submittal package prior to returning the electronic copy to the Contracting Officer.

Submit the following in accordance with Section 01 33 00 SUBMITTAL PROCEDURES:

SD-01 Preconstruction Submittals

Within 36 days of contract award but no less than 14 days prior to commencing any work on site, the Prime Contractor shall submit the following for review and approval:

Qualifications for Fire Alarm System Subcontractor; G
On Staff Fire Alarm System Designer(s); G
Supervising Fire Alarm Technician; G
Installing Technicians; G
Testing Personnel; G

Contractor SD-02,SD-03 & SD-05 submittals received prior to the review and approval of the Qualifications of the Fire Alarm Subcontractor shall be returned Disapproved Without Review. All resultant delays shall be the sole responsibility of the Prime Contractor.

Contract requirements for the Fire Alarm Contractor to have NICET Certified Fire Alarm Technicians on staff are NOT negotiable. The Prime Contractor's Quality Control Manager shall not endorse nor submit the qualifications for the fire alarm system subcontractor if fire alarm contractor does not have the required NICET Technicians on staff. All resultant delays shall be the sole responsibility of the Prime Contractor.

SD-02 Shop Drawings

Include Annotated catalog data, in table format on the drawings, showing manufacturer's name, model, voltage, and catalog numbers for equipment and components. Submitted shop drawings shall not be smaller than ANSI D (22 in x 34 in).

Wiring Diagrams; G

Provide point-to-point wiring diagrams showing the points of connection and terminals used for electrical field connections in the system, including interconnections between the equipment or systems that are supervised or controlled by the system. Diagrams shall show connections from field devices to the CECP and remote fire alarm control units, initiating circuits, switches, relays and terminals. Point-to-point wiring diagrams shall be job specific. Point-to-point wiring diagrams shall not indicate connections or circuits not being utilized.

Provide complete riser diagrams indicating the wiring sequence of devices and their connections to the control equipment. Include a color-code schedule for the wiring. Include floor plans showing the locations of devices, appliances, and equipment.

System Layout; G

Plan view drawing showing device locations, terminal cabinet locations, junction boxes, other related equipment, conduit routing, conduit sizes, wire counts, wire color-coding, circuit identification in each conduit, and circuit layouts for all floors. Drawings shall comply with the requirements of NFPA 170, and NFPA 72. Clearly identify the locations of isolation modules. Indicate the addresses of all devices, modules, relays,

etc.

System Operation; G

A complete list of device addresses, and corresponding messages.

Provide a complete description of the system operation in matrix format.

As-Built Drawings; G

Provide four sets of detailed as-built drawings. Furnish four sets of CD or DVD discs containing software backup with CAD-based drawings in latest version of AutoCAD *.dwg format of as-built drawings and schematics. Discs shall also include as-built drawings plotted to scale in *.pdf format along with *.pdf copies of the manufacturer's data, and calculations. The drawings shall include complete wiring diagrams showing point-to-point connections between devices and equipment, both factory and field wired. Include a riser diagram and drawings showing the as-built location of devices and equipment. The drawings shall show the system as installed, including deviations from both the contract drawings and the approved shop drawings. These drawings shall be submitted within 14 days after the final acceptance test of the system. At least one copy of the as-built (red-lined) drawings shall be provided at the time of, or prior to, the final acceptance test.

SD-03 Product Data

Provide UL or FM listing cards for equipment provided. Include annotated catalog data, in table format, showing manufacturer's name, model, voltage and catalog numbers for all equipment and components.

Technical Data And Computer Software; G
Wiring and cable; G
Surge protection; G
Ceiling bridges for ceiling mounted appliances; G
Back boxes and conduit; G
Terminal cabinets/assemblies; G
Addressable monitor module; G
Addressable control/relay module; G
Isolation module; G
Multi Criteria Fire/Carbon monoxide detector; G
Manufacturer's installation and maintenance manuals; G

Provide one copy of the most recent Manufacturer's installation and maintenance manuals for each piece of equipment being installed. This data is necessary for use by NAVFAC MIDLANT Fire Protection Engineering when reviewing the contractor's submittal. Manual may be submitted in *.pdf format and submitted directly to NAVFAC MIDLANT Fire Protection Engineering.

SD-05 Design Data

System Operation; G

Provide a complete description of the system operation, in matrix

format, on the shop drawings.

Battery power; G

a. Verify battery capacity exceeds supervisory and alarm power requirements.

1). Substantiate the battery calculations for alarm, alert, and supervisory power requirements. Ampere-hour requirements for each system component and each panel component, and the battery-recharging period, shall be included.

2). Provide complete battery calculations for both the alarm, alert, and supervisory power requirements. Ampere-hour requirements for each system component shall be submitted with the calculations.

b. For battery calculations, use the following assumptions: Assume a starting voltage of 24 VDC for starting the calculations to size the batteries. Calculate the required Ampere-hour for the specified standby time, and then calculate the required Ampere-hour for the specified alarm time. Calculate the nominal battery voltage after operation on batteries for the specified time period.

Voltage Drop Calculations; G

Provide voltage drop calculations to indicate sufficient voltage is available for proper operation of the system and all components, at the minimum rated voltage of the system operating on batteries.

Utilize the lump sum method for voltage drop calculations. Assume the entire appliance load is at the end of the circuit (lump sum). Utilize 16 VDC as the operating voltage of the appliances and 21.6 VDC as the voltage at the circuit terminals.

Spare Capacity Calculations; G

Provide calculations verifying the contract stipulated 25 spare capacity is provided for each notification appliance circuit, FACU/ACU, SNAC panel, and auxiliary power supply panel. Also provide a calculation indicating a 25 percent spare capacity is maintained for each SLC.

SD-06 Test Reports

Field Quality Control; G
Testing Procedures; G
Carbon monoxide detector testing procedures; G

SD-09 Manufacturer's Field Reports

Combination emergency communications system panel (CECP); G

Provide reports on preliminary tests, include printer information. Include the NFPA 72 Record of Completion and NFPA 72 Inspection and Testing Form, with the appropriate test reports. printer generated data shall consist of a unique identifier for each device, combination emergency communications system panel,

initiating device and notification appliance, with an indication of test results, and signature of the factory-trained technician of the control panel manufacturer and equipment installer.

SD-10 Operation and Maintenance Data

Operation and Maintenance (O&M) Instructions; G

Provide four copies of the Operation and Maintenance Instructions, indexed and in booklet form. The Operation and Maintenance Instructions shall be a single volume or in separate volumes, and may be submitted as a Technical Data Package. Manuals shall be approved prior to training.

Original and backup copies of all software delivered for this contract on each type of CD/DVD media utilized.

Instruction of Government Employees; G

The installers training history for the employees involved with this contract.

1.5 QUALITY ASSURANCE

Equipment and devices shall be compatible and operable with existing installation-wide fire alarm reporting and mass notification systems and shall not impair reliability or operational functions of existing system. The installation-wide fire reporting system utilizes DACTdedicated copper phone pair. The existing installation-wide mass notification system will remain.

a. In NFPA publications referred to herein, consider advisory provisions to be mandatory, as though the word "shall" had been substituted for "should" wherever it appears; interpret reference to "authority having jurisdiction" and/or AHJ to mean the Naval Facilities Engineering Command, MIDLANT , Fire Protection Engineer.

b. The recommended practices stated in the manufacturer's literature or documentation shall be considered as mandatory requirements.

c. Devices and equipment for fire alarm service shall be listed by UL Fire Prot Dir or approved by FM APP GUIDE.

1.5.1 Qualifications

1.5.1.1 Qualifications for Fire Alarm System Subcontractor

The Prime Contractor shall be responsible for obtaining the services of a qualified fire alarm system subcontractor for the design and installation of the combination emergency communications system. The firm designated by the Prime Contractor as their qualified fire alarm system subcontractor:

a. Shall have been in existence a minimum of four years prior to contract award.

b. Shall provide proof of previous experience installing a system of equal or greater complexity, utilizing the same equipment to be provided under this contract.

c. Shall provide proof of adequate qualified staffing to meet all of the following requirements:

1.5.1.1.1 On-Staff Fire Alarm System Designer(s)

A qualified fire alarm contractor shall have at least one on staff NICET Level IV SET, (Senior Engineering Technician) fire alarm technician. This technician shall also have proof of factory certified training for the design of the systems utilizing the equipment being installed. The NICET Level IV technician(s) shall be the lead technician responsible for the contractor's design of the combination emergency communications system, including, but not limited to, the selection and design of necessary equipment, battery, power and circuit calculations, provision of the required manufacturers data and the creation and completion of the shop drawings. The submittal materials (drawings, calculations & manufacturer's data) shall bear the stamp and signature of the NICET Level IV technician. RFI's pertaining to the combination emergency communications system shall be reviewed and signed by the NICET Level IV technician prior to submission to the Contracting Officer.

A NICET Level III, ET (Engineering Technician) fire alarm technician may be utilized to create the shop drawings, calculations and submittal material provided the Level III technician is directly supervised by the NICET Level IV technician. The NICET Level IV technician remains responsible for the system design and submittal materials. Both technicians' signatures and stamps shall be included on the submittal material.

1.5.1.1.2 Supervising Fire Alarm Technician

A NICET Level II, AET (Associate Engineering Technician) (minimum) fire alarm technician with a minimum of 8 years experience shall supervise the installation of the combination emergency communications system. The fire alarm technicians supervising the installation of equipment shall also be factory trained in the installation, adjustment, testing, and operation of the equipment specified herein and on the approved shop drawings. Supervising technician shall be a direct employee of the firm designated by the Prime Contractor as their qualified fire alarm system subcontractor.

1.5.1.1.3 Installing Technicians

The installing Contractor shall provide fire alarm technicians with a minimum of four years of experience utilized to assist in the installation and termination devices, appliances, cabinets and panels. The fire alarm technicians installing the equipment shall be factory trained in the installation, adjustment, testing, and operation of the equipment specified herein and on the approved shop drawings. Technicians with minimum NICET Level I or II Certification are preferred. Installing technicians shall be direct employees of the firm designated by the Prime Contractor as their qualified fire alarm system subcontractor.

1.5.1.1.4 Testing Personnel

The installing Contractor shall provide Fire Alarm Technicians with a minimum of eight years of experience utilized to test and certify the installation of the combination emergency communications system devices, appliances, cabinets and panels. The fire alarm technicians testing the equipment shall be factory trained in the installation, adjustment, testing, and operation of the equipment specified herein and on the

approved shop drawings. Testing personnel shall be direct employees of the firm designated by the Prime Contractor as their qualified fire alarm system subcontractor.

1.5.2 Regulatory Requirements

1.5.2.1 Requirements for Fire Protection Service

Equipment and material shall be Listed by UL and listed in UL Fire Prot Dir, UL Electrical Constructn or Approved by FM and listed in FM APP GUIDE. Where the terms "listed" or "approved" appear in this specification, they shall mean listed in UL Fire Prot Dir or FM APP GUIDE. The omission of these terms under the description of any item of equipment described shall not be interpreted as waiving this requirement. All listings or approval by testing laboratories shall be from an existing ANSI or UL published standard.

1.6 DELIVERY, STORAGE, AND HANDLING

Protect equipment delivered and placed in storage from the weather, humidity, and temperature variation, dirt and dust, and other contaminants.

1.7 OPERATION AND MAINTENANCE (O&M) INSTRUCTIONS

The combination emergency communications system Operation and Maintenance Instructions shall include:

a. "Manufacturer Data Package 5" as specified in Section 01 78 23 OPERATION AND MAINTENANCE DATA. Provide an electronic copy of the OPERATION AND MAINTENANCE (O&M) INSTRUCTIONS

b. Manufacturer's installation and maintenance manuals outlining step-by-step procedures required for system startup, operation, and shutdown. The manual shall include the manufacturer's name, model number, service manual, parts list, and complete description of equipment and their basic operating features.

c. Maintenance manual listing routine maintenance procedures, possible breakdowns and repairs, and troubleshooting guide. The manuals shall include conduit layout, equipment layout and simplified wiring, and control diagrams of the system as installed.

d. The manuals shall include complete procedures for system revision and expansion, detailing both equipment and software requirements.

e. Software delivered for this project shall be provided, on CD or DVD discs.

f. Printouts of configuration settings for all devices.

g. Routine maintenance checklist. The routine maintenance checklist shall be arranged in columnar format. The first column shall list all installed devices, the second column shall state the maintenance activity or state no maintenance required, the third column shall state the frequency of the maintenance activity, and the fourth column for additional comments or reference.

1.8 WARRANTY PERIOD REPAIR SERVICE, MAINTENANCE AND ADJUSTMENTS

During guarantee period, the service technician shall be on-site within 24 hours after notification. All repairs shall be completed within 24 hours of arrival on-site. During the guarantee period, the installing fire alarm contractor is responsible for conducting all required testing and maintenance in accordance with the requirements and recommended practices of NFPA 72 and the system manufacturer. Installing fire alarm contractor is NOT responsible for any damage resulting from abuse, misuse or neglect of equipment by the end user

1.9 EXTRA MATERIALS

1.9.1 Repair Service/Replacement Parts

Repair services and replacement parts for the system shall be available for a period of ten years after the date of final acceptance of this work by the Contracting Officer.

1.9.2 Interchangeable Parts

Spare parts furnished shall be directly interchangeable with the corresponding components of the installed system. Spare parts shall be suitably packaged and identified by nameplate, tagging, or stamping. Spare parts shall be delivered to the Contracting Officer at the time of the final acceptance testing.

1.9.3 Spare Parts

Furnish the following spare parts and accessories:

a. Four fuses for each fused circuit

b. Two multi-spectrum fire/carbon monoxide detectors

1.9.4 Special Tools

Software, connecting cables and proprietary equipment, necessary for the maintenance, testing, and reprogramming of the equipment shall be furnished to the Contracting Officer.

PART 2 PRODUCTS

2.1 MATERIALS AND EQUIPMENT

2.1.1 Manufacturer

Components shall be of current design and shall be in regular and recurrent production at the time of installation. Provide design, materials, and devices for a combination emergency communications system, complete, conforming to NFPA 72, except as otherwise or additionally specified herein.

2.1.2 Standard Products

Provide materials, equipment, and devices that are UL Listed or FM Approved for fire protection service when so required by NFPA 72 or this specification. Select material from one manufacturer, where possible, and

not a combination of manufacturers, for any particular classification of materials. Material and equipment shall be the standard products of a manufacturer regularly engaged in the manufacture of the products for at least two years prior to bid opening.

2.2 GENERAL PRODUCT REQUIREMENT

All combination emergency communications system equipment shall be listed for use under the applicable reference standards.

2.3 WIRING

Provide wiring materials under this section as specified in Section 26 20 00 INTERIOR DISTRIBUTION SYSTEM with the additions and modifications specified herein.

2.3.1 Alarm Wiring

The SLC wiring shall be solid copper cable in accordance with the manufacturers requirements. Copper signaling line circuits and initiating device circuit field wiring shall be No. 14 AWG size conductors at a minimum. Wire size shall be sufficient to prevent excessive voltage drop. Circuits operating at 24 VDC shall not operate at less than 21.6 volts. Circuits operating at any other voltage shall not have a voltage drop exceeding 10 percent of nominal voltage. Power wiring, operating at 120 VAC minimum, shall be a minimum No. 12 AWG solid copper having similar insulation.

2.4 CEILING BRIDGES

Provide ceiling bridges for ceiling-mounted appliances. Ceiling bridges shall be as recommended/required by the manufacturer of the ceiling-mounted notification appliance.

2.5 BACK BOXES AND CONDUIT

In addition to the requirements of SPECIFICATION SECTION 26 20 00 INTERIOR DISTRIBUTION SYSTEM; provide all wiring in rigid metal conduit or intermediate metal conduit unless specifically indicated otherwise. Minimum conduit size shall be 3/4 inch in diameter except for 1/2 inch drops to individual devices. Do not use electrical non-metallic tubing (ENT) or flexible non-metallic tubing and associated fittings.

Provide rigid metal back boxes of adequate size and depth as recommended by the manufacturer of the appliance or device installed.

2.6 ADDRESSABLE MONITOR MODULE

The initiating device being monitored shall be configured as a Class B initiating device circuits. The system shall be capable of defining any module as an alarm module and report alarm, trouble, loss of polling, or as a supervisory module, and reporting supervisory short, supervisory open or loss of polling such as waterflow switches, valve supervisory switches, fire pump monitoring, independent smoke detection systems, relays for output function actuation, and other similar functions. The module shall be UL or FM listed as compatible with the control panel. The monitor module shall provide address setting means compatible with the control

panel's SLC supervision and store an internal identifying code. Monitor module shall contain an integral LED that flashes each time the monitor module is polled. Pull stations with a monitor module in a common backbox are not required to have an LED. LED shall be visible without needing to remove the backbox cover plate.

2.7 ADDRESSABLE CONTROL/RELAY MODULE

The control module shall be capable of operating as a relay (form C contacts) for interfacing the control panel with other systems, and to control door holders or initiate elevator fire service. The module shall be UL or FM listed as compatible with the control panel. The indicating device or the external load being controlled shall be configured as a Class B Pathway. The system shall be capable of supervising, audible, visual and dry contact circuits. The control module shall have both an input and output address. The supervision shall detect a short on the supervised circuit and shall prevent power from being applied to the circuit. Circuit between the module and the equipment/feature controls is permitted be configured as Class D pathways. The pathway is unsupervised but has a fail-safe operation that performs the intended function when the connection is lost.The control model shall provide address setting means compatible with the control panel's SLC supervision and store an internal identifying code. The control module shall contain an integral LED that flashes each time the control module is polled. Control Modules shall be located in environmental areas that reflect the conditions to which they were listed. LED shall be visible without needing to remove the backbox cover plate.

2.8 ISOLATION MODULE

Provide isolation modules to subdivide each Class A signaling line circuit pathway into groups of a maximum of 20 devices but no more than recommended by the equipment manufacturer between adjacent isolation modules. Isolation modules may be modules or combination detector base/isolation module. LED shall be visible without needing to remove the backbox cover plate.

2.9 MULTI CRITERIA FIRE/CARBON MONOXIDE DETECTOR

Provide multi criteria fire/carbon monoxide (CO) detection where required by NFPA 720 and NFPA 72. Detectors shall be listed to Underwriters Laboratories UL 2075 for Gas and Vapor Detectors and Sensors. Detectors shall be addressable, listed for use with, and compatible with existing Johnson Controls Model 3030 fire alarm control unit. Do not provide detectors with local alarms. Detector shall be provided with an LED indicator, LED shall blink green to indicate normal standby, LED shall blink red or turn solid red upon alarm. The CO detectors must be connected directly to SLC of existing fire alarm system.

Provide analog/addressable detectors listed for use with the FACU.

Wiring connections shall be made by means of screw terminals and detectors shall be equipped with trouble relays. Detectors shall be able to mount to a single-gang electrical boxes.

A trouble condition at an individual detector shall not affect any other detectors. Detectors shall be powered by the FACU. Battery powered and 120 VAC powered detectors are prohibited.

Detectors shall be provided with a means to test CO gas entry into the CO sensing cell.

2.9.1 Carbon Monoxide Detector Testing

Carbon monoxide detectors shall be tested in accordance with NFPA 720 and the manufacturer's recommended calibrated test method.

2.10 SYSTEM OPERATION

The combination emergency communications system shall be a complete, supervised, noncoded, analog/addressable fire alarm and mass notification system conforming to NFPA 72, UL 864, and UL 2017. The system shall be activated into the alarm mode by actuation of any fire alarm initiating device. The system shall remain in the alarm mode until the initiating device is reset and the fire alarm control panel is reset and restored to normal. The system may be placed in the alert mode by local microphones or remotely from authorized locations/users.

2.10.1 Fire Alarm and Supervisory Initiating Devices

Connect alarm initiating devices to Class A or Class B signal line circuit (SLC) pathways, and install in accordance with NFPA 72.

The contract required 50 percent spare capacity per SLC limits the design to 25 addresses per Class B SLC.
In accordance with NFPA 72 the number of addresses between isolation modules on a Class A SLC pathway is limited to 50 addresses OR the maximum number of addresses per the manufacturer (most manufacturers limit the number of addresses between isolation modules to 20 addresses.)

a. Given the limitations above, utilizing Class A or Class B signal line circuit pathways is at the discretion of the Fire Alarm Contractor.

b. Any single impairment of the system shall not affect the system on more than one of any floor.

c. The system shall operate in the alarm mode upon activation of any fire alarm initiating device. The system shall remain in alarm mode until initiating device(s) are reset and the fire alarm control panel is manually reset and restored to normal. Audible and visual appliances and systems shall comply with NFPA 72. Fire alarm system/mass notification system components requiring power, except for the control panel power supply, shall operate on 24 VDC.

2.10.2 Functions and Operating Features

The system shall provide the following functions and operating features:

a. The Combination Emergency Communications System Panels (CECP) whether separate or combined Fire Alarm Control Units (FACU) and Autonomous Control Units (ACU), shall provide power, annunciation, supervision, and control for the system. Systems shall be microcomputer (microprocessor or microcontroller) based addressable systems with a minimum word size of eight bits with sufficient memory to perform as specified.

b. Provide Class B initiating device circuit pathways for conductor lengths of 10 feet or less.

c. Provide Class B signaling line circuit pathways

d. Provide Class B control circuits. Class D control circuits are permissible when the the intended operation has fail-safe operation. Fail-safe operation is when the intended operation is performed in the event of a pathway failure.

e. Provide alarm verification capability for smoke detectors. Alarm verification shall initially be set for 20 seconds.

f. Provide program capability via switches in a locked portion of the FACU to bypass the automatic notification appliance circuits, fire reporting system features. Operation of this programming shall indicate this action on the FACU display and system printer output.

g. Alarm, supervisory, and trouble signals shall be automatically transmitted to the fire department .

h. Alarm functions shall override trouble or supervisory functions. Supervisory functions shall override trouble functions.

i. Programmed information shall be stored in non-volatile memory.

j. The system shall be capable of operating, supervising, and/or monitoring both addressable and non-addressable alarm and supervisory devices.

k. There shall be no limit, other than maximum system capacity, as to the number of addressable devices, that may be in alarm simultaneously.

l. Where the fire alarm system is responsible for initiating an action in another emergency control device or system, such as an elevator system, the addressable fire alarm relay shall be within 3 feet of the emergency control device.

m. An alarm signal shall automatically initiate the following functions:

(1) Transmission of an alarm signal to the fire department .

(2) Visual indication of the device operated on the FACU, and on the annunciator. Indication on the annunciator shall be by floor & room number, device address, and device type.

(3) Continuous actuation of all alarm notification appliances.

(4) Recording of the event electronically in the history log of the FACU.

n. A supervisory signal shall automatically initiate the following functions:

(1) Visual indication of the device operated on the FACU, and on the annunciator. Indication on the annunciator shall be by floor & room number, device address, and device type.

(2) Sound the audible alarm at the respective panels.

(3) Transmission of a supervisory signal to the fire department.

(4) Recording of the event electronically in the history log of the FACU.

(5) Supervisory signals shall be non-latching.

o. A trouble condition shall automatically initiate the following functions:

(1) Visual indication of the system trouble on the FACU, and on the annunciator and sound the audible alarm at the respective panels.

(2) Transmission of a trouble signal to the fire department.

(3) Recording of the event electronically in the history log of the fire control system unit.

(4) Trouble conditions shall be non-latching.

p. Activation of a carbon monoxide detector shall automatically initiate the following functions:

(1) Transmission of a carbon monoxide alarm signal to the fire department .

(2) Visual indication of the device operated on the FACU, and on the annunciator. Indication on the annunciator shall be by floor & room number, device address, and device type.

(3) Continuous actuation of all strobes and the audible CO message throughout the building.

(4) Recording of the event electronically in the history log of the FACU.

2.11 ELECTRIC POWER

Primary power to combination emergency communications system panels and equipment

Primary power shall be 120 VAC service for the CECPs and equipment Primary power shall be supplied from the AC service to the building. Provide dedicated branch circuit(s) supplying all CECPs & equipment including but not limited to FACU's, ACU's, supplementary power supplies, SNAC panels, LED message control/interface panels, LED Text signs, etc. Branch circuits shall supply no loads other than those associated with the combination emergency communications system. The circuit disconnecting means and all branch-circuit overcurrent protective devices shall be located within a single panel located in the building's main electrical room. The location of the branch-circuit overcurrent protective device shall be permanently identified at the combination emergency communications system panels/enclosures. The circuit disconnecting means shall have red identification, shall be accessible only to qualified personnel, and shall be identified as "FIRE ALARM CIRCUIT." The red identification shall not damage the overcurrent protective devices or

obscure the manufacturer's markings. This branch circuit shall not be supplied through ground-fault circuit interrupters or arc-fault circuit-interrupters.

Combination emergency communications system panels and equipment(s) includes, but is not limited to; fire alarm control units (FACU),

PART 3 EXECUTION

3.1 SYSTEM FIELD WIRING

3.1.1 Wiring within Cabinets, Enclosures, and Boxes

Provide wiring installed in a neat and workmanlike manner and installed parallel with or at right angles to the sides and back of any box, enclosure, or cabinet. Conductors that are terminated, spliced, or otherwise interrupted in any enclosure, cabinet, mounting, or junction box shall be connected to terminal blocks. Mark each terminal in accordance with the wiring diagrams of the system. Make connections with approved pressure type terminal blocks, that are securely mounted. The use of wire nuts or similar devices shall be prohibited. Wiring shall conform to NFPA 70.

3.1.2 Terminal Cabinets

Provide a terminal cabinet at the base of any circuit riser, on each floor at each riser, and where indicated on the drawings. Terminal size shall be appropriate for the size of the wiring to be connected. Conductor terminations shall be labeled and a drawing containing conductors, their labels, their circuits, and their interconnection shall be permanently mounted in the terminal cabinet. Minimum size is 8 inches by 8 inches. Terminal strips shall be securely mounted inside. Utilizing tape or glue is not an acceptable means of mounting terminal strips.

3.1.3 Conduit

Minimum conduit size shall be 3/4 inch in diameter except for 1/2 inch drops to individual devices. Conceal conduit in finished areas of new construction and wherever practicable in existing construction. Provide an insulated green grounding conductor for all circuit(s) installed in conduit.

a. Galvanized rigid steel (GRS) conduit shall be utilized. Intermediate Metal Conduit (IMC). IMC may be used in lieu of GRS as allowed by NFPA 70.

b. Flexible metal conduit is permitted for initiating device circuits 6 ft length in length or less. Flexible metal conduit is prohibited for notification applaince circuits and siganling line circuits. Use liquidtight flexible metal conduit in damp and wet locations.

3.1.4 Wire

Voltages shall not be mixed in any junction box, housing, or device, except those containing power supplies and control relays. Shielded wiring shall be utilized where recommended by the manufacturer. For shielded wiring, the shield shall be grounded at only one point, that shall be in or adjacent to the FACU. Pigtail or T-tap connections to

signal line circuits, initiating device circuits, supervisory alarm circuits, and notification appliance circuits are prohibited. Pull all conductors splice free. Color coding is required for circuits and shall be maintained throughout the circuit. Conductors used for the same functions shall be similarly color coded. Wiring shall conform to NFPA 70.

3.1.5 Conductor Terminations

Label all conductor terminations in panels and equipment associated with the combination emergency communications system (FACU, ACU, LOC, Amplifiers, SNAC & Auxiliary power supply panels, MNS transmitter and Fire alarm transmitter) Each conductor or cable shall have a shrink-wrap label to provide a unique and specific designation. Each combination emergency communications system cabinet and panel shall contain a laminated drawing that indicates each conductor, its label, circuit, and terminal. The laminated drawing shall be neat, using 12 point lettering minimum size, and mounted within each cabinet, panel, or unit so that it does not interfere with the wiring or terminals. Maintain existing color code scheme where connecting to existing equipment.

3.2 CONNECTION OF NEW SYSTEM

The following new system connections shall be made during the last phase of construction, at the beginning of the preliminary tests. New system connections shall include:

a. Connection of new detectors to existing SLC.

b. Reprogramming of existing Johnson Controls Model 3030 control unit as necessary to monitor and control new devices, and transmit of new signals to base dispatch center.

c. Reprogramming of base Fire Alarm Reporting System (FARS) equipment at dispatch center as necessary to transmit and recieve all required signals of new CO detectors in accordance with NFPA 72 and NFPA 720.

Once these connections are made, system shall be left energized. Report immediately to the Contracting Officer any coordination and field problems resulting from the connection of the above components.

3.3 FIRESTOPPING

Provide firestopping for conduit penetrations through fire rated floor slabs, walls, partitions, and shaft enclosures in accordance with Section 07 84 00 FIRESTOPPING.

3.4 PAINTING

Paint surface metal raceways red in unfinished areas. Painting shall comply with Section 09 90 00 PAINTS AND COATINGS.

In unfinished areas, paint all fire alarm conduit, junction boxes and covers red. In lieu of painting conduit, the contractor may utilize red conduit with a factory applied finish.

In finished areas, paint exposed fire alarm conduit, surface metal raceways, junction boxes, and electrical boxes to match adjacent finishes. The inside cover of the junction box must be identified as "Fire Alarm" and the conduit must have painted red bands 3/4 inch wide at

10 foot centers and at each side of a floor, wall, or ceiling penetration.

3.5 FIELD QUALITY CONTROL

3.5.1 Testing Procedures

Submit detailed test procedures prepared and signed by a registered professional engineer (P.E.) who has passed the fire protection engineering written examination administered by the National Council of Examiners for Engineering and Surveys (NCEES).Registered Professional Engineer or a NICET Level 4 Fire Alarm Technician, and signed by representative of the installing company, for the fire detection and alarm system 60 days prior to performing system tests. Detailed test procedures shall list all components of the installed system such as initiating devices and circuits, notification appliances and circuits, signaling line devices and circuits, control devices/equipment, batteries, transmitting and receiving equipment, power sources/supply, annunciators, special hazard equipment, emergency communication equipment, interface equipment, and transient (surge) suppressors. Test procedures shall include sequence of testing, time estimate for each test, and sample test data forms. The test data forms shall be in a check-off format (pass/fail with space to add applicable test data) and shall be used for the preliminary testing and the acceptance testing. The test data forms shall record the test results and shall:

a. Identify the NFPA Class of pathways for all Initiating Device Circuits (IDC), Notification Appliance Circuits (NAC), Voice Notification System, and Signaling Line Circuits (SLC).

b. Identify each test required by NFPA 72 Test Methods and required test herein to be performed on each component, and describe how this test shall be performed.

c. Identify each component and circuit as to type, location within the facility, and unique identity within the installed system. Provide necessary floor plan sheets showing each component location, test location, and alphanumeric identity.

d. Identify all test equipment and personnel required to perform each test (including equipment necessary for testing smoke detectors using real smoke).

e. Provide space to identify the date and time of each test.

f. Provide space to identify the names and signatures of the individuals conducting and witnessing each test.

3.5.2 Tests Stages

a. Preliminary Testing: Conduct preliminary tests to ensure devices and circuits are functioning properly. Tests shall meet the requirements of paragraph entitled "Minimum System Tests." After preliminary testing is complete, provide a letter certifying the installation is complete and fully operable. The letter shall state each initiating and indicating device was tested in place and functioned properly. The letter shall also state that panel functions were tested and operated properly. The letter shall include the names and titles of the witnesses to the preliminary tests. The Contractor and an authorized representative from each supplier of equipment shall

be in attendance at the preliminary testing to make necessary adjustments.

b. Request for Formal Inspection and Tests: Requests for Formal Inspection and Tests shall not be submitted until after the connections to the installation-wide fire reporting system and the installation-wide mass notification system have been completed and fully functional When preliminary tests have been completed and corrections made, submit a signed, dated certificate with a request for formal inspection and tests to the Naval Facilities Engineering Command, , Fire Protection Engineer.

c. Final Testing: Notify the Contracting Officer in writing when the system is ready for final acceptance testing. Submit request for test at least 15 calendar days prior to the test date. The tests shall be performed in accordance with the approved test procedures in the presence of the Contracting Officer. Furnish instruments and personnel required for the tests. A final acceptance test will not be scheduled until the operation and maintenance (O&M) manuals are furnished to the Contracting Officer and the following are provided at the project site:

(1) The systems manufacturer's technical representative

(2) As-built (red-lined) drawings of the system as actually installed

(3) Megger test results

(4) Loop resistance test results

(5) Complete program printout including input/output addresses

The final tests shall be witnessed by the NAVFAC MIDLANT Fire Protection Engineer. At this time, any and all required tests shall be repeated at their discretion. Following acceptance of the system, as-built drawings and O&M manuals shall be delivered to the Contracting Officer for review and acceptance.

3.5.3 Minimum System Tests

Test the system in accordance with the procedures outlined in NFPA 72, ISO 7240-16, IEC 60268-16. The required tests are as follows:

Demonstrate communications with the supervising station as specified by the Contracting Officer. As a minimum, verify all points are correctly received at the supervising station receiver and automated software system.

Demonstrate communications with the installation-wide mass notification system as specified by the Contracting Officer.

a. Megger Tests: After wiring has been installed, and prior to making any connections to panels or devices, wiring shall be megger tested for insulation resistance, grounds, and/or shorts. Conductors with 300 volt rated insulation shall be tested at a minimum of 250 VDC. Conductors with 600 volt rated insulation shall be tested at a minimum of 500 VDC. The tests shall be witnessed by the Contracting Officer and test results recorded for use at the final acceptance test.

b. Loop Resistance Tests: Measure and record the resistance of each circuit with each pair of conductors in the circuit short-circuited at the farthest point from the circuit origin. The tests shall be witnessed by the Contracting Officer and test results recorded for use at the final acceptance test.

c. Verify the absence of unwanted voltages between circuit conductors and ground. The tests shall be accomplished at the preliminary test with results available at the final system test.

d. Verify that the control unit is in the normal condition as detailed in the manufacturer's O&M manual.

e. Test each initiating and indicating device and circuit for proper operation and response at the control unit. Smoke detectors shall be tested in accordance with manufacturer's recommended calibrated test method. Use of magnets is prohibited. Testing of duct smoke detectors shall comply with the requirements of NFPA 72.

f. Test the system for specified functions in accordance with the contract drawings and specifications and the manufacturer's O&M manual.

g. Test both primary power and secondary power. Verify, by test, the secondary power system is capable of operating the system for the time period and in the manner specified.

h. Determine that the system is operable under trouble conditions as specified.

i. Visually inspect wiring.

j. Test the battery charger and batteries.

k. Verify that software control and data files have been entered or programmed into the FACU. Hard copy records of the software shall be provided to the Contracting Officer.

l. Verify that red-line drawings are accurate.

m. Measure the current in circuits to ensure there is the calculated spare capacity for the circuits.

n. Measure voltage readings for circuits to ensure that voltage drop is not excessive.

o. Disconnect the verification feature for smoke detectors during tests to minimize the amount of smoke needed to activate the detector. Testing of smoke detectors shall be conducted using real smoke. The use of canned smoke is prohibited.

p. Measure the voltage drop at the most remote appliance (based on wire length) on each notification appliance circuit.

q. Audibility Intelligibility testing of the Voice Evacuation Notification System shall be accomplished in accordance with NFPA 72 for Voice Evacuation Systems, IEC 60268-16, and ASA S3.2.

r. Opening the circuit at not less than 25% of alarm initiating

devices and notification appliances to test the wiring supervisory feature.

s. Demonstrate modem communications with remote sites as specified by the Contracting Officer. Dial in capability shall also, be demonstrated, using specified security.

t. Dial in capability shall also, be demonstrated, using specified security.

3.6 INSTRUCTION OF GOVERNMENT EMPLOYEES

Provide 2 days (16 hours) of onsite instruction after final acceptance of the system. The instruction shall be given during regular working hours on such dates and times as are selected by the Contracting Officer. The instruction may be divided into two or more periods at the discretion of the Contracting Officer. The training shall allow for rescheduling for unforeseen maintenance and/or fire department responses.

3.6.1 Instructor

Include in the project the services of an instructor, who has received specific training from the manufacturer for the training of other persons regarding the inspection, testing, and maintenance of the system provided. The instructor shall train the Government employees designated by the Contracting Officer, in the care, adjustment, maintenance, and operation of the fire alarm and CO detection system. Each instructor shall be thoroughly familiar with all parts of this installation. The instructor shall be trained in operating theory as well as in practical O&M work.

3.6.2 Required Instruction Time

Provide 2 days (16 hours) of onsite instruction after final acceptance of the system. The instruction shall be given during regular working hours on such dates and times as are selected by the Contracting Officer. The instruction may be divided into two or more periods at the discretion of the Contracting Officer. The training shall allow for rescheduling for unforeseen maintenance and/or fire department responses.

Provide 5 days of technical training for three Government employees at the manufacturing facility. Training shall allow for classroom instruction as well as individual hands on programming, troubleshooting and diagnostics exercises. Room and board costs shall be included for three Government personnel. Factory training shall occur within 6 months of system acceptance.

3.6.3 Technical Data and Computer Software

Provide, in manual format, lesson plans, operating instructions, maintenance procedures, and training data for the training courses. The operations training shall familiarize designated government personnel with proper operation of the installed system. The maintenance training course shall provide the designated government personnel adequate knowledge required to diagnose, repair, maintain, and expand functions inherent to the system.

Any proprietary equipment and proprietary software needed by qualified technicians to implement future changes to the fire alarm system shall be

provided as part of this contract. Maintenance software required and provided as part of this contract shall not require any type of annual license agreement or annual cost to continue use of the software. The software that is provided will continue to operate during the entire lifetime of the installed equipment without any additional cost to the Government.

-- End of Section --

THIS PAGE HAS BEEN INTENTIONALLY LEFT BLANK

SECTION 31 32 11

SOIL SURFACE EROSION CONTROL

08/08

PART 1 GENERAL

1.1 SUMMARY

The work consists of furnishing and installing temporary and permanent soil surface erosion control materials to prevent the pollution of air, water, and land, including fine grading, blanketing, stapling, mulching, vegetative measures, structural measures, and miscellaneous related work, within project limits and in areas outside the project limits where the soil surface is disturbed from work under this contract at the designated locations. This work includes all necessary materials, labor, supervision and equipment for installation of a complete system. Submit a listing of equipment to be used for the application of erosion control materials. Coordinate this section with the requirements of Section 32 92 23 SODDING. Complete backfilling the openings in synthetic grid systems and articulating cellular concrete block systems a maximum 7 days after placement to protect the material from ultraviolet radiation.

1.2 REFERENCES

The publications listed below form a part of this specification to the extent referenced. The publications are referred to within the text by the basic designation only.

ASTM INTERNATIONAL (ASTM)

ASTM D1248	(2012) Standard Specification for Polyethylene Plastics Extrusion Materials for Wire and Cable
ASTM D1777	(1996; E 2011; R 2011) Thickness of Textile Materials
ASTM D3776/D3776M	(2009a; R 2013) Standard Test Method for Mass Per Unit Area (Weight) of Fabric
ASTM D3787	(2007; R 2011) Bursting Strength of Textiles - Constant-Rate-of-Traverse (CRT), Ball Burst Test
ASTM D3884	(2009; R 2013; E 2014) Abrasion Resistance of Textile Fabrics (Rotary Platform, Double-Head Method)
ASTM D4355/D4355M	(2014) Deterioration of Geotextiles from Exposure to Light, Moisture and Heat in a Xenon-Arc Type Apparatus
ASTM D4491/D4491M	(2015) Standard Test Methods for Water Permeability of Geotextiles by Permittivity

ASTM D4533/D4533M	(2015) Standard Test Method for Trapezoid Tearing Strength of Geotextiles
ASTM D4632/D4632M	(2015a) Grab Breaking Load and Elongation of Geotextiles
ASTM D4751	(2012) Determining Apparent Opening Size of a Geotextile
ASTM D4833/D4833M	(2007; E 2013; R 2013) Index Puncture Resistance of Geotextiles, Geomembranes, and Related Products
ASTM D4972	(2013) pH of Soils
ASTM D5268	(2013) Topsoil Used for Landscaping Purposes
ASTM D648	(2007) Deflection Temperature of Plastics Under Flexural Load in the Edgewise Position

1.3 SUBMITTALS

Government approval is required for submittals with a "G" designation; submittals not having a "G" designation are for Contractor Quality Control approval. Submit the following in accordance with Section 01 33 00 SUBMITTAL PROCEDURES:

SD-03 Product Data

Geotextile Fabrics; G

Submit manufacturer's literature including physical characteristics, application and installation instructions. Documentation indicating percentage of post-industrial and post-consumer recycled content per unit of product. Indicate relative dollar value of recycled content products to total dollar value of products included in project.

SD-06 Test Reports

Geotextile Fabrics

SD-07 Certificates

Geotextile Fabrics

1.4 QUALITY ASSURANCE

1.4.1 Installer's Qualification

The installer shall be certified by the manufacturer for training and experience installing the material. Submit the installer's company name and address, and/or certification.

1.4.2 Substitutions

Substitutions will not be allowed without written request and approval from the Contracting Officer.

1.5 DELIVERY, STORAGE, AND HANDLING

Prior to delivery of materials, submit certificates of compliance attesting that materials meet the specified requirements. Store materials in designated areas and as recommended by the manufacturer protected from the elements, direct exposure, and damage. Do not drop containers from trucks. Material shall be free of defects that would void required performance or warranty.

1.6 SCHEDULING

Submit a construction work sequence schedule, with the approved erosion control plan a minimum of 30 days prior to start of construction. The work schedule shall coordinate the timing of land disturbing activities with the provision of erosion control measures to reduce on-site erosion and off-site sedimentation. Coordinate installation of temporary erosion control features with the construction of permanent erosion control features to assure effective and continuous control of erosion, pollution, and sediment deposition. Include a vegetative plan with planting and seeding dates and fertilizer, lime, and mulching rates. Distribute copies of the work schedule and erosion control plan to site subcontractors. Address the following in the erosion control plan:

a. Statement of erosion control objectives.

b. Description of temporary and permanent erosion control and air pollution control measures to be implemented on site.

c. Description of the type and frequency of maintenance activities required for the chosen erosion control methods.

1.7 WARRANTY

Erosion control material shall have a warranty for use and durable condition for project specific installations. Temporary erosion control materials shall carry a minimum eighteen month warranty.

PART 2 PRODUCTS

2.1 RECYCLED PLASTIC

Submit individual component and assembled unit structural integrity test results; creep tolerance; deflection tolerance; and vertical load test results and Life-cycle durability. Recycled plastic shall contain a minimum 85 percent of recycled post-consumer product. Recycled material shall be constructed or manufactured with a maximum 1/4 inch deflection or creep in any member, according to ASTM D648 and ASTM D1248. The components shall be molded of ultraviolet (UV) and color stabilized polyethylene. The material shall consist of a minimum 75 percent plastic profile of high-density polyethylene, low-density polyethylene, and polypropylene raw material. The material shall be non-toxic and have no

discernible contaminates such as paper, foil, or wood. The material shall contain a maximum 3 percent air voids and shall be free of splinters, chips, peels, buckling, and cracks. Material shall be resistant to deformation from solar heat gain.

2.2 MULCH CONTROL

2.2.1 Mulch Control Netting and Filter Fabric

Mulch control netting and filter fabric may be constructed of lightweight recycled plastic, cotton, or paper or organic fiber. The recycled plastic shall be a woven or nonwoven polypropylene, nylon, or polyester containing stabilizers and/or inhibitors to make the fabric resistant to deterioration from UV, and with the following properties:

Minimum grab tensile strength (TF 25 #1/ ASTM D4632/D4632M)	180 pounds
Minimum Puncture (TF 25 #4/ASTM D3787)	75 psi in the weakest direction
Apparent opening sieve size	minimum 40 and maximum 80 (U.S. Sieve Size)
Minimum Trapezoidal tear strength (TF 25 #2/ASTM D4533/D4533M)	50 pounds

2.3 GEOTEXTILE FABRICS

Geotextile fabrics shall be woven of polypropylene filaments formed into a stable network so that the filaments retain their relative position to each other. Sewn seams shall have strength equal to or greater than the geotextile itself. Install fabric to withstand maximum velocity flows as recommended by the manufacturer. The geotextile shall conform to the following minimum average roll values:

Property	Performance	Test Method
Weight	264 g/m^2	ASTM D3776/D3776M
Thickness	0.635 mm	ASTM D1777
Permeability	0.12 cm/sec	ASTM D4491/D4491M
Abrasion Resistance, Type (percent strength retained)	58 percent X 81 percent	ASTM D3884
Tensile Grab Strength	1467 N X 1933 N	ASTM D4632/D4632M
Grab Elongation	15 percent X 20 percent	ASTM D4632/D4632M
Burst Strength	5510 kN/m^2	ASTM D3787
Puncture Strength	733 N	ASTM D4833/D4833M
Trapezoid Tear	533 N X 533 N	ASTM D4533/D4533M
Apparent Opening Size	40 US Std Sieve	ASTM D4751

Property	Performance	Test Method
UV Resistance @ 500 hours	90 percent	ASTM D4355/D4355M

2.4 WATER

Unless otherwise directed, water is the responsibility of the Contractor. Water shall be potable or supplied by an existing irrigation system.

PART 3 EXECUTION

3.1 WEATHER CONDITIONS

Perform erosion control operations under favorable weather conditions; when excessive moisture, frozen ground or other unsatisfactory conditions prevail, the work shall be stopped as directed. When special conditions warrant a variance to earthwork operations, submit a revised construction schedule for approval. Do not apply erosion control materials in adverse weather conditions which could affect their performance.

3.1.1 Finished Grade

Provide condition of finish grade status prior to installation, location of underground utilities and facilities. Verify that finished grades are as indicated on the drawings. Verify and mark the location of underground utilities and facilities in the area of the work. Repair damage to underground utilities and facilities at the Contractor's expense.

3.2 SITE PREPARATION

3.2.1 Soil Test

Test soil in accordance with ASTM D5268 and ASTM D4972 for determining the particle size and mechanical analysis. Sample collection onsite shall be random over the entire site. The test shall determine the soil particle size as compatible for the specified material.

3.2.2 Layout

Submit scale drawings defining areas to receive recommended materials as required by federal, state or local regulations. Erosion control material locations may be adjusted to meet field conditions. When soil tests result in unacceptable particle sizes, submit a shop drawing indicating the corrective measures.

3.2.3 Protecting Existing Vegetation

When there are established lawns in the work area, the turf shall be covered and/or protected or replaced after construction operations. Identify existing trees, shrubs, plant beds, and landscape features that are to be preserved on site by appropriate tags and barricade with reusable, high-visibility fencing along the dripline. Mitigate damage to existing trees at no additional cost to the Government. Damage shall be assessed by a state certified arborist or other approved professional using the National Arborist Association's tree valuation guideline.

3.2.4 Obstructions Below Ground

When obstructions below ground affect the work, submit shop drawings showing proposed adjustments to placement of erosion control material for approval.

3.3 INSTALLATION

Immediately stabilize exposed soil using fabric, and seed. Stabilize areas for construction access immediately as specified in the paragraph Construction Entrance. Install principal sediment basins and traps before any major site grading takes place. Provide additional sediment traps and sediment fences as grading progresses. Provide inlet and outlet protection at the ends of new drainage systems. Remove temporary erosion control measures at the end of construction and provide permanent seeding.

3.3.1 Mulch Control Netting

Netting may be stapled over mulch according to manufacturer's recommendations.

3.3.2 Sediment Fencing

Install posts at the spacing indicated on drawings and at an angle between 2 degrees and 20 degrees towards the potential silt load area. Sediment fence height shall be approximately 16 inches. Do not attach filter fabric to existing trees. Secure filter fabric to the post and wire fabric using staples, tie wire, or hog rings. Imbed the filter fabric into the ground as indicated on drawings. Splice filter fabric at support pole using a 6 inches overlap and securely seal.

3.4 CLEAN-UP

Dispose of excess material, debris, and waste materials offsite at an approved landfill or recycling center. Clear adjacent paved areas. Immediately upon completion of the installation in an area, protect the area against traffic or other use by erecting barricades and providing signage as required, or as directed.

3.5 MAINTENANCE RECORD

Furnish a record describing the maintenance work performed, record of measurements and findings for product failure, recommendations for repair, and products replaced.

3.5.1 Maintenance

Maintenance shall include eradicating weeds; protecting embankments and ditches from surface erosion; maintaining the performance of the erosion control materials and mulch; protecting installed areas from traffic.

3.5.2 Maintenance Instructions

Furnish written instructions containing drawings and other necessary information, describing the care of the installed material; including, when and where maintenance should occur, and the procedures for material replacement. Submit instruction for year-round care of installed material. Include manufacturer supplied spare parts.

3.5.3 Patching and Replacement

Unless otherwise directed, material shall be placed, seamed or patched as recommended by the manufacturer. Remove material not meeting the required performance as a result of placement, seaming or patching from the site. Replace the unacceptable material at no additional cost to the Government.

-- End of Section --

THIS PAGE HAS BEEN INTENTIONALLY LEFT BLANK

SECTION 32 16 13

CONCRETE SIDEWALKS AND CURBS AND GUTTERS
04/08

PART 1 GENERAL

1.1 MEASUREMENT FOR PAYMENT

This Section specifies only the required concrete sidewalks.

1.1.1 Sidewalks

The quantities of sidewalks to be paid for will be the number of square yards of each depth of sidewalk constructed as indicated.

1.2 BASIS FOR PAYMENT

1.2.1 Sidewalks

Payment of the quantities of sidewalks measured as specified will be at the contract unit price per squareyard of the thickness specified.

1.3 REFERENCES

The publications listed below form a part of this specification to the extent referenced. The publications are referred to within the text by the basic designation only.

AMERICAN ASSOCIATION OF STATE HIGHWAY AND TRANSPORTATION OFFICIALS (AASHTO)

AASHTO M 182	(2005; R 2012) Standard Specification for Burlap Cloth Made from Jute or Kenaf and Cotton Mats

ASTM INTERNATIONAL (ASTM)

ASTM A1064/A1064M	(2015) Standard Specification for Carbon-Steel Wire and Welded Wire Reinforcement, Plain and Deformed, for Concrete
ASTM A615/A615M	(2015a; E 2015) Standard Specification for Deformed and Plain Carbon-Steel Bars for Concrete Reinforcement
ASTM C143/C143M	(2012) Standard Test Method for Slump of Hydraulic-Cement Concrete
ASTM C171	(2007) Standard Specification for Sheet Materials for Curing Concrete
ASTM C172/C172M	(2014a) Standard Practice for Sampling Freshly Mixed Concrete
ASTM C173/C173M	(2014) Standard Test Method for Air

	Content of Freshly Mixed Concrete by the Volumetric Method
ASTM C231/C231M	(2014) Standard Test Method for Air Content of Freshly Mixed Concrete by the Pressure Method
ASTM C309	(2011) Standard Specification for Liquid Membrane-Forming Compounds for Curing Concrete
ASTM C31/C31M	(2012) Standard Practice for Making and Curing Concrete Test Specimens in the Field
ASTM C920	(2014a) Standard Specification for Elastomeric Joint Sealants
ASTM D1751	(2004; E 2013; R 2013) Standard Specification for Preformed Expansion Joint Filler for Concrete Paving and Structural Construction (Nonextruding and Resilient Bituminous Types)
ASTM D1752	(2004a; R 2013) Standard Specification for Preformed Sponge Rubber Cork and Recycled PVC Expansion
ASTM D5893/D5893M	(2010) Cold Applied, Single Component, Chemically Curing Silicone Joint Sealant for Portland Cement Concrete Pavements

1.4 SYSTEM DESCRIPTION

1.4.1 General Requirements

Provide plant, equipment, machines, and tools used in the work subject to approval and maintained in a satisfactory working condition at all times. The equipment shall have the capability of producing the required product, meeting grade controls, thickness control and smoothness requirements as specified. Use of the equipment shall be discontinued if it produces unsatisfactory results. The Contracting Officer shall have access at all times to the plant and equipment to ensure proper operation and compliance with specifications.

1.5 SUBMITTALS

Government approval is required for submittals with a "G" designation; submittals not having a "G" designation are for Contractor Quality Control approval. Submit the following in accordance with Section 01 33 00 SUBMITTAL PROCEDURES:

SD-03 Product Data

Concrete; G

SD-06 Test Reports

Field Quality Control; G

1.6 ENVIRONMENTAL REQUIREMENTS

1.6.1 Placing During Cold Weather

Do not place concrete when the air temperature reaches 40 degrees F and is falling, or is already below that point. Placement may begin when the air temperature reaches 35 degrees F and is rising, or is already above 40 degrees F. Make provisions to protect the concrete from freezing during the specified curing period. If necessary to place concrete when the temperature of the air, aggregates, or water is below 35 degrees F, placement and protection shall be approved in writing. Approval will be contingent upon full conformance with the following provisions. The underlying material shall be prepared and protected so that it is entirely free of frost when the concrete is deposited. Mixing water and aggregates shall be heated as necessary to result in the temperature of the in-place concrete being between 50 and 85 degrees F. Methods and equipment for heating shall be approved. The aggregates shall be free of ice, snow, and frozen lumps before entering the mixer. Covering and other means shall be provided for maintaining the concrete at a temperature of at least 50 degrees F for not less than 72 hours after placing, and at a temperature above freezing for the remainder of the curing period.

1.6.2 Placing During Warm Weather

The temperature of the concrete as placed shall not exceed85 degrees F except where an approved retarder is used. The mixing water and/or aggregates shall be cooled, if necessary, to maintain a satisfactory placing temperature. The placing temperature shall not exceed95 degrees F at any time.

PART 2 PRODUCTS

2.1 CONCRETE

Provide concrete conforming to the applicable requirements of Section 03 30 00 CAST-IN-PLACE CONCRETE except as otherwise specified. Concrete shall have a minimum compressive strength of 3500 psi at 28 days. Maximum size of aggregate shall be 1-1/2 inches. Submit copies of certified delivery tickets for all concrete used in the construction.

2.1.1 Air Content

Mixtures shall have air content by volume of concrete of 5 to 7 percent, based on measurements made immediately after discharge from the mixer.

2.1.2 Slump

The concrete slump shall be 2 inches plus or minus 1 inch where determined in accordance with ASTM C143/C143M.

2.1.3 Reinforcement Steel

Reinforcement bars shall conform to ASTM A615/A615M. Wire mesh reinforcement shall conform to ASTM A1064/A1064M.

2.2 CONCRETE CURING MATERIALS

2.2.1 Impervious Sheet Materials

Impervious sheet materials shall conform to ASTM C171, type optional, except that polyethylene film, if used, shall be white opaque.

2.2.2 Burlap

Burlap shall conform to AASHTO M 182.

2.2.3 White Pigmented Membrane-Forming Curing Compound

White pigmented membrane-forming curing compound shall conform to ASTM C309, Type 2.

2.3 CONCRETE PROTECTION MATERIALS

Concrete protection materials shall be a linseed oil mixture of equal parts, by volume, of linseed oil and either mineral spirits, naphtha, or turpentine. At the option of the Contractor, commercially prepared linseed oil mixtures, formulated specifically for application to concrete to provide protection against the action of deicing chemicals may be used, except that emulsified mixtures are not acceptable.

2.4 JOINT FILLER STRIPS

2.4.1 Expansion Joint Filler, Premolded

Expansion joint filler, premolded, shall conform to ASTM D1751 or ASTM D1752, 1/2 inch thick, unless otherwise indicated.

2.5 JOINT SEALANTS

Joint sealant, cold-applied shall conform to ASTM C920 or ASTM D5893/D5893M.

2.6 FORM WORK

Design and construct form work to ensure that the finished concrete will conform accurately to the indicated dimensions, lines, and elevations, and within the tolerances specified. Forms shall be of wood or steel, straight, of sufficient strength to resist springing during depositing and consolidating concrete. Wood forms shall be surfaced plank, 2 inches nominal thickness, straight and free from warp, twist, loose knots, splits or other defects. Wood forms shall have a nominal length of 10 feet. Radius bends may be formed with 3/4 inch boards, laminated to the required thickness. Steel forms shall be channel-formed sections with a flat top surface and with welded braces at each end and at not less than two intermediate points. Ends of steel forms shall be interlocking and self-aligning. Steel forms shall include flexible forms for radius forming, corner forms, form spreaders, and fillers. Steel forms shall have a nominal length of 10 feet with a minimum of 3 welded stake pockets per form. Stake pins shall be solid steel rods with chamfered heads and pointed tips designed for use with steel forms.

2.6.1 Sidewalk Forms

Sidewalk forms shall be of a height equal to the full depth of the finished sidewalk.

PART 3 EXECUTION

3.1 FORM SETTING

Set forms to the indicated alignment, grade and dimensions. Hold forms rigidly in place by a minimum of 3 stakes per form placed at intervals not to exceed 4 feet. Corners, deep sections, and radius bends shall have additional stakes and braces, as required. Clamps, spreaders, and braces shall be used where required to ensure rigidity in the forms. Forms shall be removed without injuring the concrete. Bars or heavy tools shall not be used against the concrete in removing the forms. Any concrete found defective after form removal shall be promptly and satisfactorily repaired. Forms shall be cleaned and coated with form oil each time before concrete is placed. Wood forms may, instead, be thoroughly wetted with water before concrete is placed, except that with probable freezing temperatures, oiling is mandatory.

3.1.1 Sidewalks

Set forms for sidewalks with the upper edge true to line and grade with an allowable tolerance of 1/8 inch in any 10 foot long section. After forms are set, grade and alignment shall be checked with a 10 foot straightedge. Forms shall have a transverse slope of 1/4 inch per foot with the low side adjacent to the roadway. Side forms shall not be removed for 12 hours after finishing has been completed.

3.2 SIDEWALK CONCRETE PLACEMENT AND FINISHING

3.2.1 Formed Sidewalks

Place concrete in the forms in one layer. When consolidated and finished, the sidewalks shall be of the thickness indicated. After concrete has been placed in the forms, a strike-off guided by side forms shall be used to bring the surface to proper section to be compacted. The concrete shall be consolidated by tamping and spading or with an approved vibrator, and the surface shall be finished to grade with a strike off.

3.2.2 Concrete Finishing

After straightedging, when most of the water sheen has disappeared, and just before the concrete hardens, finish the surface with a wood or magnesium float or darby to a smooth and uniformly fine granular or sandy texture free of waves, irregularities, or tool marks. A scored surface shall be produced by brooming with a fiber-bristle brush in a direction transverse to that of the traffic, followed by edging.

3.2.3 Edge and Joint Finishing

All slab edges, including those at formed joints, shall be finished with an edger having a radius of 1/8 inch. Transverse joint shall be edged before brooming, and the brooming shall eliminate the flat surface left by the surface face of the edger. Corners and edges which have crumbled and areas which lack sufficient mortar for proper finishing shall be cleaned and filled solidly with a properly proportioned mortar mixture and then finished.

3.2.4 Surface and Thickness Tolerances

Finished surfaces shall not vary more than 5/16 inch from the testing edge of a 10-foot straightedge. Permissible deficiency in section thickness will be up to 1/4 inch.

3.3 SIDEWALK JOINTS

Sidewalk joints shall be constructed to divide the surface into rectangular areas. Transverse contraction joints shall be spaced at a distance equal to the sidewalk width or 5 feet on centers, whichever is less, and shall be continuous across the slab. Longitudinal contraction joints shall be constructed along the centerline of all sidewalks 10 feet or more in width. Transverse expansion joints shall be installed at sidewalk returns and opposite expansion joints in adjoining curbs. Where the sidewalk is not in contact with the curb, transverse expansion joints shall be installed as indicated. Expansion joints shall be formed about structures and features which project through or into the sidewalk pavement, using joint filler of the type, thickness, and width indicated. Expansion joints are not required between sidewalks and curb that abut the sidewalk longitudinally.

3.3.1 Sidewalk Contraction Joints

The contraction joints shall be formed in the fresh concrete by cutting a groove in the top portion of the slab to a depth of at least one-fourth of the sidewalk slab thickness, using a jointer to cut the groove, or by sawing a groove in the hardened concrete with a power-driven saw, unless otherwise approved. Sawed joints shall be constructed by sawing a groove in the concrete with a 1/8 inch blade to the depth indicated. An ample supply of saw blades shall be available on the job before concrete placement is started, and at least one standby sawing unit in good working order shall be available at the jobsite at all times during the sawing operations.

3.3.2 Sidewalk Expansion Joints

Expansion joints shall be formed with 1/2 inch joint filler strips. Joint filler in expansion joints surrounding structures and features within the sidewalk may consist of preformed filler material conforming to ASTM D1752 or building paper. Joint filler shall be held in place with steel pins or other devices to prevent warping of the filler during floating and finishing. Immediately after finishing operations are completed, joint edges shall be rounded with an edging tool having a radius of 1/8 inch, and concrete over the joint filler shall be removed. At the end of the curing period, expansion joints shall be cleaned and filled with cold-applied joint sealant. Joint sealant shall be gray or stone in color. The joint opening shall be thoroughly cleaned before the sealing material is placed. Sealing material shall not be spilled on exposed surfaces of the concrete. Concrete at the joint shall be surface dry and atmospheric and concrete temperatures shall be above 50 degrees F at the time of application of joint sealing material. Excess material on exposed surfaces of the concrete shall be removed immediately and concrete surfaces cleaned.

3.3.3 Reinforcement Steel Placement

Reinforcement steel shall be accurately and securely fastened in place with suitable supports and ties before the concrete is placed.

3.4 CURING AND PROTECTION

3.4.1 General Requirements

Protect concrete against loss of moisture and rapid temperature changes for at least 7 days from the beginning of the curing operation. Protect unhardened concrete from rain and flowing water. All equipment needed for adequate curing and protection of the concrete shall be on hand and ready for use before actual concrete placement begins. Protection shall be provided as necessary to prevent cracking of the pavement due to temperature changes during the curing period.

3.4.1.1 Mat Method

The entire exposed surface shall be covered with 2 or more layers of burlap. Mats shall overlap each other at least 6 inches. The mat shall be thoroughly wetted with water prior to placing on concrete surface and shall be kept continuously in a saturated condition and in intimate contact with concrete for not less than 7 days.

3.4.1.2 Impervious Sheeting Method

The entire exposed surface shall be wetted with a fine spray of water and then covered with impervious sheeting material. Sheets shall be laid directly on the concrete surface with the light-colored side up and overlapped 12 inches when a continuous sheet is not used. The curing medium shall not be less than 18-inches wider than the concrete surface to be cured, and shall be securely weighted down by heavy wood planks, or a bank of moist earth placed along edges and laps in the sheets. Sheets shall be satisfactorily repaired or replaced if torn or otherwise damaged during curing. The curing medium shall remain on the concrete surface to be cured for not less than 7 days.

3.4.1.3 Membrane Curing Method

A uniform coating of white-pigmented membrane-curing compound shall be applied to the entire exposed surface of the concrete as soon after finishing as the free water has disappeared from the finished surface. Formed surfaces shall be coated immediately after the forms are removed and in no case longer than 1 hour after the removal of forms. Concrete shall not be allowed to dry before the application of the membrane. If any drying has occurred, the surface of the concrete shall be moistened with a fine spray of water and the curing compound applied as soon as the free water disappears. Curing compound shall be applied in two coats by hand-operated pressure sprayers at a coverage of approximately 200 square feet/gallon for the total of both coats. The second coat shall be applied in a direction approximately at right angles to the direction of application of the first coat. The compound shall form a uniform, continuous, coherent film that will not check, crack, or peel and shall be free from pinholes or other imperfections. If pinholes, abrasion, or other discontinuities exist, an additional coat shall be applied to the affected areas within 30 minutes. Concrete surfaces that are subjected to heavy rainfall within 3 hours after the curing compound has been applied shall be resprayed by the method and at the coverage specified above. Areas where the curing compound is damaged by subsequent construction operations within the curing period shall be resprayed. Necessary precautions shall be taken to insure that the concrete is properly cured at sawed joints, and that no curing compound enters the joints. The top

of the joint opening and the joint groove at exposed edges shall be tightly sealed before the concrete in the region of the joint is resprayed with curing compound. The method used for sealing the joint groove shall prevent loss of moisture from the joint during the entire specified curing period. Approved standby facilities for curing concrete pavement shall be provided at a location accessible to the jobsite for use in the event of mechanical failure of the spraying equipment or other conditions that might prevent correct application of the membrane-curing compound at the proper time. Concrete surfaces to which membrane-curing compounds have been applied shall be adequately protected during the entire curing period from pedestrian and vehicular traffic, except as required for joint-sawing operations and surface tests, and from any other possible damage to the continuity of the membrane.

3.4.2 Backfilling

After curing, debris shall be removed and the area adjoining the concrete shall be backfilled, graded, and compacted to conform to the surrounding area in accordance with lines and grades indicated.

3.4.3 Protection

Completed concrete shall be protected from damage until accepted. Repair damaged concrete and clean concrete discolored during construction. Concrete that is damaged shall be removed and reconstructed for the entire length between regularly scheduled joints. Refinishing the damaged portion will not be acceptable. Removed damaged portions shall be disposed of as directed.

3.4.4 Protective Coating

Protective coating, of linseed oil mixture, shall be applied to the exposed-to-view concrete surface after the curing period, if concrete will be exposed to de-icing chemicals within 6 weeks after placement. Concrete to receive a protective coating shall be moist cured.

3.4.4.1 Application

Curing and backfilling operation shall be completed prior to applying two coats of protective coating. Concrete shall be surface dry and clean before each application. Coverage shall be by spray application at not more than 50 square yards/gallon for first application and not more than 70 square yards/gallon for second application, except that the number of applications and coverage for each application for commercially prepared mixture shall be in accordance with the manufacturer's instructions. Coated surfaces shall be protected from vehicular and pedestrian traffic until dry.

3.4.4.2 Precautions

Protective coating shall not be heated by direct application of flame or electrical heaters and shall be protected from exposure to open flame, sparks, and fire adjacent to open containers or applicators. Material shall not be applied at ambient or material temperatures lower than 50 degrees F.

3.5 FIELD QUALITY CONTROL

Submit copies of all test reports within 24 hours of completion of the

test.

3.5.1 General Requirements

Perform the inspection and tests described and meet the specified requirements for inspection details and frequency of testing. Based upon the results of these inspections and tests, take the action and submit reports as required below, and any additional tests to insure that the requirements of these specifications are met.

3.5.2 Concrete Testing

3.5.2.1 Strength Testing

Provide molded concrete specimens for strength tests. Samples of concrete placed each day shall be taken not less than once a day nor less than once for every 250 cubic yards of concrete. The samples for strength tests shall be taken in accordance with ASTM C172/C172M. Cylinders for acceptance shall be molded in conformance with ASTM C31/C31M by an approved testing laboratory. Each strength test result shall be the average of 2 test cylinders from the same concrete sample tested at 28 days, unless otherwise specified or approved. Concrete specified on the basis of compressive strength will be considered satisfactory if the averages of all sets of three consecutive strength test results equal or exceed the specified strength, and no individual strength test result falls below the specified strength by more than 500 psi.

3.5.2.2 Air Content

Determine air content in accordance with ASTM C173/C173M or ASTM C231/C231M. ASTM C231/C231M shall be used with concretes and mortars made with relatively dense natural aggregates. Two tests for air content shall be made on randomly selected batches of each class of concrete placed during each shift. Additional tests shall be made when excessive variation in concrete workability is reported by the placing foreman or the Government inspector. If results are out of tolerance, the placing foreman shall be notified and he shall take appropriate action to have the air content corrected at the plant. Additional tests for air content will be performed on each truckload of material until such time as the air content is within the tolerance specified.

3.5.2.3 Slump Test

Two slump tests shall be made on randomly selected batches of each class of concrete for every 250 cubic yards, or fraction thereof, of concrete placed during each shift. Additional tests shall be performed when excessive variation in the workability of the concrete is noted or when excessive crumbling or slumping is noted along the edges of slip-formed concrete.

3.5.3 Thickness Evaluation

The anticipated thickness of the concrete shall be determined prior to placement by passing a template through the formed section or by measuring the depth of opening of the extrusion template of the curb forming machine. If a slip form paver is used for sidewalk placement, the subgrade shall be true to grade prior to concrete placement and the thickness will be determined by measuring each edge of the completed slab.

3.5.4 Surface Evaluation

The finished surface of each category of the completed work shall be uniform in color and free of blemishes and form or tool marks.

3.6 SURFACE DEFICIENCIES AND CORRECTIONS

3.6.1 Thickness Deficiency

When measurements indicate that the completed concrete section is deficient in thickness by more than 1/4 inch the deficient section will be removed, between regularly scheduled joints, and replaced.

3.6.2 High Areas

In areas not meeting surface smoothness and plan grade requirements, high areas shall be reduced either by rubbing the freshly finished concrete with carborundum brick and water when the concrete is less than 36 hours old or by grinding the hardened concrete with an approved surface grinding machine after the concrete is 36 hours old or more. The area corrected by grinding the surface of the hardened concrete shall not exceed 5 percent of the area of any integral slab, and the depth of grinding shall not exceed 1/4 inch. Pavement areas requiring grade or surface smoothness corrections in excess of the limits specified above shall be removed and replaced.

3.6.3 Appearance

Exposed surfaces of the finished work will be inspected by the Government and any deficiencies in appearance will be identified. Areas which exhibit excessive cracking, discoloration, form marks, or tool marks or which are otherwise inconsistent with the overall appearances of the work shall be removed and replaced.

-- End of Section --

SECTION 32 17 23.00 20

PAVEMENT MARKINGS
04/06

PART 1 GENERAL

1.1 REFERENCES

The publications listed below form a part of this specification to the extent referenced. The publications are referred to in the text by the basic designation only.

INTERNATIONAL CONCRETE REPAIR INSTITUTE (ICRI)

ICRI 03732	(1997) Selecting and Specifying Concrete Surface Preparation for Sealers, Coatings, and Polymer Overlays

1.2 SUBMITTALS

Government approval is required for submittals with a "G" designation; submittals not having a "G" designation are for information only or as otherwise designated. When used, a designation following the "G" designation identifies the office that will review the submittal for the Government. Submit the following in accordance with Section 01 33 00 SUBMITTAL PROCEDURES:

SD-03 Product Data

Paints for roads and streets; G

1.3 DELIVERY AND STORAGE

Deliver paints, paint materials and thermoplastic compound materials in original sealed containers that plainly show the designated name, specification number, batch number, color, date of manufacture, manufacturer's directions, and name of manufacturer. Provide storage facilities at the job site.

1.4 WEATHER LIMITATIONS

Apply paint to clean, dry surfaces, and unless otherwise approved, only when the air and pavement surface temperature is at least 5 degrees above the dew point and the air and pavement temperatures are above 40 degrees F and less than 95 degrees F for oil-based materials; above 50 degrees F and less than 110 degrees F for water-based materials. Maintain paint temperature within these same limits.

1.5 EQUIPMENT

Machines, tools, and equipment used in the performance of the work shall be approved by the Contracting Officer and maintained in satisfactory operating condition. Submit construction equipment list for approval by the Contracting Officer.

1.5.1 Mobile and Maneuverable

Application equipment shall be mobile and maneuverable to the extent that straight lines can be followed and normal curves can be made in a true arc.

1.5.2 Paint Application Equipment

1.5.2.1 Hand-Operated, Push-Type Machines

Provide hand-operated push-type applicator machine of a type commonly used for application of paint to pavement surfaces. Paint applicator machine shall be acceptable for marking small street and parking areas. Applicator machine shall be equipped with the necessary paint tanks and spraying nozzles, and shall be capable of applying paint uniformly at coverage specified. Applicator for water-based markings shall be equipped with non-stick coated hoses; metal parts in contact with the paint material shall be constructed of grade 302, 304, 316, or equal stainless steel.

PART 2 PRODUCTS

2.1 MATERIALS

Provide materials conforming to the requirements specified herein.

2.1.1 Paints for Roads and Streets

MPI 32, FS TT-P-1952, High Build Acrylic Coating (HBAC), color as selected.

PART 3 EXECUTION

3.1 SURFACE PREPARATION

Thoroughly clean surfaces to be marked before application of the paint. Remove dust, dirt, and other granular surface deposits by sweeping, blowing with compressed air, rinsing with water, or a combination of these methods as required. Remove coatings adhering to the pavement by water blasting. For Portland Cement Concrete pavement, grinding, light shot blasting, and light scarification, to a resulting profile equal to ICRI 03732 CSP 2, CSP 3, and CSP 4, respectively, can be used in addition to water blasting, to either remove existing coatings or for surface preparation on most pavements. Scrub affected areas, where oil or grease is present on old pavements to be marked, with several applications of trisodium phosphate solution or other approved detergent or degreaser and rinse thoroughly after each application. After cleaning oil-soaked areas, seal with shellac or primer recommended by the manufacturer to prevent bleeding through the new paint. Do not commence painting in any area until pavement surfaces are dry and clean.

3.2 APPLICATION

3.2.1 Testing for Moisture

Apply pavement markings to dry pavement only. The Contractor shall test the pavement surface for moisture before beginning work after each period of rainfall, fog, high humidity, or cleaning, or when the ambient temperature has fallen below the dew point. Do not commence marking until the pavement is sufficiently dry and the pavement condition has been

approved by the CO or authorized representative. Employ the "plastic wrap method" to test the pavement for moisture as follows: Cover the pavement with a 300 mm by 300 mm (12 inch by 12 inch) section of clear plastic wrap and seal the edges with tape. After 15 minutes, examine the plastic wrap for any visible moisture accumulation inside the plastic. Do not begin marking operations until the test can be performed with no visible moisture accumulation inside the plastic wrap.

3.2.2 Rate of Application

3.2.2.1 Nonreflective Markings

Apply paint evenly to the pavement surface to be coated at a rate of 105 plus or minus 5 square feet per gallon. Apply High Build Acrylic Coating (HBAC) at a rate of 50 square feet per gallon.

3.3 FIELD TESTING, INSPECTION, AND DEMONSTRATIONS

3.3.1 Sampling and Testing

As soon as the paint materials are available for sampling, obtain by random selection from the sealed containers, two quart samples of each batch in the presence of the Contracting Officer. Accomplish adequate mixing prior to sampling to ensure a uniform, representative sample. A batch is defined as that quantity of material processed by the manufacturer at one time and identified by number on the label. Clearly identify samples by designated name, specification number, batch number, project contract number, intended use, and quantity involved. At the discretion of the Contracting Officer, samples provided may be tested by the Government for verification.

3.3.2 Inspection

Examine material at the job site to determine that it is the material referenced in the report of test results or certificate of compliance. A certificate of compliance shall be accompanied by test results substantiating conformance to the specified requirements.

3.3.3 Surface Preparations and Application Procedures

Surface preparations and application procedures will be examined by the Contracting Officer to determine conformance with the requirements specified. Approve each separate operation prior to initiation of subsequent operations.

3.4 QUALITY ASSURANCE

Demonstrate success of bond of new paint marking and the pavement surface, vacuum cured surface of new marking after a seven (7) day dry time. Inspect newly applied markings for signs of bond failure based on visual inspection and comparison to results from Test Stripe Demonstration paragraph.

-- End of Section --

THIS PAGE HAS BEEN INTENTIONALLY LEFT BLANK

SECTION 32 31 13.53

HIGH-SECURITY CHAIN LINK FENCES AND GATES
04/08

PART 1 GENERAL

1.1 REFERENCES

The publications listed below form a part of this specification to the extent referenced. The publications are referred to within the text by the basic designation only.

ASTM INTERNATIONAL (ASTM)

ASTM A116	(2011) Standard Specification for Metallic-Coated, Steel Woven Wire Fence Fabric
ASTM A121	(2013) Standard Specification for Metallic-Coated Carbon Steel Barbed Wire
ASTM A153/A153M	(2009) Standard Specification for Zinc Coating (Hot-Dip) on Iron and Steel Hardware
ASTM A240/A240M	(2015b) Standard Specification for Chromium and Chromium-Nickel Stainless Steel Plate, Sheet, and Strip for Pressure Vessels and for General Applications
ASTM A392	(2011a) Standard Specification for Zinc-Coated Steel Chain-Link Fence Fabric
ASTM A478	(1997; R 2013) Standard Specification for Chromium-Nickel Stainless Steel Weaving and Knitting Wire
ASTM A780/A780M	(2009; R 2015) Standard Practice for Repair of Damaged and Uncoated Areas of Hot-Dip Galvanized Coatings
ASTM A824	(2001; R 2012) Standard Specification for Metallic-Coated Steel Marcelled Tension Wire for Use With Chain Link Fence
ASTM C94/C94M	(2015) Standard Specification for Ready-Mixed Concrete
ASTM F1043	(2014) Strength and Protective Coatings on Metal Industrial Chain-Link Fence Framework
ASTM F1083	(2013) Standard Specification for Pipe, Steel, Hot-Dipped Zinc Coated (Galvanized) Welded, for Fence Structures
ASTM F1184	(2005; R 2010) Industrial and Commercial

	Horizontal Slide Gates
ASTM F567	(2014a) Standard Practice for Installation of Chain Link Fence
ASTM F626	(2014) Standard Specification for Fence Fittings
ASTM F900	(2011) Industrial and Commercial Swing Gates

U.S. GENERAL SERVICES ADMINISTRATION (GSA)

FS RR-F-191	(Rev K) Fencing, Wire and Post Metal (and Gates, Chain-Link Fence Fabric, and Accessories)
FS RR-F-191/1	(Rev F) Fencing, Wire and Post, Metal (Chain-Link Fence Fabric)
FS RR-F-191/2	(Rev E) Fencing, Wire and Post, Metal (Chain-Link Fence Gates)
FS RR-F-191/3	(Rev E; Am 1) Fencing, Wire and Post, Metal (Chain-Link Fence Posts, Top Rails and Braces)
FS RR-F-191/4	(Rev F) Fencing, Wire and Post, Metal (Chain-Link Fence Accessories)

1.2 SUBMITTALS

Government approval is required for submittals with a "G" designation; submittals not having a "G" designation are for Contractor Quality Control approval. Submit the following in accordance with Section 01 33 00 SUBMITTAL PROCEDURES:

SD-02 Shop Drawings

Fence Installation; G
Installation Drawings; G
Location of gate, corner, end, and pull posts; G
Gate Assembly; G
Gate Hardware and Accessories; G

SD-03 Product Data

Fence Installation; G
Gate Assembly; G
Gate Hardware and Accessories; G

SD-04 Samples

Sleeves
Barbed Tape
Wire Ties

SD-07 Certificates

Chain Link Fence
Reports
Zinc Coating

aluminum alloy coating
Fabric
Barbed Wire
Stretcher Bars
Gate Hardware and Accessories
Concrete
Gate Operator

SD-08 Manufacturer's Instructions

Fence Installation
Gate Assembly
Hardware Assembly
Accessories

SD-10 Operation and Maintenance Data

Electro-Mechanical Locks
Gate Operator
operating and maintenance instructions

1.3 QUALITY ASSURANCE

1.3.1 Required Report Data

Submit reports, signed by an official authorized to certify on behalf of the manufacturer, of chain-link fencing listing and accessories regarding weight in ounces for zinc coating, thickness of PVC coating, and chemical composition and thickness of aluminum alloy coating. Submit reports demonstrating full compliance with the following standards: FS RR-F-191, FS RR-F-191/1, FS RR-F-191/2, FS RR-F-191/3, and FS RR-F-191/4

1.3.2 Assembly and Installation Drawings

Submit Manufacturer's instructions and complete Fence Installation Drawings for review and approval by the Contracting Officer prior to shipment. Drawing details shall include, but are not limited to: Fence Installation, Location of gate, corner, end, and pull posts, Gate Assembly, and Gate Hardware and Accessories.

1.4 DELIVERY, STORAGE, AND HANDLING

Deliver materials to site in an undamaged condition. Store materials off the ground to provide protection against oxidation caused by ground contact.

PART 2 PRODUCTS

2.1 FENCE FABRIC

2.1.1 General

Provide ASTM A392, , zinc-coated steel wire with minimum coating weight of 1.2 ounces of zinc per square foot of coated surface, Fabricate fence fabric of 9 gauge wire woven in 2 inch mesh conforming to ASTM A116.

Set fabric height at 7 feet . Fabric shall be twisted and barbed on the top selvage and knuckled on the bottom selvage. Secure fabric to posts using stretcher bars or ties spaced 15 inches on center, or by integrally weaving to integral fastening loops of end, corner, pull, and gate posts for full length of each post. Install fabric on opposite side of posts from area being secured.

2.2 POSTS

2.2.1 Metal Posts for Chain Link Fence

FS RR-F-191/3 line posts; Class 1, steel pipe, Grade A .

2.2.2 Accessories

Provide the following accessories:

a. Provide accessories conforming to ASTM F626. Ferrous accessories shall be zinc or aluminum coated.

b. Furnish truss rods for each terminal post. Provide truss rods with turnbuckles or other equivalent provisions for adjustment.

c. Provide Barbed wire supporting arms of the 45 degree outward angle 3-strand arm type and of the design required for the post furnished. Secure arms by top tension wire.

d. Furnish post caps in accordance with manufacturer's standard accessories.

e. Provide 9 gauge steel tie wire for attaching fabric to rails, braces, and posts and match the coating of the fence fabric. Miscellaneous hardware coatings shall conform to ASTM A153/A153M unless modified.

2.3 BRACES AND RAILS

Braces, top rail and bottom rail; Class 1, steel pipe, Grade A or B minimum sizes listed in FS RR-F-191/3 for each class and grade.

2.4 WIRE

2.4.1 Wire Ties

Submit samples as specified. FS RR-F-191/4. Provide wire ties constructed of the same material as the fencing fabric.

2.4.2 Barbed Wire

Provide barbed wire conforming to ASTM A121 zinc-coated, Type Z, Class 3, or aluminum-coated, Type A, with 12.5 gauge wire with 14 gauge, round, 4-point barbs spaced no more than 5 inches apart.

2.4.3 Tension Wire

Provide Type I or Type II tension wire, Class 4 coating, in accordance with ASTM A824.

2.5 BARBED TAPE

Provide reinforced barbed tape, , for fence toppings fabricated from 430 series stainless steel with a hardness range of Rockwell (30N) 37-45 conforming to the requirements of ASTM A240/A240M. Provide stainless steel strip 0.025 inch thick by 1 inch wide before fabrication. Each barb shall be a minimum of 1.2 inch in length, in groups of 4, spaced on 4 inch centers. The stainless steel core wire shall have a 0.098 inch diameter with a minimum tensile strength of 140 psi and be in accordance with ASTM A478.

2.6 CONCRETE

ASTM C94/C94M, using 3/4 inch maximum size aggregate, and having minimum compressive strength of 3000 psi at 28 days. Grout shall consist of one part portland cement to three parts clean, well-graded sand and the minimum amount of water to produce a workable mix.

2.7 GATES

2.7.1 Gate Assembly

Provide gate assembly conforming to ASTM F900 and/or ASTM F1184 of the type and swing shown. Provide gate frames conforming to strength and coating requirements of ASTM F1083 for Group IA, steel pipe, with external coating Type A, nominal pipe size (NPS) 1-1/2. Provide gate frames conforming to strength and coating requirements of ASTM F1043, for Group IC, steel pipe with external coating Type A or Type B, nominal pipe size (NPS) 1-1/2. Gate fabric shall be as specified for chain link fabric.

2.7.2 Gate Leaves

For gate leaves, more than 8 feet wide, provide either intermediate members and diagonal truss rods or tubular members as necessary to provide rigid construction, free from sag or twist. Gate leaves less than 8 feet wide shall have truss rods or intermediate braces. Provide intermediate braces on all gate frames with an electro-mechanical lock. Attach fabric to the gate frame by method standard with the manufacturer except that welding will not be permitted.

2.7.3 Gate Hardware and Accessories

Submit manufacturer's catalog data. Furnish and install latches, hinges, stops, keepers, rollers, and other hardware items as required for the operation of the gate. Arrange latches for padlocking so that the padlock will be accessible from both sides of the gate. Provide stops for holding the gates in the open position. For high security applications, each end member of gate frames shall be extended sufficiently above the top member to carry three strands of barbed wire in horizontal alignment with barbed wire strands on the fence.

2.8 GATE OPERATOR

Provide electric gate operators for sliding gates as follows: Electrical gate operators shall have a right angle gearhead instantly reversing motor with magnetic drum-type brake, friction disc clutch, reversing starter with thermal overload protection, and a chain-driven geared rotary-type automatic limit switch. Gears shall consist of a hardened steel machine cut worm and mating bronze gear. All gears and bearings shall operate in

a bath of oil. Gate operators with V-belt pulleys are not allowed. Equip gate operators with an emergency release to allow the gate to be operated manually. The emergency release mechanism shall be capable of being locked in the engaged or disengaged position. Provide positive stops on the gate tracks as a backup to the limit switches.

2.9 ELECTRO-MECHANICAL LOCKS

Electro-mechanical locking devices for sliding gates and personnel gates shall be solenoid actuated such that the deadbolt retracts when the solenoid is energized and remains electrically retracted until the gate is closed. Provide continuous duty type solenoid, rated for 120V ac, 60Hz operation. The locking device shall be unlockable by key and keyed on both sides. Status of the electro-mechanical lock shall be monitored by two limit switches (integral to the locking device) wired in series. One switch shall monitor the deadlock lever and the other monitor the locking tongue.

PART 3 EXECUTION

3.1 FENCE INSTALLATION

Perform complete installation conforming to ASTM F567.

3.1.1 Line and Grade

Install fence to the lines and grades indicated. Clear the area on either side of the fence line to the extent indicated. Space line posts equidistant at intervals not exceeding 10 feet. Terminal (corner, gate, and pull) posts shall be set at abrupt changes in vertical and horizontal alignment. Provide fabric continuous between terminal posts; however, runs between terminal posts shall not exceed 500 feet. Repair any damage to galvanized surfaces, including welding, with paint containing zinc dust in accordance with ASTM A780/A780M.

3.1.2 Excavation

Clear all post holes of loose material. Spread waste material where directed. Eliminate ground surface irregularities along the fence line to the extent necessary to maintain a 2 inch clearance between the bottom of the fabric and finish grade.

3.1.3 Concrete Slabs and Walls

Set posts into zinc-coated sleeves, set in concrete slab or wall, to a minimum depth of 12 inches. Fill sleeve joint with lead, nonshrink grout, or other approved material. Set posts for support of removable fence sections into sleeves that provide a tight sliding joint and hold posts aligned and plumb without use of lead or setting material.

3.2 POST INSTALLATION

3.2.1 Earth and Bedrock

Install as follows and according to manufacturer's instructions.

a. Set posts plumb and in alignment. Except where solid rock is encountered, set posts in concrete to the depth indicated on the drawings. Where solid rock is encountered with no overburden, set

posts to a minimum depth of 18 inches in rock. Where solid rock is covered with an overburden of soil or loose rock, set posts to the minimum depth indicated on the drawing unless a penetration of 18 inches in solid rock is achieved before reaching the indicated depth, in which case terminate depth of penetration. Grout all portions of posts set in rock.

b. Portions of posts not set in rock shall be set in concrete from the rock to ground level. Posts set in concrete shall be set in holes not less than the diameter shown on the drawings. Make diameters of holes in solid rock at least 1 inch greater than the largest cross section of the post. Thoroughly consolidate concrete and grout around each post, free of voids and finished to form a dome. Allow concrete and grout to cure for 72 hours prior to attachment of any item to the posts. Group II line posts may be mechanically driven, for temporary fence construction only, if rock is not encountered. Set driven posts to a minimum depth of 3 feet and protect with drive caps when setting.

c. Test fence post rigidity by applying a 50 pound force on the post, perpendicular to the fabric, at 5 feet above ground. Post movement measured at the point where the force is applied shall be less than or equal to 3/4 inch from the relaxed position. Test every tenth post for rigidity. When a post fails this test, make further tests on the next four posts on either side of the failed post. All failed posts shall be removed, replaced, and retested at the Contractor's expense.

3.2.2 Concrete Slabs and Walls

Set posts into zinc-coated sleeves, set in concrete slab or wall, to a minimum depth of 12 inches. Fill sleeve joint with lead, nonshrink grout, or other approved material. Set posts for support of removable fence sections into sleeves that provide a tight sliding joint and hold posts aligned and plumb without use of lead or setting material.

3.3 RAILS

Bolt bottom rail to double rail ends and securely fasten double rail ends to the posts. Peen bolts to prevent easy removal. Install bottom rail before chain link fabric.

3.4 FABRIC INSTALLATION

Install fabric as follows:

a. Install chain link fabric on the side of the post indicated. Attach fabric to terminal posts with stretcher bars and tension bands. Space bands at approximately 15 inch intervals. Install fabric and pull taut to provide a smooth and uniform appearance free from sag, without permanently distorting the fabric diamond or reducing the fabric height. Fasten fabric to line posts at approximately 15 inch intervals and fastened to all rails and tension wires at approximately 24 inch intervals.

b. Cut fabric by untwisting and removing pickets. Accomplish splicing by weaving a single picket into the ends of the rolls to be joined. The bottom of the installed fabric shall be 2 plus or minus 1/2 inch above the ground.

c. After the fabric installation is complete, exercise the fabric by

applying a 50 pound push-pull force at the center of the fabric between posts; the use of a 30 pound pull at the center of the panel shall cause fabric deflection of not more than 2.5 inches when pulling fabric from the post side of the fence; every second fence panel shall meet this requirement; resecure and retest all failed panels at the Contractor's expense.

3.5 SUPPORTING ARMS

Install barbed wire supporting arms and barbed wire as indicated on the drawings and as recommended by the manufacturer. Anchor supporting arms to the posts in a manner to prevent easy removal with hand tools Pull barbed wire taut and attach to the arms with clips or other means that will prevent easy removal.

3.6 GATE INSTALLATION

Install gate as follows:

a. Install gates at the locations shown. Install latches, stops, and keepers as required. Install Slide gates as recommended by the manufacturer.

b. Weld or otherwise secure hinge pins, and hardware assembly to prevent removal.

c. Submit 6 copies of operating and maintenance instructions, a minimum of 2 weeks prior to field training. Operating instructions shall outline the step-by-step procedures required for system startup, operation, and shutdown. Include the manufacturer's name, model number, service manual, parts list, and brief description of all equipment and their basic operating features. Include in the maintenance instructions routine maintenance procedures, possible breakdowns and repairs, and troubleshooting guide. Also include the general gate layout, equipment layout and simplified wiring and control diagrams of the system as installed.

3.7 GROUNDING

Grounding in accordance with the following:

a. Ground fencing as indicated on drawings.

b. Ground fences on each side of all gates, at each corner, at the closest approach to each building located within 50 feet of the fence, and where the fence alignment changes more than 15 degrees. Grounding locations shall not exceed 650 feet. Bond each gate panel with a flexible bond strap to its gate post. Ground fences crossed by powerlines of 600 volts or more at or near the point of crossing and at distances not exceeding 150 feet on each side of crossing.

3.8 CLEANUP

Remove waste fencing materials and other debris from the work site each workday.

-- End of Section --

SECTION 32 92 23

SODDING
04/06

PART 1 GENERAL

1.1 REFERENCES

The publications listed below form a part of this specification to the extent referenced. The publications are referred to within the text by the basic designation only.

ASTM INTERNATIONAL (ASTM)

ASTM C602	(2013a) Agricultural Liming Materials
ASTM D4427	(2013) Peat Samples by Laboratory Testing
ASTM D4972	(2013) pH of Soils

TURFGRASS PRODUCERS INTERNATIONAL (TPI)

TPI GSS	(1995) Guideline Specifications to Turfgrass Sodding

U.S. DEPARTMENT OF AGRICULTURE (USDA)

DOA SSIR 42	(1996) Soil Survey Investigation Report No. 42, Soil Survey Laboratory Methods Manual, Version 3.0

1.2 DEFINITIONS

1.2.1 Stand of Turf

100 percent ground cover of the established species.

1.3 SUBMITTALS

Government approval is required for submittals with a "G" designation; submittals not having a "G" designation are for Contractor Quality Control approval. Submit the following in accordance with Section 01 33 00 SUBMITTAL PROCEDURES:

SD-03 Product Data

Fertilizer

Include physical characteristics, and recommendations.

SD-06 Test Reports

Topsoil composition tests (reports and recommendations); G

SD-07 Certificates

Nursery or Sod farm certification for sods; G. Indicate type of

sod in accordance with TPI GSS.

1.4 DELIVERY, STORAGE, AND HANDLING

1.4.1 Delivery

1.4.1.1 Sod Protection

Protect from drying out and from contamination during delivery, on-site storage, and handling.

1.4.1.2 Fertilizer and Lime Delivery

Deliver to the site in original, unopened containers bearing manufacturer's chemical analysis, name, trade name, trademark, and indication of conformance to state and federal laws.

1.4.2 Storage

1.4.2.1 Sod Storage

Lightly sprinkle with water, cover with moist burlap, straw, or other approved covering; and protect from exposure to wind and direct sunlight until planted. Provide covering that will allow air to circulate so that internal heat will not develop. Do not store sod longer than 24 hours. Do not store directly on concrete or bituminous surfaces.

1.4.2.2 Topsoil

Prior to stockpiling topsoil, treat growing vegetation with application of appropriate specified non-selective herbicide. Clear and grub existing vegetation three to four weeks prior to stockpiling topsoil.

1.4.2.3 Handling

Do not drop or dump materials from vehicles.

1.5 TIME RESTRICTIONS AND PLANTING CONDITIONS

1.5.1 Restrictions

Do not plant when the ground is frozen, snow covered, muddy, or when air temperature exceeds 90 degrees Fahrenheit.

1.6 TIME LIMITATIONS

1.6.1 Sod

Place sod a maximum of thirty six hours after initial harvesting, in accordance with TPI GSS as modified herein.

PART 2 PRODUCTS

2.1 SODS

2.1.1 Classification

Nursery grown, certified as classified in the TPI GSS. Machine cut sod at a uniform thickness of 3/4 inch within a tolerance of 1/4 inch, excluding

top growth and thatch. Each individual sod piece shall be strong enough to support its own weight when lifted by the ends. Broken pads, irregularly shaped pieces, and torn or uneven ends will be rejected.

2.1.2 Purity

Sod species shall be genetically pure, free of weeds, pests, and disease.

2.1.3 Planting Dates

Lay sod from March 15 to May 15 for warm season spring planting and from September 15 to November 1 for cool season fall planting.

2.1.4 Composition

2.1.4.1 Proportion

Proportion grass species as follows.

Botanical Name	Common Name	Percent
cynodon dactylon	Bermudagrass	100

2.1.4.2 Sod Farm Overseeding

At the sod farm provide sod with overseeding of annual rye grass seed.

2.2 TOPSOIL

2.2.1 Off-Site Topsoil

Conform to requirements specified in paragraph entitled "Composition." Additional topsoil shall be furnished by the Contractor .

2.2.2 Composition

Containing from 5 to 10 percent organic matter as determined by the topsoil composition tests of the Organic Carbon, 6A, Chemical Analysis Method described in DOA SSIR 42. Maximum particle size, 3/4 inch, with maximum 3 percent retained on 1/4 inch screen. The pH shall be tested in accordance with ASTM D4972. Topsoil shall be free of sticks, stones, roots, and other debris and objectionable materials. Other components shall conform to the following limits:

Silt	25-50 percent
Clay	10-30 percent
Sand	20-35 percent
pH	5.5 to 7.0
Soluble Salts	600 ppm maximum

2.3 SOIL CONDITIONERS

Add conditioners to topsoil as required to bring into compliance with "composition" standard for topsoil as specified herein.

2.3.1 Lime

Commercial grade hydrate limestone containing a calcium carbonate equivalent (C.C.E.) as specified in ASTM C602 of not less than 70 percent.

2.3.2 Peat

Natural product of peat moss derived from a freshwater site and conforming to ASTM D4427. Shred and granulate peat to pass a 1/2 inch mesh screen and condition in storage pile for minimum 6 months after excavation.

2.3.3 Sand

Clean and free of materials harmful to plants.

2.3.4 Composted Derivatives

Ground bark, humus or other green wood waste material free of stones, sticks, and soil stabilized with nitrogen and having the following properties:

2.3.4.1 Particle Size

Minimum percent by weight passing:

a. No. 4 mesh screen 95

b. No. 8 mesh screen 80

2.3.5 Gypsum

Coarsely ground gypsum comprised of calcium sulfate dihydrate 91 percent, calcium 22 percent, sulfur 17 percent; minimum 96 percent passing through 20 mesh screen, 100 percent passing thru 16 mesh screen.

2.3.6 Calcined Clay

Calcined clay shall be granular particles produced from montmorillonite clay calcined to a minimum temperature of 1200 degrees F. Gradation: A minimum 90 percent shall pass a No. 8 sieve; a minimum 99 percent shall be retained on a No. 60 sieve; and a maximum 2 percent shall pass a No. 100 sieve. Bulk density: A maximum 40 pounds per cubic foot.

2.4 FERTILIZER

2.4.1 Granular Fertilizer

Organic, granular controlled release fertilizer containing the following minimum percentages, by weight, of plant food nutrients:

a. 10 percent available nitrogen.

b. 10 percent available phosphorus.

c. 10 percent available potassium.

2.5 WATER

Source of water shall be approved by Contracting Officer and of suitable quality for irrigation containing no element toxic to plant life.

PART 3 EXECUTION

3.1 PREPARATION

3.1.1 Extent Of Work

Provide soil preparation (including soil conditioners), fertilizing, and sodding of all newly graded finished earth surfaces, unless indicated otherwise, and at all areas inside or outside the limits of construction that are disturbed by the Contractor's operations.

3.1.2 Soil Preparation

Provide 4 inches of topsoil to meet indicated finish grade. After areas have been brought to indicated finish grade, incorporate fertilizer, pH adjusters, and soil conditioners into soil a minimum depth of 6 inches by disking, harrowing, tilling or other method approved by the Contracting Officer. Remove debris and stones larger than 3/4 inch in any dimension remaining on the surface after finish grading. Correct irregularities in finish surfaces to eliminate depressions. Protect finished topsoil areas from damage by vehicular or pedestrian traffic.

3.1.2.1 Soil Conditioner Application Rates

Apply soil conditioners at rates as determined by laboratory soil analysis of the soils at the job site. For bidding purposes only apply at rates for the following:

a. Lime 50 pounds per 1000 square feet.

b. Peat 7 cubic yards per 1000 square feet.

3.1.2.2 Fertilizer Application Rates

Apply fertilizer at rates as determined by laboratory soil analysis of the soils at the job site. For bidding purposes only apply at rates for the following:

Organic Granular Fertilizer 3 pounds per 1000 square feet.

3.2 SODDING

3.2.1 Finished Grade and Topsoil

Prior to the commencement of the sodding operation, the Contractor shall verify that finished grades are as indicated on drawings; the placing of topsoil, smooth grading, and compaction requirements have been completed.

The prepared surface shall be a maximum 1 inch below the adjoining grade of any surfaced area. New surfaces shall be blended to existing areas. The prepared surface shall be completed with a light raking to remove from the surface debris and stones over a minimum 5/8 inch in any dimension.

3.2.2 Placing

Place sod a maximum of 36 hours after initial harvesting, in accordance with TPI GSS as modified herein.

3.2.3 Sodding Slopes and Ditches

For slopes 2:1 and greater, lay sod with long edge perpendicular to the contour. For V-ditches and flat bottomed ditches, lay sod with long edge perpendicular to flow of water. Anchor each piece of sod with wood pegs or wire staples maximum 2 feet on center. On slope areas, start sodding at bottom of the slope.

3.2.4 Finishing

After completing sodding, blend edges of sodded area smoothly into surrounding area. Air pockets shall be eliminated and a true and even surface shall be provided. Frayed edges shall be trimmed and holes and missing corners shall be patched with sod.

3.2.5 Rolling

Immediately after sodding, firm entire area except for slopes in excess of 3 to 1 with a roller not exceeding 90 pounds for each foot of roller width.

3.2.6 Watering

Start watering areas sodded as required by daily temperature and wind conditions. Apply water at a rate sufficient to ensure thorough wetting of soil to minimum depth of 6 inches. Run-off, puddling, and wilting shall be prevented. Unless otherwise directed, watering trucks shall not be driven over turf areas. Watering of other adjacent areas or plant material shall be prevented.

3.3 PROTECTION OF TURF AREAS

Immediately after turfing, protect area against traffic and other use.

3.4 RENOVATION OF EXISTING TURF AREA

3.4.1 Aeration

Upon completion of weed eradication operations and Contracting Officer's approval to proceed, aerate turf areas indicated, by approved device. Core, by pulling soil plugs, to a minimum depth of 4 inches. Leave all soil plugs, that are produced, in the turf area. After aeration operations are complete, topdress entire area 1/2 inch depth with the following mixture:

a. 70 percent sand

b. 20 percent humus

c. 5 percent gypsum

d. 5 percent organic fertilizer

Blend all parts of topdressing mixture to a uniform consistency throughout.

Keep clean at all times at least one paved pedestrian access route and one paved vehicular access route to each building. Clean all soil plugs off of other paving when work is complete.

3.5 GROUNDCOVER ESTABLISHMENT PERIOD

Groundcover establishment period will commence on the date that inspection by the Contracting Officer shows that the new turf furnished under this contract has been satisfactorily installed to a 100 percent stand of coverage. The establishment period shall continue for a period of 365 days.

3.5.1 Frequency of Maintenance

Begin maintenance immediately after turf has been installed. Inspect area once a week during the installation and establishment period and perform needed maintenance promptly.

3.5.2 Promotion of Growth

Groundcover shall be maintained in a manner that promotes proper health, growth, natural color.Turf shall have a neat uniform manicured appearance, free of bare areas, ruts, holes, weeds, pests, dead vegetation, debris, and unwanted vegetation that present an unsightly appearance. Mow, remove excess clippings, eradicate weeds, water, fertilize, overseed, and perform other operations necessary to promote growth, as approved by Contracting Officer and consistent with approved Integrated Pest Management Plan. Remove noxious weeds common to the area from planting areas by mechanical means.

3.5.3 Mowing

3.5.3.1 Turf

Turf shall be mowed at a uniform finished height. Mow turfed areas to a minimum average height of 2 inches when average height of grass becomes 3 inches for spring/summer maintenance and to a minimum average height of 2 inches when the average height of grass reaches 3 inches for fall / winter maintenance. The height of turf is measured from the soil. Mowing of turf shall be performed in a manner that prevents scalping, rutting, bruising, uneven and rough cutting. Prior to mowing, all rubbish, debris, trash, leaves, rocks, paper, and limbs or branches on a turf area shall be picked up and disposed. Adjacent paved areas shall be swept/vacuumed clean.

3.5.3.2 Turf Edging and Trimming

Perimeter of planter bed edges, sidewalks, driveways, curbs, and other paved surfaces shall be edged. Uniformly edge these areas to prevent encroachment of vegetation onto paved surfaces and to provide a clear cut division line between planter beds, turf, and ground cover. Edging is to be accomplished in a manner that prevents scalping, rutting, bruising, uneven and rough cutting. Edging shall be performed on the same day that turf is mowed. Use of string line trimmers is permitted in "soft" areas such as an edge between turf grass and a planter bed. Care shall be exercised to avoid damage to any plant materials, structures, and other landscape features.

Trimming around trees, fences, poles, walls, and other similar objects is to be accomplished to match the height and appearance of surrounding mowed

turf growth. Trimming shall be performed on the same day the turf's mowed. Care shall be exercised to avoid "Girdling" trees located in turf areas. The use of protective tree collars on trees in turf areas may be utilized as a temporary means to avoid injury to tree trunks. At the end of the plant establishment period Contractor will be responsible for removing all protective tree collars.

3.5.4 Post-Fertilizer Application

Do not fertilize wildflowers, groundcover, and grasses. Apply turf fertilizer in a manner that promotes health, growth, vigor, color and appearance of cultivated turf areas. The method of application, fertilizer type and frequencies shall be determined by the laboratory soil analysis results the requirements of the particular turf species.

3.5.5 Replanting

Replant in accordance with other Articles of this Section and within specified planting dates areas which do not have a satisfactory stand of turf.

3.5.6 Final Inspection and Acceptance

Final inspection will be make upon written request from the Contractor at least 10 days prior to the last day of the turf establishment period. Final turf acceptance will be based upon a satisfactory stand of turf.

3.6 RESTORATION

Restore to original condition existing turf areas which have been damaged during turf installation operations. Keep clean at all times at least one paved pedestrian access route and one paved vehicular access route to each building. Clean other paving when work in adjacent areas is complete.

-- End of Section --

SECTION 33 40 00

STORM DRAINAGE UTILITIES
02/10

PART 1 GENERAL

1.1 REFERENCES

The publications listed below form a part of this specification to the extent referenced. The publications are referred to within the text by the basic designation only.

ASTM INTERNATIONAL (ASTM)

ASTM A123/A123M	(2013) Standard Specification for Zinc (Hot-Dip Galvanized) Coatings on Iron and Steel Products
ASTM A48/A48M	(2003; R 2012) Standard Specification for Gray Iron Castings
ASTM A536	(1984; R 2014) Standard Specification for Ductile Iron Castings
ASTM C139	(2014) Standard Specification for Concrete Masonry Units for Construction of Catch Basins and Manholes
ASTM C1433	(2016a) Standard Specification for Precast Reinforced Concrete Box Sections for Culverts, Storm Drains, and Sewers
ASTM C231/C231M	(2014) Standard Test Method for Air Content of Freshly Mixed Concrete by the Pressure Method
ASTM C270	(2014a) Standard Specification for Mortar for Unit Masonry
ASTM C425	(2004; R 2013) Standard Specification for Compression Joints for Vitrified Clay Pipe and Fittings
ASTM C443	(2011) Standard Specification for Joints for Concrete Pipe and Manholes, Using Rubber Gaskets
ASTM C478	(2015a) Standard Specification for Precast Reinforced Concrete Manhole Sections
ASTM C76	(2015) Standard Specification for Reinforced Concrete Culvert, Storm Drain, and Sewer Pipe
ASTM C990	(2009; R 2014) Standard Specification for Joints for Concrete Pipe, Manholes and

	Precast Box Sections Using Preformed Flexible Joint Sealants
ASTM D1056	(2014) Standard Specification for Flexible Cellular Materials - Sponge or Expanded Rubber
ASTM D1171	(2016) Rubber Deterioration - Surface Ozone Cracking Outdoors or Chamber (Triangular Specimens)
ASTM D1557	(2012; E 2015) Standard Test Methods for Laboratory Compaction Characteristics of Soil Using Modified Effort (56,000 ft-lbf/ft3) (2700 kN-m/m3)
ASTM D1751	(2004; E 2013; R 2013) Standard Specification for Preformed Expansion Joint Filler for Concrete Paving and Structural Construction (Nonextruding and Resilient Bituminous Types)
ASTM D1752	(2004a; R 2013) Standard Specification for Preformed Sponge Rubber Cork and Recycled PVC Expansion
ASTM D2167	(2015) Density and Unit Weight of Soil in Place by the Rubber Balloon Method
ASTM D6938	(2015) Standard Test Method for In-Place Density and Water Content of Soil and Soil-Aggregate by Nuclear Methods (Shallow Depth)

NORTH CAROLINA DEPARTMENT OF TRANSPORTATION (NCDOT)

STD SPEC	(2012) Standard Specifications and Provisions

1.2 SUBMITTALS

Government approval is required for submittals with a "G" designation; submittals not having a "G" designation are for Contractor Quality Control approval. Submit the following in accordance with Section 01 33 00 SUBMITTAL PROCEDURES:

SD-07 Certificates

Pipeline Testing
Determination of Density
Frame and Cover for Gratings

1.3 QUALITY CONTROL

Comply with requirements of STD SPEC where required.

1.4 DELIVERY, STORAGE, AND HANDLING

1.4.1 Delivery and Storage

Materials delivered to site shall be inspected for damage, unloaded, and stored with a minimum of handling. Materials shall not be stored directly on the ground. The inside of pipes and fittings shall be kept free of dirt and debris. Before, during, and after installation, plastic pipe and fittings shall be protected from any environment that would result in damage or deterioration to the material. Keep a copy of the manufacturer's instructions available at the construction site at all times and follow these instructions unless directed otherwise by the Contracting Officer. Solvents, solvent compounds, lubricants, elastomeric gaskets, and any similar materials required to install plastic pipe shall be stored in accordance with the manufacturer's recommendations and shall be discarded if the storage period exceeds the recommended shelf life. Solvents in use shall be discarded when the recommended pot life is exceeded.

1.4.2 Handling

Materials shall be handled in a manner that ensures delivery to the trench in sound, undamaged condition. Pipe shall be carried to the trench, not dragged.

PART 2 PRODUCTS

2.1 PIPE FOR CULVERTS AND STORM DRAINS

Pipe for culverts and storm drains shall be of the sizes indicated and shall conform to the requirements specified.

2.1.1 Concrete Pipe

Manufactured in accordance with and conforming to ASTM C76, Class III .

2.2 DRAINAGE STRUCTURES

2.2.1 Precast Reinforced Concrete Box

Manufactured in accordance with and conforming to ASTM C1433.

2.3 MISCELLANEOUS MATERIALS

2.3.1 Concrete

Unless otherwise specified, concrete and reinforced concrete shall conform to the requirements for 4,000 psi concrete under Section 03 30 00 CAST-IN-PLACE CONCRETE. The concrete mixture shall have air content by volume of concrete, based on measurements made immediately after discharge from the mixer, of 5 to 7 percent when maximum size of coarse aggregate exceeds 1-1/2 inches. Air content shall be determined in accordance with ASTM C231/C231M. The concrete covering over steel reinforcing shall not be less than 1 inch thick for covers and not less than 1-1/2 inches thick for walls and flooring. Concrete covering deposited directly against the ground shall have a thickness of at least 3 inches between steel and ground. Expansion-joint filler material shall conform to ASTM D1751, or ASTM D1752, or shall be resin-impregnated fiberboard conforming to the physical requirements of ASTM D1752.

2.3.2 Mortar

Mortar for pipe joints, connections to other drainage structures, and brick or block construction shall conform to ASTM C270, Type M, except that the maximum placement time shall be 1 hour. The quantity of water in the mixture shall be sufficient to produce a stiff workable mortar but in no case shall exceed 6 gallons of water per sack of cement. Water shall be clean and free of harmful acids, alkalis, and organic impurities. The mortar shall be used within 30 minutes after the ingredients are mixed with water. The inside of the joint shall be wiped clean and finished smooth. The mortar head on the outside shall be protected from air and sun with a proper covering until satisfactorily cured.

2.3.3 Precast Concrete Segmental Blocks

Precast concrete segmental block shall conform to ASTM C139, not more than 8 inches thick, not less than 8 inches long, and of such shape that joints can be sealed effectively and bonded with cement mortar.

2.3.4 Precast Reinforced Concrete Manholes

Conform to ASTM C478. Joints between precast concrete risers and tops shall be made with flexible watertight, rubber-type gaskets meeting the requirements of paragraph JOINTS.

2.3.5 Frame and Cover for Gratings

Submit certification on the ability of frame and cover or gratings to carry the imposed live load. Frame and cover for gratings shall be cast gray iron, ASTM A48/A48M, Class 35B or cast ductile iron, ASTM A536, Grade 65-45-12. Weight, shape, size, and waterway openings for grates and curb inlets shall be as indicated on the plans. The word "Storm Sewer" shall be stamped or cast into covers so that it is plainly visible.

2.3.6 Joints

2.3.6.1 Flexible Watertight Joints

a. Materials: Flexible watertight joints shall be made with plastic or rubber-type gaskets for concrete pipe and with factory-fabricated resilient materials for clay pipe. The design of joints and the physical requirements for preformed flexible joint sealants shall conform to ASTM C990, and rubber-type gaskets shall conform to ASTM C443. Factory-fabricated resilient joint materials shall conform to ASTM C425. Gaskets shall have not more than one factory-fabricated splice, except that two factory-fabricated splices of the rubber-type gasket are permitted if the nominal diameter of the pipe being gasketed exceeds 54 inches.

b. Test Requirements: Watertight joints shall be tested and shall meet test requirements of paragraph HYDROSTATIC TEST ON WATERTIGHT JOINTS. Rubber gaskets shall comply with the oil resistant gasket requirements of ASTM C443. Certified copies of test results shall be delivered to the Contracting Officer before gaskets or jointing materials are installed. Alternate types of watertight joint may be furnished, if specifically approved.

2.3.6.2 Flexible Watertight, Gasketed Joints

a. Gaskets: When infiltration or exfiltration is a concern for pipe lines, the couplings may be required to have gaskets. The closed-cell expanded rubber gaskets shall be a continuous band approximately 7 inches wide and approximately 3/8 inch thick, meeting the requirements of ASTM D1056, Type 2 A1 , and shall have a quality retention rating of not less than 70 percent when tested for weather resistance by ozone chamber exposure, Method B of ASTM D1171. Rubber O-ring gaskets shall be 13/16 inch in diameter for pipe diameters of 36 inches or smaller and 7/8 inch in diameter for larger pipe having 1/2 inch deep end corrugation. Rubber O-ring gaskets shall be 1-3/8 inches in diameter for pipe having 1 inch deep end corrugations. O-rings shall meet the requirements of ASTM C990 or ASTM C443. Preformed flexible joint sealants shall conform to ASTM C990, Type B.

b. Connecting Bands: Connecting bands shall be of the type, size and sheet thickness of band, and the size of angles, bolts, rods and lugs as indicated or where not indicated as specified in the applicable standards or specifications for the pipe. Exterior rivet heads in the longitudinal seam under the connecting band shall be countersunk or the rivets shall be omitted and the seam welded.

2.3.6.3 Ductile Iron Pipe

Couplings and fittings shall be as recommended by the pipe manufacturer.

2.4 STEEL LADDER

Steel ladder shall be provided where the depth of the storm drainage structure exceeds 12 feet. These ladders shall be not less than 16 inches in width, with 3/4 inch diameter rungs spaced 12 inches apart. The two stringers shall be a minimum 3/8 inch thick and 2-1/2 inches wide. Ladders and inserts shall be galvanized after fabrication in conformance with ASTM A123/A123M.

PART 3 EXECUTION

3.1 EXCAVATION FOR PIPE CULVERTS, STORM DRAINS, AND DRAINAGE STRUCTURES

Excavation of trenches, and for appurtenances and backfilling for culverts and storm drains, shall be in accordance with the requirements specified below.

3.1.1 Trenching

The width of trenches at any point below the top of the pipe shall be not greater than the outside diameter of the pipe plus 12 inches to permit satisfactory jointing and thorough tamping of the bedding material under and around the pipe. Sheeting and bracing, where required, shall be placed within the trench width as specified, without any overexcavation. Where trench widths are exceeded, redesign with a resultant increase in cost of stronger pipe or special installation procedures will be necessary. Cost of this redesign and increased cost of pipe or installation shall be borne by the Contractor without additional cost to the Government.

3.1.2 Removal of Rock

Rock in either ledge or boulder formation shall be replaced with suitable materials to provide a compacted earth cushion having a thickness between unremoved rock and the pipe of at least 8 inches or 1/2 inch for each foot of fill over the top of the pipe, whichever is greater, but not more than three-fourths the nominal diameter of the pipe. Where bell-and-spigot pipe is used, the cushion shall be maintained under the bell as well as under the straight portion of the pipe.

3.1.3 Removal of Unstable Material

Where wet or otherwise unstable soil incapable of properly supporting the pipe, as determined by the Contracting Officer, is unexpectedly encountered in the bottom of a trench, such material shall be removed to the depth required and replaced to the proper grade with select granular material, compacted as provided in paragraph BACKFILLING. When removal of unstable material is due to the fault or neglect of the Contractor while performing shoring and sheeting, water removal, or other specified requirements, such removal and replacement shall be performed at no additional cost to the Government.

3.2 BEDDING

The bedding surface for the pipe shall provide a firm foundation of uniform density throughout the entire length of the pipe.

3.2.1 Concrete Pipe Requirements

When no bedding class is specified or detailed on the drawings, concrete pipe shall be bedded in granular material minimum 4 inch in depth in trenches with soil foundation. Depth of granular bedding in trenches with rock foundation shall be 1/2 inch in depth per foot of depth of fill, minimum depth of bedding shall be 8 inch up to maximum depth of 24 inches. The middle third of the granular bedding shall be loosely placed. Bell holes and depressions for joints shall be removed and formed so entire barrel of pipe is uniformly supported. The bell hole and depressions for the joints shall be not more than the length, depth, and width required for properly making the particular type of joint.

3.3 PLACING PIPE

Each pipe shall be thoroughly examined before being laid; defective or damaged pipe shall not be used. Pipelines shall be laid to the grades and alignment indicated. Proper facilities shall be provided for lowering sections of pipe into trenches. Lifting lugs in vertically elongated metal pipe shall be placed in the same vertical plane as the major axis of the pipe. Pipe shall not be laid in water, and pipe shall not be laid when trench conditions or weather are unsuitable for such work. Diversion of drainage or dewatering of trenches during construction shall be provided as necessary.

3.3.1 Concrete Pipe

Laying shall proceed upgrade with spigot ends of bell-and-spigot pipe and tongue ends of tongue-and-groove pipe pointing in the direction of the flow.

3.4 JOINTING

3.4.1 Concrete Pipe

3.4.1.1 Flexible Watertight Joints

Gaskets and jointing materials shall be as recommended by the particular manufacturer in regard to use of lubricants, cements, adhesives, and other special installation requirements. Surfaces to receive lubricants, cements, or adhesives shall be clean and dry. Gaskets and jointing materials shall be affixed to the pipe not more than 24 hours prior to the installation of the pipe, and shall be protected from the sun, blowing dust, and other deleterious agents at all times. Gaskets and jointing materials shall be inspected before installing the pipe; any loose or improperly affixed gaskets and jointing materials shall be removed and replaced. The pipe shall be aligned with the previously installed pipe, and the joint pushed home. If, while the joint is being made the gasket becomes visibly dislocated the pipe shall be removed and the joint remade.

3.5 DRAINAGE STRUCTURES

3.5.1 Manholes and Inlets

Construction shall be of precast reinforced concrete complete with frames and covers or gratings; and with fixed galvanized steel ladders where indicated. Pipe connections to concrete manholes and inlets shall be made with flexible, watertight connectors.

3.6 STEEL LADDER INSTALLATION

Ladder shall be adequately anchored to the wall by means of steel inserts spaced not more than 6 feet vertically, and shall be installed to provide at least 6 inches of space between the wall and the rungs. The wall along the line of the ladder shall be vertical for its entire length.

3.7 BACKFILLING

3.7.1 Backfilling Pipe in Trenches

After the pipe has been properly bedded, selected material from excavation or borrow, at a moisture content that will facilitate compaction, shall be placed along both sides of pipe in layers not exceeding 6 inches in compacted depth. The backfill shall be brought up evenly on both sides of pipe for the full length of pipe. The fill shall be thoroughly compacted under the haunches of the pipe. Each layer shall be thoroughly compacted with mechanical tampers or rammers. This method of filling and compacting shall continue until the fill has reached an elevation equal to the midpoint (spring line) of RCP. The remainder of the trench shall be backfilled and compacted by spreading and rolling or compacted by mechanical rammers or tampers in layers not exceeding 8 inches. Tests for density shall be made as necessary to ensure conformance to the compaction requirements specified below. Where it is necessary, in the opinion of the Contracting Officer, that sheeting or portions of bracing used be left in place, the contract will be adjusted accordingly. Untreated sheeting shall not be left in place beneath structures or pavements.

3.7.2 Backfilling Pipe in Fill Sections

For pipe placed in fill sections, backfill material and the placement and

compaction procedures shall be as specified below. The fill material shall be uniformly spread in layers longitudinally on both sides of the pipe, not exceeding 6 inches in compacted depth, and shall be compacted by rolling parallel with pipe or by mechanical tamping or ramming. Prior to commencing normal filling operations, the crown width of the fill at a height of 12 inches above the top of the pipe shall extend a distance of not less than twice the outside pipe diameter on each side of the pipe or 12 feet, whichever is less. After the backfill has reached at least 12 inches above the top of the pipe, the remainder of the fill shall be placed and thoroughly compacted in layers not exceeding 8 inches.

3.7.3 Movement of Construction Machinery

When compacting by rolling or operating heavy equipment parallel with the pipe, displacement of or injury to the pipe shall be avoided. Movement of construction machinery over a storm drain at any stage of construction shall be at the Contractor's risk. Any damaged pipe shall be repaired or replaced.

3.7.4 Compaction

3.7.4.1 General Requirements

Cohesionless materials include gravels, gravel-sand mixtures, sands, and gravelly sands. Cohesive materials include clayey and silty gravels, gravel-silt mixtures, clayey and silty sands, sand-clay mixtures, clays, silts, and very fine sands. When results of compaction tests for moisture-density relations are recorded on graphs, cohesionless soils will show straight lines or reverse-shaped moisture-density curves, and cohesive soils will show normal moisture-density curves.

3.7.4.2 Minimum Density

Backfill over and around the pipe and backfill around and adjacent to drainage structures shall be compacted at the approved moisture content to the following applicable minimum density, which will be determined as specified below.

a. Under unpaved or turfed traffic areas, density shall not be less than 90 percent of maximum density for cohesive material and 95 percent of maximum density for cohesionless material.

b. Under nontraffic areas, density shall be not less than that of the surrounding material.

3.7.5 Determination of Density

Testing is the responsibility of the Contractor and performed at no additional cost to the Government. Testing shall be performed by an approved commercial testing laboratory or by the Contractor subject to approval. Tests shall be performed in sufficient number to ensure that specified density is being obtained. Laboratory tests for moisture-density relations shall be made in accordance with ASTM D1557 except that mechanical tampers may be used provided the results are correlated with those obtained with the specified hand tamper. Field density tests shall be determined in accordance with ASTM D2167 or ASTM D6938. When ASTM D6938 is used, the calibration curves shall be checked and adjusted, if necessary, using the sand cone method as described in paragraph Calibration of the referenced publications.

ASTM D6938 results in a wet unit weight of soil and ASTM D6938 shall be used to determine the moisture content of the soil. The calibration curves furnished with the moisture gauges shall be checked along with density calibration checks as described in ASTM D6938. Test results shall be furnished the Contracting Officer. The calibration checks of both the density and moisture gauges shall be made at the beginning of a job on each different type of material encountered and at intervals as directed.

3.8 PIPELINE TESTING

3.8.1 Post-Installation Inspection

Check each reinforced concrete pipe installation for joint separations, soil migration through the joint, cracks greater than 0.01 inches, settlement and alignment.

a. Replace pipes having cracks greater than 0.1 inches in width or deflection greater than 5 percent deflection. An engineer shall evaluate all pipes with cracks greater than 0.01 inches but less than 0.10 inches to determine if any remediation or repair is required. RCP with crack width less than 0.10 inches and located in a non-corrosive environment (pH 5.5) are generally acceptable. Repair or replace any pipe with crack exhibiting displacement across the crack, exhibiting bulges, creases, tears, spalls, or delamination.

b. Reports: The deflection results and final post installation inspection report shall include: a copy of all video taken, pipe location identification, equipment used for inspection, inspector name, deviation from design, grade, deviation from line, deflection and deformation of flexible pipe systems, inspector notes, condition of joints, condition of pipe wall (e.g. distress, cracking, wall damage dents, bulges, creases, tears, holes, etc.).

-- End of Section --

THIS PAGE HAS BEEN INTENTIONALLY LEFT BLANK

SECTION 33 51 15

NATURAL-GAS / LIQUID PETROLEUM GAS DISTRIBUTION
02/16

PART 1 GENERAL

1.1 SUMMARY

The gas distribution system includes natural gas piping and appurtenances from point of connection with the Utility metering station (Point of Delivery) to the Heating Plant (Building 152). This line is approximately 550 feet in total length.

1.2 REFERENCES

The publications listed below form a part of this specification to the extent referenced. The publications are referred to within the text by the basic designation only.

AMERICAN GAS ASSOCIATION (AGA)

AGA XR0603	(2006; 8th Ed) AGA Plastic Pipe Manual for Gas Service

AMERICAN PETROLEUM INSTITUTE (API)

API Spec 5L	(2012; ERTA 2015) Specification for Line Pipe
API Spec 6D	(2014; Errata 1-2 2014; Errata 3-5 2015; ADD 1 2015) Specification for Pipeline Valves
API Std 1104	(2013; Errata 1-3 2014; Addendum 1 2014; Errata 4 2015; Addendum 2 2016) Welding of Pipeline and Related Facilities

AMERICAN SOCIETY OF CIVIL ENGINEERS (ASCE)

ASCE 25-06	(2008) Earthquake-Activated Automatic Gas Shutoff Devices

AMERICAN WATER WORKS ASSOCIATION (AWWA)

AWWA C203	(2008) Coal-Tar Protective Coatings and Linings for Steel Water Pipelines - Enamel and Tape - Hot-Applied
AWWA C213	(2015) Fusion-Bonded Epoxy Coating for the Interior and Exterior of Steel Water Pipelines

ASME INTERNATIONAL (ASME)

ASME B1.20.1	(2013) Pipe Threads, General Purpose (Inch)

ASME B16.11	(2011) Forged Fittings, Socket-Welding and Threaded
ASME B16.21	(2011) Nonmetallic Flat Gaskets for Pipe Flanges
ASME B16.34	(2013) Valves - Flanged, Threaded and Welding End
ASME B16.5	(2013) Pipe Flanges and Flanged Fittings: NPS 1/2 Through NPS 24 Metric/Inch Standard
ASME B16.9	(2012) Standard for Factory-Made Wrought Steel Buttwelding Fittings
ASME B31.3	(2012) Process Piping
ASME B31.8	(2014; Supplement 2014) Gas Transmission and Distribution Piping Systems
ASME BPVC SEC VIII D1	(2010) BPVC Section VIII-Rules for Construction of Pressure Vessels Division 1
ASME PTC 25	(2014) Pressure Relief Devices

ASTM INTERNATIONAL (ASTM)

ASTM A135/A135M	(2009; R2014) Standard Specification for Electric-Resistance-Welded Steel Pipe
ASTM A139/A139M	(2016) Standard Specification for Electric-Fusion (ARC)-Welded Steel Pipe (NPS 4 and over)
ASTM A181/A181M	(2014) Standard Specification for Carbon Steel Forgings, for General-Purpose Piping
ASTM A53/A53M	(2012) Standard Specification for Pipe, Steel, Black and Hot-Dipped, Zinc-Coated, Welded and Seamless
ASTM D3308	(2012) PTFE Resin Skived Tape

U.S. DEPARTMENT OF DEFENSE (DOD)

UFC 3-430-09	(16 Jan 2004 with Change 1, 25 March 2009) Exterior Mechanical Utility Distribution

MANUFACTURERS STANDARDIZATION SOCIETY OF THE VALVE AND FITTINGS INDUSTRY (MSS)

MSS SP-25	(2013) Standard Marking System for Valves, Fittings, Flanges and Unions
MSS SP-78	(2011) Cast Iron Plug Valves, Flanged and Threaded Ends

MASTER PAINTERS INSTITUTE (MPI)

MPI 9	(Oct 2009) Exterior Alkyd, Gloss, MPI Gloss Level 6

NACE INTERNATIONAL (NACE)

NACE SP0185	(2007) Extruded Polyolefin Resin Coating Systems with Soft Adhesives for Underground or Submerged Pipe
NACE SP0274	(1974; R 2011) High Voltage Electrical Inspection of Pipeline Coatings

NATIONAL FIRE PROTECTION ASSOCIATION (NFPA)

NFPA 54	(2015) National Fuel Gas Code
NFPA 58	(2014; TIA 13-1; TIA 13-2; Errata 13-1; TIA 13-3; Errata 14-2) Liquefied Petroleum Gas Code

SOCIETY FOR PROTECTIVE COATINGS (SSPC)

SSPC 7/NACE No.4	(2007; E 2004) Brush-Off Blast Cleaning
SSPC Paint 25	(1997; E 2004) Zinc Oxide, Alkyd, Linseed Oil Primer for Use Over Hand Cleaned Steel, Type I and Type II
SSPC SP 1	(2015) Solvent Cleaning
SSPC SP 3	(1982; E 2004) Power Tool Cleaning
SSPC SP 6/NACE No.3	(2007) Commercial Blast Cleaning

U.S. NATIONAL ARCHIVES AND RECORDS ADMINISTRATION (NARA)

49 CFR 192	Transportation of Natural and Other Gas by Pipeline: Minimum Federal Safety Standards

UNDERWRITERS LABORATORIES (UL)

UL FLAMMABLE & COMBUSTIBLE	(2012) Flammable and Combustible Liquids and Gases Equipment Directory

1.3 SUBMITTALS

Government approval is required for submittals with a "G" designation; submittals not having a "G" designation are for Contractor Quality Control approval. Submit the following in accordance with Section 01 33 00 SUBMITTAL PROCEDURES:

SD-02 Shop Drawings

Pipe, Fittings, and Associated Materials; G
Gas Line Profile Drawings

SD-03 Product Data

Materials and Equipment; G
Spare Parts; G
Pipe and Accessory Coatings; G

SD-05 Design Data

Connections to Existing Lines; G

SD-06 Test Reports

Pressure and Leak Tests
Test Pit Investigation Report

SD-07 Certificates

Welder's training, qualifications and procedures
Utility Work

SD-10 Operation and Maintenance Data

Gas Distribution System and Equipment Operation; G
Gas Distribution Equipment Maintenance; G

1.4 QUALITY ASSURANCE

1.4.1 Qualifications

1.4.1.1 Welding General

a. Submit a certificate of Welder's training, qualifications and procedures, in conformance with API Std 1104, for metal along with a list of names and identification symbols of performance qualified welders and welding operators.

b. Welding and nondestructive testing procedures for pressure piping are specified in Section 23 52 33.03 20 WATER-TUBE BOILERS, OIL/GAS OR OIL.

1.4.2 Pre-Installation Conference

1.4.2.1 Shop Drawings

Submit shop drawings, within 60 days of contract award, containing complete schematic and piping diagrams and any other details required to demonstrate that the system has been coordinated and functions properly as a unit. Show on the drawings proposed layout and anchorage of the system and appurtenances, and equipment relationship to other parts of the work including clearances for maintenance and operation.

1.4.2.2 Connecting and Abandonment Plan

Submit written notification of the method and schedule for making connections to new gas lines and the new metering station, to the Contracting Officer at least 10 days in advance. Include gas line tie in, hot taps, abandonment/removal or demolition, purging, and plugging as applicable in conformance with ASME B31.8 Include in submittal connections to new metering station and connection to plant natural gas piping.

1.4.2.3 Gas Line Profile Drawings

Submit gas line profile from gas meter station (point of delivery) to building interface (Building 152). Gas line profile to be at appropriate scale and to include the following information; existing/proposed grading above gas line, cover above gas line to finish grade, utility crossings, clearances between gas line and other utilities, test pit information at each utility crossing (elevation, pipe size, material and type of utility), and new gas line pipe diameter and pipe material.

1.5 DELIVERY, STORAGE, AND HANDLING

1.5.1 Delivery and Storage

Inspect materials delivered to the site for damage, and store with a minimum of handling. Store materials on site in enclosures or under protective coverings. Store plastic piping under cover out of direct sunlight. Do not store materials directly on the ground. Keep inside of pipes and fittings free of dirt and debris.

1.5.2 Handling

Handle pipe and components carefully to ensure a sound, undamaged condition. Take particular care not to damage pipe coating. Repair damaged coatings to original finish. Do not place pipe or material of any kind inside another pipe or fitting after the coating has been applied, except as specified in paragraph INSTALLATION. Handle steel piping with coal-tar enamel coating in accordance with AWWA C203, and fusion-bonded epoxy coatings per AWWA C213. Handle plastic pipe in conformance with AGA XR0603.

1.6 EXTRA MATERIALS

Submit spare parts data for each different item of equipment and material specified, after approval of the detail shop drawings and not later than 2 months prior to the date of beneficial occupancy. Include in the data a complete list of parts and supplies, with current unit prices and source of supply.

PART 2 PRODUCTS

2.1 PIPE, FITTINGS, AND ASSOCIATED MATERIALS

Provide materials and equipment which are the standard products of a manufacturer regularly engaged in the manufacture of the products and that essentially duplicate items that have been in satisfactory use for at least 2 years prior to bid opening. Asbestos or products containing asbestos are not allowed. Provide written verification and point of contact for a supporting service organization that is, in the opinion of the Contracting Officer, reasonably convenient to the site. Mark all valves, flanges, and fittings in accordance with MSS SP-25. Submit a complete list of materials and equipment, including manufacturer's descriptive and technical literature, performance charts and curves, catalog cuts, and installation instructions, including, but not limited to the following:

a. Dielectric Waterways and Flange Kits.
b. Emergency Gas Supply Connection.
c. Fittings.

d. Piping.
e. Pipe and Accessory coatings.
f. Pressure Reducing Valves.
g. Meters.
h. Regulators.
i. Shut-off Valves.
j. Earthquake Actuated Automatic Gas Shut-off System conforming to ASCE 25-06, if required.
k. Excess flow valve.

2.1.1 Steel Pipe

API Spec 5L, Grade B, or X42, ASTM A53/A53M, Grade A or B, ASTM A135/A135M, or ASTM A139/A139M, Grade A or B, Schedule 40. Do not coat pipe and fittings for aboveground lines. Provide butt weld wrought steel fittings, conforming to ASME B16.9, Schedule 40. Provide forged steel socket weld fittings, conforming to ASME B16.11. Verify that pipe wall thickness conforms to ASME B31.8 for larger sizes and high pressures.

2.1.2 Small Fittings

For sizes 1-1/2 inches and smaller, provide fittings conforming to ASME B16.11.

2.1.3 Fittings, 2 inches and Larger

Provide pipe flanges and flanged fittings, including bolts, nuts, and bolt patterns in accordance with ASME B16.5, Class 150. Provide buttweld fittings in accordance with ASME B16.9. Use weld neck flanges.

2.1.4 Steel Forged Branch Connections

Provide steel forged branch connections conforming to ASTM A181/A181M, Class 60, carbon steel.

2.1.5 Flange Gaskets

Provide non-asbestos compressed material gaskets in accordance with ASME B16.21, 1/16 inch minimum thickness, full face or self-centering flat ring type, containing aramid fibers bonded with nitrile butadiene rubber (NBR), or glass fibers bonded with polytetrafluoroethylene, suitable for maximum 600 degrees F service and meeting applicable requirements of ASME B31.8.

2.1.6 Pipe Threads

Provide threaded pipe conforming to ASME B1.20.1.

2.1.7 Corrugated Stainless Steel Tubing (CSST) Aboveground to Buildings and Vaults

2.1.7.1 Manifolds

Steel with butt weld or socket welded connection/ports in accordance with ASME B31.3.

2.1.8 Sealants for Steel Pipe Threaded Joints

2.1.8.1 Sealing Compound

Provide joint sealing compound as listed in UL FLAMMABLE & COMBUSTIBLE, Class 20 or less.

2.1.8.2 Tape

Provide polyetrafluoroethylene tape conforming to ASTM D3308.

2.1.9 Identification

Provide pipe flow markings and metal tags for each valve, meter, and regulator as required by the Contracting Officer.

2.1.10 Insulating Joint Materials

Provide insulating joint materials between flanged or threaded metallic pipe systems to isolate galvanic or electrolytic action.

2.1.10.1 Threaded Joints

For threaded pipe joints, provide steel body nut type, dielectric waterways with insulating gaskets.

2.1.10.2 Flanged Joints

For flanged pipe joints, provide full face sandwich-type flange insulating gasket of the dielectric type, insulating sleeves for flange bolts and insulating washers for flange nuts.

2.1.10.3 Dielectric Waterways and Flanges

Provide dielectric waterways with temperature and pressure rating equal to or greater than that specified for the connecting piping, with metal connections on both ends suited to match connecting piping. Provide internally lined dielectric waterways, lined with an insulator specifically designed to prevent current flow between dissimilar metals, meeting the performance requirements described herein for dielectric waterways.

2.2 VALVES

Provide valves suitable for shutoff or isolation service and conforming to , MSS SP-78and the following:

2.2.1 Steel Valves

Provide steel valves 1-1/2 inches and smaller installed underground conforming to ASME B16.34, carbon steel, socket weld ends, with square wrench operator adaptor. Provide steel valves 1-1/2 inches and smaller installed aboveground conforming to ASME B16.34, carbon steel, socket weld or threaded ends with handwheel or wrench operator. Provide steel valves 2 inches and larger installed underground conforming to API Spec 6D, carbon steel, buttweld ends, Class 150 with square wrench operator adaptor. Provide steel valves 2 inches and larger installed aboveground conforming to API Spec 6D, carbon steel, buttweld or flanged ends, Class 150 with handwheel or wrench operator.

2.2.2 Steel Valve Operators

Provide valves 8 inches and larger with worm or spur gear operators, totally enclosed, grease packed, and sealed, with operators having Open and Closed stops and position indicators. Provide locking feature where indicated. Wherever the lubricant connections are not conveniently accessible, provide extensions for the application of lubricant. Provide valves with lubricant compatible with gas service.

2.3 PRESSURE REGULATORS

Provide ferrous bodied regulators with backflow protection, designed to meet the pressure, load and other service conditions.

2.3.1 Gas Main Regulators

Equip pressure regulators for main distribution lines, supplied from a source of gas which is at a higher pressure than the maximum allowable operating pressure for the system, with pressure regulating devices of adequate capacity. In addition to the pressure regulating devices, provide a protective method to prevent overpressuring of the system in accordance with ASME B31.8. Suitable protective devices are as follows:

a. Spring-loaded relief valve meeting the provisions of ASME BPVC SEC VIII D1.

b. Pilot-loaded back pressure regulator used as relief valve, so designed that failure of the pilot system causes the regulator to open.

c. Weight-loaded relief valves conforming to ASME PTC 25.

d. Monitoring regulator installed in series with the primary pressure regulator.

e. Series regulator installed upstream from the primary regulator, set to limit the pressure on the inlet of the primary regulator continuously to the maximum allowable operating pressure of the system, or less.

f. Automatic shutoff device installed in series with the primary regulator, set to shut off when the pressure on the distribution system reaches the maximum allowable operating pressure of the system, or less, which remains closed until manually reset.

g. Spring-loaded, diaphragm type relief valves.

2.3.2 Service Line Regulators

a. Provide ferrous bodied pressure regulators for each boiler service lines, integral with the fuel control skid capable of reducing distribution line pressure to pressures required for the boiler.

b. Provide regulator(s) having a single port with orifice diameter no greater than that recommended by the manufacturer for the maximum gas pressure at the regulator inlet capable of providing 110,000 SCFH at 30 to 45 psig. Provide regulator valve plug of resilient materials designed to withstand flow conditions when pressed against the valve port, capable of regulating downstream pressure within limits of accuracy and limiting the buildup of pressure under no-flow conditions

to 50 percent or less of the discharge pressure maintained under flow conditions. Provide a self contained service regulator, and pipe not exceeding exceed4 inch size.

2.4 EARTHQUAKE ACTUATED AUTOMATIC GAS SHUTOFF SYSTEM

Provide Earthquake Actuated Automatic Gas Shutoff devices conforming to ASCE 25-06 UL or CSA listed and requirements furnished by the Contracting Officer . The valve may be either pendulum or ball construction with pneumatic, electronic, or electric actuator.

2.5 PROTECTIVE COVERING MATERIALS

Provide a continuously extruded polyethylene and adhesive coating system material conforming to NACE SP0185, Type A.

PART 3 EXECUTION

3.1 EXAMINATION

After becoming familiar with all details of the work, verify all dimensions in the field, and advise the Contracting Officer of any discrepancy before performing the work.

3.2 GAS MAINS

Provide steel pipe for gas mains. Coat steel pipe and fittings with protective covering as specified.

3.3 SERVICE LINES AND EMERGENCY GAS SUPPLY CONNECTION

3.3.1 General

Construct service lines of materials specified for gas mains and extend from the point of delivery at the metering station to and including the point inside the building connecting to the plant distribution piping system. The point of delivery is the meter set assembly. Where indicated, provide above ground service line with an emergency shutoff valve within 10' from the building exterior wall of the same size as the service line as required by NFPA 54. Emergency shutoff valve shall be clearly marked as such and able to be locked in the closed position. Install the service lines to the route shown on the Drawing between the point of delivery and the plant gas distribution piping system. Lay service lines with as few joints as practicable using standard lengths of pipe, use shorter lengths only for closures. Do not install service lines on Government side of the point of delivery.

3.4 WORKMANSHIP AND DEFECTS

Ensure pipe and fittings are clear and free of cutting burrs and defects in structure or weld preparation, and thoroughly brushed and blown free of chips and scale. Do not repair, but replace defective pipe or fittings.

3.5 PROTECTIVE COVERING

3.5.1 Protective Covering for Underground Steel Pipe

Except as otherwise specified, apply protective coverings mechanically in a factory or field plant especially equipped for the purpose. Hand apply

protective covering to valves and fittings that cannot be coated and wrapped mechanically, preferably at the plant that applies the covering to the pipe. Coat and wrap joints by hand, in a manner and with materials that produce a covering equal in thickness to that of the covering applied mechanically.

3.5.1.1 Thermoplastic Resin Coating System

Provide a thermoplastic coating system conforming to NACE SP0185, Type A. Clean the exterior of the pipe to a commercial grade blast cleaning finish in accordance with SSPC SP 6/NACE No.3, and apply adhesive compound to the pipe. Immediately after the adhesive is applied, extrude a seamless tube of polyethylene over the adhesive to produce a bonded seamless coating, with a nominal thickness of 10 mils (plus or minus 10 percent) of adhesive and 40 mils (plus or minus 10 percent) of polyethylene for pipes up to 16 inches in diameter. For pipes 18 inches and larger in diameter, apply a minimum thickness to the pipe of 10 mils (plus or minus 10 percent) adhesive and 60 mils (plus or minus 10 percent) polyethylene. Apply joint coating and field repair material as recommended by the coating manufacturer, consisting of one the following:

a. Heat shrinkable polyethylene sleeves.

b. Polyvinyl chloride pressure-sensitive adhesive tape.

c. High density polyethylene/bituminous rubber compound tape.

Inspect the coating system for holes, voids, cracks, and other damage during installation.

3.5.1.2 Inspection of Pipe Coatings

Repair any damage to the protective covering during transit and handling before installation. After field coating and wrapping has been applied, inspect the entire pipe using an electric holiday detector with impressed current set at a value in accordance with NACE SP0274 using a full-ring, spring-type coil electrode. Equip the holiday detector with a bell, buzzer, or other type of audible signal which sounds when a holiday is detected. Immediately repair all holidays in the protective covering upon detection. The Contracting Officer reserves the right to inspect and determine the suitability of the detector. Furnish labor, materials, and equipment necessary for conducting the inspection.

3.5.2 Protective Covering for Aboveground Piping Systems

Apply finish painting conforming to the applicable paragraphs of Section 09 90 00 PAINTS AND COATINGS and as follows:

3.5.2.1 Ferrous Surfaces

Touch up shop primed surfaces with ferrous metal primer of the same type paint as the shop primer. Solvent-clean surfaces that have not been shop primed in accordance with SSPC SP 1. Mechanically clean surfaces that contain loose rust, loose mill scale, and other foreign substances by power wire brushing in accordance with SSPC SP 3 or brush-off blast clean in accordance with SSPC 7/NACE No.4 and primed with ferrous metal primer in accordance with SSPC Paint 25. Finish primed surfaces with two coats of exterior alkyd paint conforming to MPI 9.

3.5.2.2 Nonferrous Surfaces

Do not paint nonferrous surfaces.

3.5.3 Protective Covering for Piping in Valve Boxes and Manholes

Apply protective coating to piping in valve boxes or manholes as specified for underground steel pipe.

3.6 INSTALLATION

Install gas distribution system and equipment in conformance with the manufacturer's recommendations and applicable sections of ASME B31.8, AGA XR0603 and 49 CFR 192. Cut the pipe without damaging the pipe; unless otherwise authorized, use an approved type of mechanical cutter. Use wheel cutters where practicable. On steel pipe6 inches and larger, an approved gas-cutting-and-beveling machine may be used. Install gas piping, appliances, and equipment in accordance with NFPA 54and ASME B31.8.

3.6.1 Installing Pipe Underground

Weld joints in steel pipe except as otherwise permitted for installation of valves. Provide line with 24 inch minimum cover; and place lines on firmly compacted select material for the full length. Where indicated on the gas line profile, encase, bridge, or design the main to withstand any anticipated external loads as specified in ASME B31.8. Provide standard weight black steel pipe encasement material with a protective coating as specified. Separate the pipe from the casing by insulating spacers and seal the ends with casing bushings. Excavate the trench below pipe grade, bed with bank sand, and compact to provide full-length bearing. Laying pipe on blocks to produce uniform grade is not permitted. Ensure that the pipe is clean inside before it is lowered into the trench and keep free of water, soil, and all other foreign matter that might damage or obstruct the operation of the valves, regulators, meters, or other equipment. When work is not in progress, securely close open ends of pipe or fittings with expandable plugs or other suitable means. Minor changes in line or gradient of pipe that can be accomplished through the natural flexibility of the pipe material without producing permanent deformation and without overstressing joints may be made when approved. Make changes in line or gradient that exceed the limitations specified with fittings. When cathodic protection is furnished, provide electrically insulated joints or flanges. After laying of pipe and testing, backfill the trench.

3.6.1.1 Gas Line Clearances

Minimum clearances to be in accordance to UFC 3-430-09. Gas line to maintain cover over top of pipe to finish grade: minimum 24-inches, maximum 36-inches. Gas line to maintain 12-inch minimum vertical and horizontal clearances from other utilities.

3.6.2 Installing Pipe Aboveground

Protect aboveground piping against dirt and other foreign matter, as specified for underground piping. Butt weld joints in steel pipe; however, joints in pipe 1-1/2 inches in diameter and smaller may be socket welded; joints may also be flanged to accommodate the installation of valves. Provide flanges of the weld neck type to match wall thickness of pipe.

3.7 PIPE JOINTS

Design and install pipe joints to effectively sustain the longitudinal pullout forces caused by the contraction of piping or superimposed loads.

3.7.1 Welded Steel Joints

Perform gas pipe weldments as indicated. Make changes in direction of piping by welding fittings only; mitering or notching pipe to form elbows and tees or other similar type construction is not permitted. Branch connection may be made with either welding tees or forged branch outlet fittings. Use forged or flared branch outlet fittings for improvement of flow where attached to the run, and reinforced against external strains. Perform all beveling, alignment, heat treatment, and inspection of welds conforming to ASME B31.8. Remove weld defects and repair the weld, or remove the weld joints entirely and reweld. After filler metal has been removed from its original package, protect it or store so that its characteristics or welding properties are not affected adversely. Do not use electrodes that have been wetted or have lost any of their coating.

3.8 VALVE BOXES

Provide valve boxes of cast iron not less than 3/16 inch thick at each underground valve except where concrete or other type of housing is indicated. Provide valve boxes with locking covers that require a special wrench for removal, and furnish the correctly marked wrench for each box. Cast the word "gas" in the box cover. When the valve is located in a roadway, protect the valve box by a suitable concrete slab at least 3 square feet. When in a sidewalk, provide the top of the box as a removable concrete slab 2 feet square and set flush with the sidewalk. Make the boxes adjustable extension type with screw or slide-type adjustments. Separately support valve boxes to not rest on the pipe, so that no traffic loads can be transmitted to the pipe. Only locate valves valve boxes or inside of buildings.

3.9 PRESSURE REGULATOR INSTALLATION

3.9.1 Service Line Regulatorsas Part of Each Boiler Fuel Skid

Install a shutoff valve, and service regulator on the fuel control skid for each boiler. Install an insulating joint on the inlet side of the skid to prevent flow of electrical current. Provide a 3/8 inch tapped fitting equipped with a plug on both sides of the service regulator for installation of pressure gauges for adjusting the regulator. Terminate all service regulator vents and relief vents through the roof, in the outside air, in rain and insect resistant fittings. Locate the open end of the vent where gas can escape freely into the atmosphere, away from any openings into the building and above areas subject to flooding.

3.10 CONNECTIONS TO EXISTING LINES

3.10.1 Connections to Publicly or Privately Operated Gas Utility Lines

Provide materials for the connections to the existing gas lines. The Utility is to make final connections and turn on the gas. The Utility is to also disconnect, purge and cap, plug or otherwise effectively seal existing lines that are to be a abandoned or taken out of service. Notify the Contracting Officer, in writing, 10 days before final connections and turning on of gas lines. Make necessary arrangements with the Utility for

tie in and activation of new gas lines. Only the Operating Agency/Utility Company may reactivate the system after tie in. Furnish a certification by the Operating Agency/Utility Company that all Utility work has been satisfactorily completed.

3.11 CATHODIC PROTECTION

Provide cathodic protection for all metallic gas piping installed underground.

The base is already provided with cathodic protection for underground steam and condensate lines. New natural gas lines may be covered by this existing system if appropriate coverage is available in the gas line location.

3.12 TESTS

3.12.1 Pressure and Leak Tests

Test the system of gas mains and service lines after construction and before being placed in service, using air as the test medium. Follow all testing recommendations and safety precautions as recommended by the piping manufacturer's specifications, NFPA 54, NFPA 58 and 49 CFR 192. Submit data in booklet form from all pressure tests of the distribution system. The normal operating pressure for the system is 45 psig. The test pressure is 68 psig.

a. Prior to testing the system, blow-out, clean, and clear the interior of all foreign materials. Remove all meters, regulators, and controls before blowing out and cleaning,and reinstall after clearing of all foreign materials.

b. Perform testing of gas mains and service lines with due regard for the safety of employees and the public during the test. Keep persons not working on the test operations out of the testing area while testing is proceeding. Perform the test on the system as a whole or on sections that can be isolated.

c. Test joints in sections prior to backfilling when trenches are to be backfilled before the completion of other pipeline sections. Continue the test for at least 24 hours from the time of the initial readings to the final readings of pressure and temperature. Do not take the initial test readings of the instrument for at least 1 hour after the pipe has been subjected to the full test pressure. Do not take initial or final readings at times of rapid changes in atmospheric conditions, and temperatures are representative of the actual trench conditions. No indication of reduction of pressure is allowed during the test after corrections have been made for changes in atmospheric conditions in conformity with the relationship T(1)P(2)=T(2)P(1), in which T and P denote absolute temperature and pressure, respectively, and the numbers denote initial and final readings.

d. During the test, completely isolate the entire system from all compressors and other sources of air pressure. Test each joint by means of soap and water or an equivalent nonflammable solution prior to backfilling or concealing any work. Secure approval of testing instruments from the Contracting Officer. Furnish all labor, materials and equipment for conducting the tests subject to inspection at all times during the tests. Maintain safety precautions for air

pressure testing at all times during the tests.

3.12.2 Test Pit Investigation

This work shall consist of excavating a test pit to the depths of no more than 10-feet at all existing utility crossings with the proposed alignment of the natural gas line. The test pit shall be excavated in a manner to allow an effective and safe visual examination of the subsurface condition exposed for the purpose of locating underground utilities. The test pit investigation report shall be provided to Contracting Officer for each utility crossing, pipe material, pipe diameter and pipe elevation. Upon completion, the test pit will be backfilled, compacted and the site returned to a condition acceptable to the Contracting Officer.

3.13 MAINTENANCE

Submit operation and maintenance data in accordance with Section 01 78 23 OPERATION AND MAINTENANCE DATA, in three separate packages. Submit Data packages, as specified.

3.13.1 Gas Distribution System and Equipment Operation

Include maps showing piping layout, locations of system valves, gas line markers and cathodic protection system test stations; step-by-step procedures for system start up, operation and shutdown (index system components and equipment to the system maps); isolation procedures including valve operation to shutdown or isolate each section of the system (index valves to the system maps and provide separate procedures for normal operation and emergency shutdown if required to be different). Submit Data Package No. 4 per Section 01 78 23.

3.13.2 Gas Distribution Equipment Maintenance

Include identification of valves and other equipment by materials, manufacturer, vendor identification and location; maintenance procedures and recommended tool kits for valves and equipment; recommended repair methods (i.e., field repair, factory repair, or replacement) for each valve and piece of equipment; and preventive maintenance procedures, possible failure modes and troubleshooting guide. Submit Data Package No. 3 per Section 01 78 23.

-- End of Section --

SECTION 33 71 02

UNDERGROUND ELECTRICAL DISTRIBUTION
02/15

PART 1 GENERAL

1.1 REFERENCES

The publications listed below form a part of this specification to the extent referenced. The publications are referred to within the text by the basic designation only.

ASTM INTERNATIONAL (ASTM)

ASTM B1	(2013) Standard Specification for Hard-Drawn Copper Wire
ASTM B3	(2013) Standard Specification for Soft or Annealed Copper Wire
ASTM B8	(2011) Standard Specification for Concentric-Lay-Stranded Copper Conductors, Hard, Medium-Hard, or Soft
ASTM C478	(2015a) Standard Specification for Precast Reinforced Concrete Manhole Sections
ASTM C857	(2014) Standard Practice for Minimum Structural Design Loading for Underground Precast Concrete Utility Structures

INSTITUTE OF ELECTRICAL AND ELECTRONICS ENGINEERS (IEEE)

IEEE C2	(2012; Errata 1 2012; INT 1-4 2012; Errata 2 2013; INT 5-7 2013; INT 8-10 2014; INT 11 2015) National Electrical Safety Code
IEEE Stds Dictionary	(2009) IEEE Standards Dictionary: Glossary of Terms & Definitions

INTERNATIONAL ELECTRICAL TESTING ASSOCIATION (NETA)

NETA ATS	(2013) Standard for Acceptance Testing Specifications for Electrical Power Equipment and Systems

NATIONAL ELECTRICAL MANUFACTURERS ASSOCIATION (NEMA)

ANSI C119.1	(2011) Electric Connectors - Sealed Insulated Underground Connector Systems Rated 600 Volts
NEMA RN 1	(2005; R 2013) Polyvinyl-Chloride (PVC) Externally Coated Galvanized Rigid Steel Conduit and Intermediate Metal Conduit

NEMA TC 2	(2013) Standard for Electrical Polyvinyl Chloride (PVC) Conduit
NEMA TC 3	(2015) Standard for Polyvinyl Chloride (PVC) Fittings for Use With Rigid PVC Conduit and Tubing
NEMA TC 9	(2004) Standard for Fittings for Polyvinyl Chloride (PVC) Plastic Utilities Duct for Underground Installation
NEMA WC 70	(2009) Power Cable Rated 2000 V or Less for the Distribution of Electrical Energy--S95-658

NATIONAL FIRE PROTECTION ASSOCIATION (NFPA)

NFPA 70	(2014; AMD 1 2013; Errata 1 2013; AMD 2 2013; Errata 2 2013; AMD 3 2014; Errata 3-4 2014; AMD 4-6 2014) National Electrical Code

SOCIETY OF CABLE TELECOMMUNICATIONS ENGINEERS (SCTE)

ANSI/SCTE 77	(2013) Specification for Underground Enclosure Integrity

TELECOMMUNICATIONS INDUSTRY ASSOCIATION (TIA)

TIA-758	(2012b) Customer-Owned Outside Plant Telecommunications Infrastructure Standard

U.S. DEPARTMENT OF AGRICULTURE (USDA)

RUS Bull 1751F-644	(2002) Underground Plant Construction

UNDERWRITERS LABORATORIES (UL)

UL 1242	(2006; Reprint Mar 2014) Standard for Electrical Intermediate Metal Conduit -- Steel
UL 44	(2014; Reprint Feb 2015) Thermoset-Insulated Wires and Cables
UL 467	(2007) Grounding and Bonding Equipment
UL 486A-486B	(2013; Reprint Jan 2016) Wire Connectors
UL 514A	(2013) Metallic Outlet Boxes
UL 514B	(2012; Reprint Nov 2014) Conduit, Tubing and Cable Fittings
UL 6	(2007; Reprint Nov 2014) Electrical Rigid Metal Conduit-Steel
UL 651	(2011; Reprint May 2014) Standard for Schedule 40 and 80 Rigid PVC Conduit and

	Fittings
UL 83	(2014) Thermoplastic-Insulated Wires and Cables
UL 854	(2004; Reprint Nov 2014) Standard for Service-Entrance Cables
UL 94	(2013; Reprint Jan 2016) Standard for Tests for Flammability of Plastic Materials for Parts in Devices and Appliances

1.2 DEFINITIONS

a. Unless otherwise specified or indicated, electrical and electronics terms used in these specifications, and on the drawings, are as defined in IEEE Stds Dictionary.

b. In the text of this section, the words conduit and duct are used interchangeably and have the same meaning.

c. In the text of this section, "medium voltage cable splices," and "medium voltage cable joints" are used interchangeably and have the same meaning.

1.3 SUBMITTALS

Government approval is required for submittals with a "G" designation; submittals not having a "G" designation are for Contractor Quality Control approval. Submittals with an "S" are for inclusion in the Sustainability Notebook, in conformance to Section 01 33 29 SUSTAINABILITY REPORTING. Submit the following in accordance with Section 01 33 00 SUBMITTAL PROCEDURES:

SD-03 Product Data

Composite/fiberglass handholes; G

1.4 QUALITY ASSURANCE

1.4.1 Standard Products

Provide materials and equipment that are products of manufacturers regularly engaged in the production of such products which are of equal material, design and workmanship. Products must have been in satisfactory commercial or industrial use for 2 years prior to bid opening. The 2-year period must include applications of equipment and materials under similar circumstances and of similar size. The product must have been for sale on the commercial market through advertisements, manufacturers' catalogs, or brochures during the 2-year period. Where two or more items of the same class of equipment are required, these items must be products of a single manufacturer; however, the component parts of the item need not be the products of the same manufacturer unless stated in this section.

1.4.1.1 Alternative Qualifications

Products having less than a 2-year field service record will be acceptable if a certified record of satisfactory field operation for not less than

6000 hours, exclusive of the manufacturers' factory or laboratory tests, is furnished.

1.4.1.2 Material and Equipment Manufacturing Date

Products manufactured more than 3 years prior to date of delivery to site are not acceptable, unless specified otherwise.

PART 2 PRODUCTS

2.1 CONDUIT, DUCTS, AND FITTINGS

2.1.1 Rigid Metal Conduit

UL 6.

2.1.1.1 Rigid Metallic Conduit, PVC Coated

NEMA RN 1, Type A40, except that hardness must be nominal 85 Shore A durometer, dielectric strength must be minimum 400 volts per mil at 60 Hz, and tensile strength must be minimum 3500 psi.

2.1.2 Intermediate Metal Conduit

UL 1242.

2.1.2.1 Intermediate Metal Conduit, PVC Coated

NEMA RN 1, Type A40, except that hardness must be nominal 85 Shore A durometer, dielectric strength must be minimum 400 volts per mil at 60 Hz, and tensile strength must be minimum 3500 psi.

2.1.3 Plastic Conduit for Direct Burial and Riser Applications

UL 651 and NEMA TC 2, EPC-40 or EPC-80.

2.1.4 Plastic Duct for Concrete Encasement

Provide Type EPC-40 per UL 651 and NEMA TC 2.

2.1.5 Innerduct

Provide corrugated or solid wall polyethylene (PE) or PVC innerducts, or fabric-mesh innerducts, with pullwire. Size as indicated.

2.1.6 Duct Sealant

UL 94, Class HBF. Provide high-expansion urethane foam duct sealant that expands and hardens to form a closed, chemically and water resistant, rigid structure. Sealant must be compatible with common cable and wire jackets and capable of adhering to metals, plastics and concrete. Sealant must be capable of curing in temperature ranges of 35 degrees F to 95 degrees F. Cured sealant must withstand temperature ranges of -20 degrees F to 200 degrees F without loss of function.

2.1.7 Fittings

2.1.7.1 Metal Fittings

UL 514B.

2.1.7.2 PVC Conduit Fittings

UL 514B, UL 651, and NEMA TC 3.

2.1.7.3 PVC Duct Fittings

NEMA TC 9.

2.1.7.4 Outlet Boxes for Steel Conduit

Outlet boxes for use with rigid or flexible steel conduit must be cast-metal cadmium or zinc-coated if of ferrous metal with gasketed closures and must conform to UL 514A.

2.2 LOW VOLTAGE INSULATED CONDUCTORS AND CABLES

Insulated conductors must be rated 600 volts and conform to the requirements of NFPA 70, including listing requirements, or in accordance with NEMA WC 70. Wires and cables manufactured more than 24 months prior to date of delivery to the site are not acceptable. Service entrance conductors must conform to UL 854, type USE.

2.2.1 Conductor Types

Cable and duct sizes indicated are for copper conductors and THHN/THWN unless otherwise noted. Conductors No. 10 AWG and smaller must be solid. Conductors No. 8 AWG and larger must be stranded.

2.2.2 Conductor Material

Unless specified or indicated otherwise or required by NFPA 70, wires in conduit, other than service entrance, must be 600-volt, Type THWN/THHN conforming to UL 83 or Type XHHW conforming to UL 44. Copper conductors must be annealed copper complying with ASTM B3 and ASTM B8.

2.2.3 Cable Marking

Insulated conductors must have the date of manufacture and other identification imprinted on the outer surface of each cable at regular intervals throughout the cable length.

Identify each cable by means of a fiber, laminated plastic, or non-ferrous metal tags, or approved equal, in each manhole, handhole, junction box, and each terminal. Each tag must contain the following information; cable type, conductor size, circuit number, circuit voltage, cable destination and phase identification.

Conductors must be color coded. Provide conductor identification within each enclosure where a tap, splice, or termination is made. Conductor identification must be by color-coded insulated conductors, plastic-coated self-sticking printed markers, colored nylon cable ties and plates, heat shrink type sleeves,or colored electrical tape. Control circuit terminations must be properly identified. Color must be green for

grounding conductors and white for neutrals; except where neutrals of more than one system are installed in same raceway or box, other neutrals must be white with a different colored (not green) stripe for each. Color of ungrounded conductors in different voltage systems must be as follows:

a. 208/120 volt, three-phase

(1) Phase A - black

(2) Phase B - red

(3) Phase C - blue

b. 480/277 volt, three-phase

(1) Phase A - brown

(2) Phase B - orange

(3) Phase C - yellow

c. 120/240 volt, single phase: Black and red

2.3 LOW VOLTAGE WIRE CONNECTORS AND TERMINALS

Must provide a uniform compression over the entire conductor contact surface. Use solderless terminal lugs on stranded conductors.

a. For use with copper conductors: UL 486A-486B.

2.4 LOW VOLTAGE SPLICES

Provide splices in conductors with a compression connector on the conductor and by insulating and waterproofing using one of the following methods which are suitable for continuous submersion in water and comply with ANSI C119.1.

2.4.1 Heat Shrinkable Splice

Provide heat shrinkable splice insulation by means of a thermoplastic adhesive sealant material applied in accordance with the manufacturer's written instructions.

2.4.2 Cold Shrink Rubber Splice

Provide a cold-shrink rubber splice which consists of EPDM rubber tube which has been factory stretched onto a spiraled core which is removed during splice installation. The installation must not require heat or flame, or any additional materials such as covering or adhesive. It must be designed for use with inline compression type connectors, or indoor, outdoor, direct-burial or submerged locations.

2.5 PULL ROPE

Plastic or flat pull line (bull line) having a minimum tensile strength of 200 pounds.

2.6 GROUNDING AND BONDING

2.6.1 Driven Ground Rods

Provide copper-clad steel ground rods conforming to UL 467 not less than 3/4 inch in diameter by 10 feet in length. Sectional type rods may be used for rods 20 feet or longer.

2.6.2 Grounding Conductors

Stranded-bare copper conductors must conform to ASTM B8, Class B, soft-drawn unless otherwise indicated. Solid-bare copper conductors must conform to ASTM B1 for sizes No. 8 and smaller. Insulated conductors must be of the same material as phase conductors and green color-coded, except that conductors must be rated no more than 600 volts. Aluminum is not acceptable.

2.7 CAST-IN-PLACE CONCRETE

Provide concrete in accordance with Section 03 30 00 CAST-IN-PLACE CONCRETE. In addition, provide concrete for encasement of underground ducts with 3000 psi minimum 28-day compressive strength. Concrete associated with electrical work for other than encasement of underground ducts must be 4000 psi minimum 28-day compressive strength unless specified otherwise.

2.8 UNDERGROUND STRUCTURES

Provide precast concrete underground structures or standard type cast-in-place manhole types as indicated, conforming to ASTM C857 and ASTM C478. Top, walls, and bottom must consist of reinforced concrete. Walls and bottom must be of monolithic concrete construction. Locate duct entrances and windows near the corners of structures to facilitate cable racking. Covers must fit the frames without undue play. Form steel and iron to shape and size with sharp lines and angles. Castings must be free from warp and blow holes that may impair strength or appearance. Exposed metal must have a smooth finish and sharp lines and arises. Provide necessary lugs, rabbets, and brackets. Set pulling-in irons and other built-in items in place before depositing concrete. Install a pulling-in iron in the wall opposite each duct line entrance. Cable racks, including rack arms and insulators, must be adequate to accommodate the cable.

2.8.1 Composite/Fiberglass Handholes and Covers

ANSI/SCTE 77. Provide handholes and covers of polymer concrete, reinforced with heavy weave fiberglass with a design load (Tier rating) appropriate for or greater than the intended use. All covers are required to have the Tier level rating embossed on the surface and this rating must not exceed the design load of the box.

PART 3 EXECUTION

3.1 INSTALLATION

Install equipment and devices in accordance with the manufacturer's published instructions and with the requirements and recommendations of NFPA 70 and IEEE C2 as applicable. In addition to these requirements, install telecommunications in accordance with TIA-758 and RUS Bull 1751F-644.

3.2 UNDERGROUND CONDUIT AND DUCT SYSTEMS

3.2.1 Requirements

Run conduit in straight lines except where a change of direction is necessary. Provide numbers and sizes of ducts as indicated. Ducts must have a continuous slope downward toward underground structures and away from buildings, laid with a minimum slope of 3 inches per 100 feet. Depending on the contour of the finished grade, the high-point may be at a terminal, a manhole, a handhole, or between manholes or handholes. Provide ducts with end bells whenever duct lines terminate in structures.

Perform changes in ductbank direction as follows:

a. Short-radius manufactured 90-degree duct bends may be used only for pole or equipment risers, unless specifically indicated as acceptable.

b. The minimum manufactured bend radius must be 18 inches for ducts of less than 3 inch diameter, and 36 inches for ducts 3 inches or greater in diameter.

c. As an exception to the bend radius required above, provide field manufactured longsweep bends having a minimum radius of 25 feet for a change of direction of more than 5 degrees, either horizontally or vertically, using a combination of curved and straight sections. Maximum manufactured curved sections: 30 degrees.

3.2.2 Treatment

Ducts must be kept clean of concrete, dirt, or foreign substances during construction. Field cuts requiring tapers must be made with proper tools and match factory tapers. A coupling recommended by the duct manufacturer must be used whenever an existing duct is connected to a duct of different material or shape. Ducts must be stored to avoid warping and deterioration with ends sufficiently plugged to prevent entry of any water or solid substances. Ducts must be thoroughly cleaned before being laid. Plastic ducts must be stored on a flat surface and protected from the direct rays of the sun.

3.2.3 Conduit Cleaning

As each conduit run is completed, for conduit sizes 3 inches and larger, draw a flexible testing mandrel approximately 12 inches long with a diameter less than the inside diameter of the conduit through the conduit. After which, draw a stiff bristle brush through until conduit is clear of particles of earth, sand and gravel; then immediately install conduit plugs. For conduit sizes less than 3 inches, draw a stiff bristle brush through until conduit is clear of particles of earth, sand and gravel; then immediately install conduit plugs.

3.2.4 Jacking and Drilling Under Roads and Structures

Conduits to be installed under existing paved areas which are not to be disturbed, and under roads and railroad tracks, must be zinc-coated, rigid steel, jacked into place. Where ducts are jacked under existing pavement, rigid steel conduit must be installed because of its strength. To protect the corrosion-resistant conduit coating, predrilling or installing conduit inside a larger iron pipe sleeve (jack-and-sleeve) is required. For crossings of existing railroads and airfield pavements greater than 50 feet

in length, the predrilling method or the jack-and-sleeve method will be used. Separators or spacing blocks must be made of steel, concrete, plastic, or a combination of these materials placed not farther apart than 4 feet on centers.

3.2.5 Galvanized Conduit Concrete Penetrations

Galvanized conduits which penetrate concrete (slabs, pavement, and walls) in wet locations must be PVC coated and must extend from at least 2 inches within the concrete to the first coupling or fitting outside the concrete (minimum of 6 inches from penetration).

3.2.6 Multiple Conduits

Separate multiple conduits by a minimum distance of 3 inches, except that light and power conduits must be separated from control, signal, and telephone conduits by a minimum distance of 12 inches. Stagger the joints of the conduits by rows (horizontally) and layers (vertically) to strengthen the conduit assembly. Provide plastic duct spacers that interlock vertically and horizontally. Spacer assembly must consist of base spacers, intermediate spacers, ties, and locking device on top to provide a completely enclosed and locked-in conduit assembly. Install spacers per manufacturer's instructions, but provide a minimum of two spacer assemblies per 10 feet of conduit assembly.

3.2.7 Conduit Plugs and Pull Rope

New conduit indicated as being unused or empty must be provided with plugs on each end. Plugs must contain a weephole or screen to allow water drainage. Provide a plastic pull rope having 3 feet of slack at each end of unused or empty conduits.

3.2.8 Conduit and Duct Without Concrete Encasement

Depths to top of the conduit must be not less than 24 inches below finished grade. Provide not less than 3 inches clearance from the conduit to each side of the trench. Grade bottom of trench smooth; where rock, soft spots, or sharp-edged materials are encountered, excavate the bottom for an additional 3 inches, fill and tamp level with original bottom with sand or earth free from particles, that would be retained on a 1/4 inch sieve. The first 6 inch layer of backfill cover must be sand compacted as previously specified. The rest of the excavation must be backfilled and compacted in 3 to 6 inch layers.

3.2.8.1 Encasement Under Roads and Structures

Under roads, paved areas, and railroad tracks, install conduits in concrete encasement of rectangular cross-section providing a minimum of 3 inch concrete cover around ducts. Concrete encasement must extend at least 5 feet beyond the edges of paved areas and roads, and 12 feet beyond the rails on each side of railroad tracks. Depths to top of the concrete envelope must be not less than 24 inches below finished grade, and under railroad tracks not less than 50 inches below the top of the rails.

3.2.9 Duct Encased in Concrete

Construct underground duct lines of individual conduits encased in concrete. Depths to top of the concrete envelope must be not less than 18 inches below finished grade, except under roads and pavement, concrete

envelope must be not less than 24 inches below finished grade, and under railroad tracks not less than 50 inches below the top of the rails. Do not mix different kinds of conduit in any one duct bank. Concrete encasement surrounding the bank must be rectangular in cross-section and must provide at least 3 inches of concrete cover for ducts. Separate conduits by a minimum concrete thickness of 3 inches. Before pouring concrete, anchor duct bank assemblies to prevent the assemblies from floating during concrete pouring. Anchoring must be done by driving reinforcing rods adjacent to duct spacer assemblies and attaching the rods to the spacer assembly. Provide steel reinforcing in the concrete envelope as indicated.

3.2.10 Duct Sealing

Seal all electrical penetrations for radon mitigation, maintaining integrity of the vapor barrier, and to prevent infiltration of air, insects, and vermin.

3.3 CABLE PULLING

Pull cables down grade with the feed-in point at the manhole or buildings of the highest elevation. Use flexible cable feeds to convey cables through manhole opening and into duct runs. Do not exceed the specified cable bending radii when installing cable under any conditions, including turnups into switches, transformers, switchgear, switchboards, and other enclosures.

3.3.1 Cable Lubricants

Use lubricants that are specifically recommended by the cable manufacturer for assisting in pulling jacketed cables.

3.4 LOW VOLTAGE CABLE SPLICING AND TERMINATING

Make terminations and splices with materials and methods as indicated or specified herein and as designated by the written instructions of the manufacturer. Do not allow the cables to be moved until after the splicing material has completely set. Make splices in underground distribution systems only in accessible locations such as manholes, handholes, or aboveground termination pedestals.

3.5 GROUNDING SYSTEMS

NFPA 70 and IEEE C2, except provide grounding systems with a resistance to solid earth ground not exceeding 25 ohms.

3.5.1 Grounding Electrodes

Provide cone pointed driven ground rods driven full depth plus 6 inches, installed to provide an earth ground of the appropriate value for the particular equipment being grounded.
If the specified ground resistance is not met, an additional ground rod must be provided in accordance with the requirements of NFPA 70 (placed not less than 6 feet from the first rod). Should the resultant (combined) resistance exceed the specified resistance, measured not less than 48 hours after rainfall, notify the Contracting Officer immediately.

3.5.2 Grounding Connections

Make grounding connections which are buried or otherwise normally inaccessible, by exothermic weld or compression connector.

a. Make exothermic welds strictly in accordance with the weld manufacturer's written recommendations. Welds which are "puffed up" or which show convex surfaces indicating improper cleaning are not acceptable. Mechanical connectors are not required at exothermic welds.

b. Make compression connections using a hydraulic compression tool to provide the correct circumferential pressure. Tools and dies must be as recommended by the manufacturer. An embossing die code or other standard method must provide visible indication that a connector has been adequately compressed on the ground wire.

3.5.3 Fence Grounding

Provide grounding for fences with a ground rod at each fixed gate post and at each corner post. Drive ground rods until the top is 12 inches below grade. Attach a No. 4 AWG copper conductor, by exothermic weld to the ground rods and extend underground to the immediate vicinity of fence post. Lace the conductor vertically into 12 inches of fence mesh and fasten by two approved bronze compression fittings, one to bond wire to post and the other to bond wire to fence. Each gate section must be bonded to its gatepost by a 1/8 by one inch flexible braided copper strap and ground post clamps. Clamps must be of the anti-electrolysis type.

3.6 EXCAVATING, BACKFILLING, AND COMPACTING

Provide in accordance with NFPA 70.

3.6.1 Reconditioning of Surfaces

3.6.1.1 Unpaved Surfaces

Restore to their original elevation and condition unpaved surfaces disturbed during installation of duct or direct burial cable. Preserve sod and topsoil removed during excavation and reinstall after backfilling is completed. Replace sod that is damaged by sod of quality equal to that removed. When the surface is disturbed in a newly seeded area, re-seed the restored surface with the same quantity and formula of seed as that used in the original seeding, and provide topsoiling, fertilizing, liming, seeding, sodding, sprigging, or mulching.

3.6.1.2 Paving Repairs

Where trenches, pits, or other excavations are made in existing roadways and other areas of pavement where surface treatment of any kind exists , restore such surface treatment or pavement the same thickness and in the same kind as previously existed, except as otherwise specified, and to match and tie into the adjacent and surrounding existing surfaces.

3.7 CAST-IN-PLACE CONCRETE

Provide concrete in accordance with Section 03 30 00 CAST-IN-PLACE CONCRETE.

3.7.1 Sealing

When the installation is complete, seal all conduit and other entries into the equipment enclosure with an approved sealing compound. Seals must be of sufficient strength and durability to protect all energized live parts of the equipment from rodents, insects, or other foreign matter.

3.8 FIELD QUALITY CONTROL

3.8.1 Performance of Field Acceptance Checks and Tests

Perform in accordance with the manufacturer's recommendations, and include the following visual and mechanical inspections and electrical tests, performed in accordance with NETA ATS.

3.8.1.1 Low Voltage Cables, 600-Volt

Perform tests after installation of cable, splices and terminations and before terminating to equipment or splicing to existing circuits.

a. Visual and Mechanical Inspection

(1) Inspect exposed cable sections for physical damage.

(2) Verify that cable is supplied and connected in accordance with contract plans and specifications.

(3) Verify tightness of accessible bolted electrical connections.

(4) Inspect compression-applied connectors for correct cable match and indentation.

(5) Visually inspect jacket and insulation condition.

(6) Inspect for proper phase identification and arrangement.

b. Electrical Tests

(1) Perform insulation resistance tests on wiring No. 6 AWG and larger diameter using instrument which applies voltage of approximately 1000 volts dc for one minute.

(2) Perform continuity tests to insure correct cable connection.

3.8.1.2 Grounding System

a. Visual and mechanical inspection

Inspect ground system for compliance with contract plans and specifications.

-- End of Section --

SECTION 40 17 26.00 20

WELDING PRESSURE PIPING
04/06

PART 1 GENERAL

1.1 REFERENCES

The publications listed below form a part of this specification to the extent referenced. The publications are referred to within the text by the basic designation only.

AMERICAN SOCIETY FOR NONDESTRUCTIVE TESTING (ASNT)

ASNT SNT-TC-1A	(2014) Recommended Practice for Personnel Qualification and Certification in Nondestructive Testing

AMERICAN WELDING SOCIETY (AWS)

AWS A2.4	(2012) Standard Symbols for Welding, Brazing and Nondestructive Examination
AWS A3.0M/A3.0	(2010) Standard Welding Terms and Definitions
AWS B2.1/B2.1M	(2014) Specification for Welding Procedure and Performance Qualification
AWS D1.1/D1.1M	(2015) Structural Welding Code - Steel
AWS QC1	(2007) Standard for AWS Certification of Welding Inspectors
AWS Z49.1	(2012) Safety in Welding and Cutting and Allied Processes

ASME INTERNATIONAL (ASME)

ASME B31.1	(2014; INT 1-47) Power Piping
ASME B31.3	(2014) Process Piping
ASME B31.4	(2012) Pipeline Transportation Systems for Liquid Hydrocarbons and Other Liquid
ASME B31.5	(2013) Refrigeration Piping and Heat Transfer Components
ASME B31.9	(2014) Building Services Piping
ASME BPVC SEC I	(2010) BPVC Section I-Rules for Construction of Power Boilers
ASME BPVC SEC II-C	(2010) BPVC Section II-Materials Part C-Specifications for Welding Rods Electrodes and Filler Metals

ASME BPVC SEC IX	(2010) BPVC Section IX-Welding and Brazing Qualifications
ASME BPVC SEC V	(2010) BPVC Section V-Nondestructive Examination

U.S. NATIONAL ARCHIVES AND RECORDS ADMINISTRATION (NARA)

29 CFR 1910	Occupational Safety and Health Standards
29 CFR 1926	Safety and Health Regulations for Construction

1.2 RELATED REQUIREMENTS

Section 23 03 00.00 20 BASIC MECHANICAL MATERIALS AND METHODS applies to this section with the additions and modifications specified herein.

1.3 DEFINITIONS

AWS A3.0M/A3.0 .

1.4 SUBMITTALS

Government approval is required for submittals with a "G" designation; submittals not having a "G" designation are for Contractor Quality Control approval. Submit the following in accordance with Section 01 33 00 SUBMITTAL PROCEDURES:

SD-02 Shop Drawings

Welding pressure piping

SD-07 Certificates

Welding procedures qualification

Nondestructive examination (NDE) procedures

NDE personnel certification procedures

Inspector certification

Submit inspector certification and NDE personnel certification for record.

SD-11 Closeout Submittals

Weld identifications

1.5 QUALITY ASSURANCE

1.5.1 Welding Pressure Piping

Show location, length, and type of welds, and indicate postweld heat treatment and nondestructive testing as required.

1.5.2 Procedures

Develop and qualify procedures for welding metals included in the work. Do not start welding until welding procedures, welders, and welding operators have been qualified. Perform qualification testing by an approved testing laboratory, or by the Contractor if approved by the Contracting Officer in accordance with the qualified procedures. Notify the Contracting Officer at least 24 hours in advance of the time and place of the tests. When practicable, perform the qualification tests at or near the work site. Maintain current records of the test results obtained in welding procedure, welding operator/welder performance qualifications, and nondestructive examination (NDE) procedures. These records shall be readily available at the site for examination by the Contracting Officer. Qualify the procedures for making transition welds between different materials or between plates or pipes of different wall thicknesses. ANSI Piping ANSI B.31 requirements for branch connections may be used in lieu of detailed designs. Unless otherwise specified, the choice of welding process shall be the responsibility of the Contractor.

1.5.2.1 Previous Qualifications

Welding procedures, welders, and welding operators previously qualified by test may be accepted for the work without requalification provided that the following conditions are fulfilled:

a. Copies of welding procedures, procedure qualification test records, and welder and welding operator performance qualification test records are submitted and approved in accordance with the paragraph entitled "Submittals."

b. Testing was performed by an approved testing laboratory or technical consultant or by the Contractor's approved quality control organization.

c. The welding procedures, welders, and welding operators were qualified in accordance with ASME BPVC SEC IX or AWS B2.1/B2.1M, AR-2 level; and base materials, filler materials, electrodes, equipment, and processes conformed to the applicable requirements of this specification.

d. The requirements of paragraph entitled "Welder and Welding Operator Performance Qualification" for renewal of qualification were met, and records showing name of employer and period of employment using the process for which qualified are submitted as evidence of conformance.

1.5.2.2 Performance

The Contractor shall be responsible for the quality of joint preparation, welding, and examination. Clearly identify and record materials used in the welding operations. The examination and testing defined in this specification are minimum requirements. Provide additional examination and testing as necessary to achieve the quality required.

1.5.3 Welding Procedures Qualification

Qualification of the welding procedures for each group of materials to be welded is required as indicated in ASME BPVC SEC IX. Record in detail and qualify the "Welding Procedure Specifications" for every welding procedure proposed. Qualification for each welding procedure shall conform to the requirements of ANSI Standards and to this specification. The welding

procedures shall specify end preparation for welds, including cleaning, alignments, and root openings. Preheat, interpass temperature control, and postheat treatment of welds shall be as required by ANSI Piping documents, unless otherwise indicated or specified. Describe the type of backing rings or consumable inserts, if used, and, if they are to be removed, the removal process. Welding procedure qualifications shall be identified individually and referenced on the shop drawings or suitably keyed to the contract drawings.

1.5.4 Welder and Welding Operator Performance Qualification

Qualify each welder and welding operator assigned to work covered by this specification by performance tests using equipment, positions, procedures, base metals, and electrodes or bare filler wires from the same specification, classification, or group number that will be encountered on his assignment. Welders or welding operators who make acceptable procedure qualification tests will be considered performance-qualified for the welding procedure used. Determine performance qualification in accordance with ASME BPVC SEC IX, ANSI Piping Standards ASME B31.3 and as specified.

1.5.5 Renewal of Qualification

Requalification of a welder or welding operator shall be required under one or any combination of the following conditions:

a. When a welder or welding operator has not used the specific welding process for a period of 3 months. The period may be extended to 6 months if the welder has been employed on another welding process.

b. There is specific reason to question the welder's ability to make welds that will meet the requirements of the specifications.

c. The welder or welding operator was qualified by an employer other than those firms performing work under this contract and a qualification test has not been taken within the preceding 12 months. Renewal of qualification under this condition need be made on only a single test joint or pipe of any thickness, position, or material to reestablish qualification for any thickness, position, or material for which the welder or welding operator had qualified previously.

1.5.6 Qualification of Inspection and (NDE) Personnel

Qualification of Inspection and Nondestructive Examination (NDE) Personnel: Qualify inspection and nondestructive examination personnel in accordance with the following requirements:

1.5.6.1 Inspector Certification

Qualify welding inspectors in accordance with AWS QC1.

1.5.6.2 NDE Personnel Certification Procedures

Certify NDE personnel and establish a written procedure for the control and administration of NDE personnel training, examination, and certification. Base procedures on appropriate specific and general guidelines of training and experience recommended by ASNT SNT-TC-1A, Supplement B-Magnetic particle, Supplement C-Ultrasonic, and Supplement D-Liquid Penetrant.

1.5.6.3 Welding Procedures and Qualifications

a. Specifications and Test Results: Submit copies of the welding procedure specifications and procedure qualification test results for each type of welding required. Approval of any procedure does not relieve the Contractor of the responsibility for producing acceptable welds. Submit this information on the forms printed in ASME BPVC SEC IX or their equivalent.

b. Certification: Before assigning welders or welding operators to the work, submit their names, together with certification that each individual is performance qualified as specified. Do not start welding work prior to procedure qualification. The certification shall state the type of welding and positions for which each is qualified, the code and procedure under which each is qualified, date qualified, and the firm and individual certifying the qualification tests.

1.5.7 Symbols

Conform to AWS A2.4.

1.5.7.1 Weld Identifications

Submit a list of the welders' names and symbol for each welder. To identify welds, submit written records indicating the location of welds made by each welder or welding operator.

1.5.8 Safety

Conform to AWS Z49.1, 29 CFR 1910-SUBPART Q, "Welding, Cutting, and Brazing," 29 CFR 1926-SUBPART J, "Welding and Cutting."

1.6 ENVIRONMENTAL

Do not perform welding when the quality of the completed weld could be impaired by the prevailing working or weather conditions. The Contracting Officer will determine when weather or working conditions are unsuitable for welding.

1.7 DELIVERY AND STORAGE

Deliver filler metals, electrodes, fluxes and other welding materials to the site in manufacturers' original packages and store in a dry space until used. Label and design packages properly to give maximum protection from moisture and to assure safe handling.

PART 2 PRODUCTS

2.1 WELDING MATERIALS

Comply with ASME BPVC SEC II-C. Welding equipment, electrodes, welding wire, and fluxes shall be capable of producing satisfactory welds when used by a qualified welder or welding operator using qualified welding procedures.

PART 3 EXECUTION

3.1 WELDING

Do not deviate from applicable codes, approved procedures and approved shop drawings without prior written approval from the Contracting Officer. Materials or components with welds made off the site will not be accepted if the welding does not conform to the requirements of this specification unless otherwise specified. Assign each welder or welding operator an identifying number, letter, or symbol that shall be used to identify his welds. Each welder or welding operator shall apply his mark adjacent to his weld using an approved rubber stamp or felt-tipped marker with permanent, weatherproof ink or other approved methods that do not deform the metal. For seam welds, place identification marks adjacent to the welds at 3 foot intervals. Confine identification by die stamps or electric etchers to the weld reinforcing crown, preferably in the finished crater.

3.2 WELDING OPERATORS

Perform welding in accordance with qualified procedures using qualified welders and welding operators.

3.3 SUPPORTS

Welding of hangers, supports, and plates to structural members shall conform to AWS D1.1/D1.1M.

3.4 EXAMINATIONS AND TESTS

Visual and nondestructive examinations shall be performed by the Contractor to detect surface and internal discontinuities in completed welds. Employ the services of a qualified commercial inspection or testing laboratory or technical consultant approved by the Contracting Officer. Visually examine welds Liquid penetrant, Magnetic particle, or Ultrasonic examination shall be required or in accordance with other sections where detailed requirements are specified. Random NDE testing applies to ASME B31.3 and ASME B31.4 piping unless specified otherwise. When examination and testing indicates defects in a weld joint, a qualified welder shall repair the weld in accordance with the paragraph entitled "Corrections and Repairs" of this section.

3.4.1 Random NDE Testing

When liquid penetrant, magnetic particle, or ultrasonic examination is required, test a minimum of 10 percent of the total length or number of piping welds. Randomly select the welds examined, but include an examination of welds made by each welding operator or welder. If random testing reveals that a weld fails to meet minimum quality requirements, examine an additional 10 percent of the welds in that same group. If the additional welds examined meet the quality requirements, the entire group of welds represented shall be accepted and the defective welds shall be repaired. If any of the additional welds examined also fail to meet the quality requirements, that entire group of welds shall be rejected. Remove and reweld rejected welds or examine rejected welds 100 percent and remove and reweld defects.

3.4.2 Visual Examination

Visually examine welds as follows:

a. Before welding -- for compliance with requirements for joint preparation, placement of backing rings or consumable inserts, alignment and fit-up, and cleanliness.

b. During welding -- for conformance to the qualified welding procedure.

c. After welding -- for cracks, contour and finish, bead reinforcement, undercutting, overlap, and size of fillet welds.

3.4.3 Nondestructive Examination

NDE shall be in accordance with written procedures. Procedures for liquid penetrant, magnetic particle, or ultrasonic tests and methods shall conform to ASME BPVC SEC V. The approved procedure shall be demonstrated to the satisfaction of the Contracting Officer's QA personnel. In addition to the information required in ASME BPVC SEC V, the written procedures shall include:

a. Timing of the nondestructive examination in relation to the welding operations.

b. Safety precautions.

3.4.4 Examinations and Tests by the Government

Examinations and tests will conform to paragraphs "Visual Examination" and "Nondestructive Examination" of this section, except that destructive tests may be required also. When destructive tests are made, qualified welders or welding operators shall make repairs using welding procedures which will develop the full strength of the members cut. Welding shall be subject to examination and tests in the mill, shop, and field.

3.5 ACCEPTANCE STANDARDS

3.5.1 Visual

The following indications are unacceptable:

a. Cracks--external surface.

b. Undercut on surface which is greater than 1/32 inchdeep provided that the remaining wall thickness is not less than the minimum design thickness.

c. Weld reinforcement:

(1) ASME B31.1, conform to Table I.

TABLE I REINFORCEMENT OF GIRTH AND LONGITUDINAL BUTT WELDS			
	Maximum Thickness of Reinforcement for Design Temperature		
Thickness of Base Metal, inches	Greater than 750 degrees F	350 degrees F - 750 degrees F	Less than 350 degrees C
	inch	inch	inch
Up to 1/8, incl.	1/16	3/32	3/16
Over 1/8 to 3/16, incl.	1/16	1/8	3/16
Over 3/16 to 1/2, incl.	1/16	5/32	3/16
Over 1/2 to 1, incl.	3/32	3/16	3/16
Over 1 to 2, incl.	1/8	1/4	1/4
Over 2	5/32	The greater of 1/4 inch or 1/8 times the width of the weld in inches.	
NOTES:			
1. For double welded butt joints, this limitation on reinforcement given above shall apply separately to both inside and outside surfaces of the joint.			
2. For single welded butt joints, the reinforcement limits given above shall apply to the outside surface of the joint only.			
3. The thickness of weld reinforcement shall be based on the thickness of the thinner of the materials being joined.			
4. The weld reinforcement thicknesses shall be determined from the higher of the abutting surfaces involved.			
5. Weld reinforcement may be removed if so desired.			

(2) ASME B31.3, conform to Table II.

TABLE II	
Wall Thickness, inches	Height, inches
Less than or equal to 1/4	Less than or equal to 1/16

TABLE II	
Wall Thickness, inches	Height, inches
Greater than 1/4, is less than or equal to 1/2	Less than or equal to 1/8
Greater than 1/2, is less than or equal to 1	Less than or equal to 5/32
Greater than 1	Less than or equal to 3/16
NOTES:	
1. Wall thickness is the nominal wall thickness of the thinner of components joined by butt weld.	
2. Height: For "Normal Service" and "Severe Cyclic" conditions, use the listed value. For "Category D Fluid Service," use twice the listed value. Measure from surfaces of adjacent components. The lesser of the two measurements, in any plane through the weld, shall not exceed the applicable value at right. Weld metal shall merge smoothly into component surfaces.	

(3) ASME B31.4, conform to Table I for under 350 degrees F.

(4) ASME B31.5, conform to Table III.

TABLE III	
Pipe Wall Thickness, inches	Reinforcement Thickness, inches
1/4 and under	1/16
Over 1/4 through 1/2	3/32
Over 1/2, through 1	1/8
Over 1	3/16

(5) ASME B31.9: Thickness of weld reinforcement shall not exceed 3/16 inch.

d. Lack of fusion on surface.

e. Incomplete penetration (applies only when inside surface is readily accessible).

f. Convexity of fillet weld surface greater than 10 percent of longest leg plus 0.03 inch.

g. Concavity in groove welds.

h. Concavity in fillet welds greater than 1/16 inch.

i. Fillet weld size less than indicated or greater than 1 1/4 times the minimum specified fillet leg length.

3.5.2 Magnetic Particle Examination

The following relevant indications are unacceptable:

a. Any cracks and linear indications.

b. Rounded indications with dimensions greater than 3/16 inch.

c. Four or more rounded indications in a line separated by 1/16 inch or less edge-to-edge.

d. Ten or more rounded indications in any 6 square inches of surface, with the major dimension of this area not to exceed 6 inches, with the area taken in the most unfavorable location relative to the indications being evaluated.

3.5.3 Liquid Penetrant Examination

Indications whose major dimensions are greater than 1/16 inch shall be considered relevant. The following relevant indications are unacceptable:

a. Any cracks or linear indications.

b. Rounded indications with dimensions greater than 3/16 inch.

c. Four or more rounded indications in a line separated by 1/16 inch or less edge-to-edge.

d. Ten or more rounded indications in any 6 square inches of surface, with the major dimension of this area not to exceed 6 inches, with the area taken in the most unfavorable location relative to the indications being evaluated.

3.5.4 Radiography

Welds that are shown by radiography to have any of the following discontinuities are unacceptable:

a. Any type of crack or zone of incomplete fusion or penetration.

b. Any other elongated indication which has a length greater than:

(1) 1/4 inch for t up to 3/4 inch, inclusive;

(2) 1/3 t for t from 3/4 inch to 2 1/4 inches, inclusive;

(3) 3/4 inch for t over 2 1/4 inches where t is the thickness of the thinner portion of the weld.

("t" pertains to the thickness of the weld being examined. If a weld joins two members having different thickness at the weld, "t" is the thinner of these two thicknesses.)

c. Any group of indications in line that have an aggregate length greater than t in a length of 12t, except where the distance between the

successive indications exceeds 6L where L is the longest indication in the group.

d. Porosity in excess of that shown acceptable in Appendix A-250, Acceptance Standard for Radiographically Determined Rounded Indications in Welds, ASME BPVC SEC I.

3.5.5 Ultrasonic Examination

Permitted for ASME B31.3 and ASME B31.4 piping only. Linear type discontinuities are unacceptable if the amplitude exceeds the reference level and discontinuities have lengths which exceed the following:

a. 1/4 inch for t up to 3/4 inch

b. 1/3 t for t from 3/4 inch to 2 1/4 inches

c. 3/4 inch for t over 2 1/4 inches

("t" is the thickness of the weld being examined. If the weld joins two members having different thickness at the weld, "t" is the thinner of these two thicknesses. Discontinuities are interpreted to be cracks, lack of fusion, and incomplete penetration are unacceptable regardless of length.)

3.6 CORRECTIONS AND REPAIRS

Remove defects and replace welds as specified in ANSI Piping Standards , unless otherwise specified. Repair defects discovered between weld passes before additional weld material is deposited. Wherever a defect is removed, and repair by welding is not required, the affected area shall be blended into the surrounding surface eliminating sharp notches, crevices, or corners. After defect removal is complete and before rewelding, reexamine the area by the same test methods which first revealed the defect to ensure that the defect has been eliminated. After rewelding, reexamine the repaired area by the same test methods originally used for that area. For repairs to base material, the minimum examination shall be the same as required for butt welds. Indication of a defect shall be regarded as a defect unless reevaluation by NDE or by surface conditioning shows that no unacceptable indications are present. The use of foreign material to mask, fill in, seal, or disguise welding defects will not be permitted.

TABLE IV - EXAMINATIONS AND TESTS FOR VARIOUS MATERIALS AND SERVICES				
	Examinations or Tests Required			
Material or Application	Visual	Radiographic	Magnetic Particle or Liquid Penetrant	Ultrasonic
High-alloy austenitic or nickel steels or nickel alloys for cryogenic service and vacuum service				
a. Tack welds	Yes	No	No No	
b. Root passes	Yes	No	Yes No	

TABLE IV - EXAMINATIONS AND TESTS FOR VARIOUS MATERIALS AND SERVICES				
		Examinations or Tests Required		
Material or Application	Visual	Radiographic	Magnetic Particle or Liquid Penetrant	Ultrasonic
c. Intermediate passes	Yes	No	No No	
d. Completed weld	Yes	100 percent for NPS over 1-1/4 inches 60 percent for NAPA PS 1-1/4 inches and less	Yes(PT only); 1/2 inch and over	Yes for wall thickness
High-alloy austenitic or nickel steels or nickel alloys for other than cryogenic or vacuum service				
a. Tack welds	Yes	No	No No	
b. Root passes	Yes	No	NoYes	No
c. Intermediate passes	Yes	No	No No	
d. Completed weld	Yes	100 percent	Yes (PT only)	No Yes
Stainless steel to carbon steel				
a. Completed weld	Yes	No Yes Random	Yes (PT only)	No
Carbon steel piping systems				
a. Tack welds	Yes	No	No	No
b. Root passes	Yes	No	No Yes MT	No
c. Intermediate passes	Yes	No	No	No

TABLE IV - EXAMINATIONS AND TESTS FOR VARIOUS MATERIALS AND SERVICES				
	Examinations or Tests Required			
Material or Application	Visual	Radiographic	Magnetic Particle or Liquid Penetrant	Ultrasonic
d. Completed weld	Yes	100 percent	No Yes MT	No

TABLE V - MANDATORY MINIMUM NONDESTRUCTIVE EXAMINATIONS FOR ASME B31.1 PIPING			
	Temperatures over 750 degrees F and at all pressures.	Temperatures between 350 degrees F and 750 degrees F inclusive and at all pressures over 1052 psig gage	All others
Buttwelds (Girth and Longitudinal)	RT for NPS over 2 inches MT or PT for NPS 2 inches and less.	RT for over 2 inch NPS with thickness over 3/4 inch. Visual for all sizes with thickness 3/4 inch or less.	Visual for all sizes and thicknesses.
Welded Branch Connections (Size indicated is Branch Size)	RT for NPS over 2 inch MT or PT for NPS 2 inch and less.	RT for branch over 4 inch NPS and thickness of branch over 3/4 inch. Visual for all sizes with branch thickness 3/4 inch or less.	Visual for all sizes and thicknesses.
Fillet, Socket Welds	PT or MT for all sizes and thicknesses.	Visual for all sizes and thicknesses.	Visual for all sizes and thicknesses.
NOTES:			

TABLE V - MANDATORY MINIMUM NONDESTRUCTIVE EXAMINATIONS FOR ASME B31.1 PIPING			
	Temperatures over 750 degrees F and at all pressures.	Temperatures between 350 degrees F and 750 degrees F inclusive and at all pressures over 1052 psig gage	All others
1. Thickness refers to pressure boundary wall thickness (such as pipe wall, fitting wall, or nozzle wall thickness).			
2. All welds must be given a visual examination in addition to type of specific nondestructive examination specified.			
3. NPS-Nominal Pipe Size.			
4. RT-Radiographic examination; MT-magnetic particle examination; PT-liquid penetrant examination.			
5. RT of branch welds shall be performed before any nonintegral reinforcing material is applied.			
6. The thickness of buttwelds is defined as the thicker of the two abutting ends after end preparation.			
7. Temperatures and pressures shown are design.			
8. In lieu of radiography of welded branch connections when required above, liquid penetrant or magnetic particle examination is acceptable and, when used, shall be performed at the lesser of one-half of the weld thickness or each 1/2 inch of weld thickness and all accessible final weld surfaces.			
9. For nondestructive examination of the pressure retaining component, refer to the standards listed in applicable code or the manufacturing specifications.			

-- End of Section --

SECTION 40 95 00

PROCESS CONTROL
10/07

PART 1 GENERAL

1.1 REFERENCES

The publications listed below form a part of this specification to the extent referenced. The publications are referred to within the text by the basic designation only.

AMERICAN SOCIETY OF HEATING, REFRIGERATING AND AIR-CONDITIONING ENGINEERS (ASHRAE)

ASHRAE FUN IP	(2013; Addenda and Corrigendum 2013) Fundamentals Handbook, I-P Edition

ASME INTERNATIONAL (ASME)

ASME B31.8	(2014; Supplement 2014) Gas Transmission and Distribution Piping Systems

INSTITUTE OF ELECTRICAL AND ELECTRONICS ENGINEERS (IEEE)

IEEE C37.90	(2005; R 2011) Standard for Relays and Relay Systems Associated With Electric Power Apparatus
IEEE C62.41.1	(2002; R 2008) Guide on the Surges Environment in Low-Voltage (1000 V and Less) AC Power Circuits
IEEE C62.41.2	(2002) Recommended Practice on Characterization of Surges in Low-Voltage (1000 V and Less) AC Power Circuits
IEEE Stds Dictionary	(2009) IEEE Standards Dictionary: Glossary of Terms & Definitions

NATIONAL ELECTRICAL MANUFACTURERS ASSOCIATION (NEMA)

ANSI C12.1	(2008) Electric Meters Code for Electricity Metering
NEMA 250	(2014) Enclosures for Electrical Equipment (1000 Volts Maximum)
NEMA ICS 1	(2000; R 2015) Standard for Industrial Control and Systems: General Requirements
NEMA ICS 2	(2000; R 2005; Errata 2008) Standard for Controllers, Contactors, and Overload Relays Rated 600 V
NEMA ICS 4	(2015) Terminal Blocks

NATIONAL FIRE PROTECTION ASSOCIATION (NFPA)

NFPA 70	(2014; AMD 1 2013; Errata 1 2013; AMD 2 2013; Errata 2 2013; AMD 3 2014; Errata 3-4 2014; AMD 4-6 2014) National Electrical Code

NATIONAL INSTITUTE OF STANDARDS AND TECHNOLOGY (NIST)

NIST SP 250	(1991) Calibration Services Users Guide

UNDERWRITERS LABORATORIES (UL)

UL 1059	(2001; Reprint Oct 2011) Standard for Terminal Blocks
UL 508	(1999; Reprint Oct 2013) Industrial Control Equipment

1.2 DEFINITIONS

Definitions, Symbols, and engineering unit abbreviations shall conform to IEEE Stds Dictionary, as applicable.

1.3 SUBMITTALS

Government approval is required for submittals with a "G" designation; submittals not having a "G" designation are for Contractor Quality Control approval. Submit the following in accordance with Section 01 33 00 SUBMITTAL PROCEDURES:

SD-02 Shop Drawings

Installation G

Wiring G

SD-03 Product Data

Control Drawings

Submit in booklet form, indexed to the unique identifiers, consisting of data sheets that document compliance with the specification. Where multiple components are shown on a catalog cut, mark the application specific component.

Sensors and Meters

Performance Verification Test (PVT)

SD-06 Test Reports

Performance Verification Test(PVT)

SD-10 Operation and Maintenance Data

Training Manual; G

Instrumentation and Control System; G

PART 2 PRODUCTS

2.1 SYSTEM DESCRIPTION

The process instrumentation and control system shall be used to monitor and control the operation of process equipment as specified and in accordance with the sequence of control and control schematics shown on the drawings. The control system shall provide for operator interaction, overall control system supervision, and process equipment control and monitoring. Provide hardware configured and sized to support expansion as specified and shown on the drawings.

2.1.1 General Requirements

The control system must consist of the existing control equipment, the new sensors and actuators installed as part of this project and software modifications to adapt the control system to the new equipment and form a fully functional system.

2.1.2 Operation

The control system provided under this specification shall operate using direct digital control (DDC) algorithms or ladder logic type and supervisory control to provide the required sequences of operation. Input data to the controller shall be obtained by using instruments and controls interfaced to mechanical, electrical, utility systems and other systems as shown and specified. All required setpoints, settings, alarm limits, and sequences of operation shall be as identified in the drawings andsequences of operation indicated. The number and location of control panels shown on drawings shall be provided as a minimum.

2.1.3 Points

Provide inputs to and outputs from the control system in accordance with the Input/Output (I/O) Summary drawings indicated. Each connected analog output (AO), analog input (AI), digital output (DO), digital input (DI), pulse accumulator (PA) input and other input or output device connected to the control system shall represent a "point" where referred to in this specification.

2.2 MATERIALS AND EQUIPMENT

2.2.1 Standard Products

Materials and equipment must be standard unmodified products of a manufacturer regularly engaged in the manufacturing of such products. Units of the same type of equipment shall be products of a single manufacturer. Items of the same type and purpose shall be identical and supplied by the same manufacturer, unless replaced by a new version approved by the Government.

2.2.2 Nameplates

Each major component of equipment shall have the manufacturer's name and address, and the model and serial number in a conspicuous place. Laminated plastic nameplates shall be provided for equipment devices and panels furnished. Each nameplate shall identify the device, such as pump "P-1" or valve "VLV-402". Labels shall be coordinate with the schedules and the process and instrumentation drawings. Laminated plastic shall be 1/8 inch thick, white with black center core. Nameplates shall be a minimum of 1 by 3 inches with minimum 1/4 inch high engraved block lettering. Nameplates for devices smaller than 1 by 3 inches shall be attached by a nonferrous metal chain. All other nameplates shall be attached to the device.

2.3 GENERAL REQUIREMENTS

Equipment located outdoors, not provided with climate controlled enclosure, shall be capable of operating in the ambient temperature range of the site . Equipment and wiring must be in accordance with NFPA 70, with proper consideration given to environmental conditions such as moisture, dirt, corrosive agents, and hazardous area classification.

2.4 MONITORING AND CONTROL PARAMETERS

The control system shall be complete including sensors, field preamplifiers, signal conditioners, offset and span adjustments, amplifiers, transducers, transmitters, control devices, engineering units conversions and algorithms for the applications; and shall maintain the specified end-to-end process control loop accuracy from sensor to display and final control element. Control equipment shall be powered by a 120 vAc, single phase, 60 Hz power source, with local transformers included as needed for signal transmission and subsystem operation. Connecting conductors shall be suitable for installed service. Enclosures shall be rated for NEMA.

2.4.1 Transmitter

Unless indicated otherwise, each sensor shall be provided with a transmitter, selected to match the sensor. Except where specifically indicated otherwise on the drawings, the transmitter shall be provided with a four digit or analog visual display of the measured parameter and shall provide a 4 to 20 mAdc output signal proportional to the level of the measured parameter. Accuracy shall be plus or minus 0.5 percent of full scale reading with output error not exceeding plus or minus 0.5 percent of full scale. Transmitter shall be located where indicated, mounted integrally with the sensor, pipe mounted, wall mounted or installed in the control panel. The distance between the sensor and transmitter shall not exceed the manufacturer's recommendation. Field

preamplifiers and signal conditioners shall be included when necessary to maintain the accuracy from sensor to the programmable logic controller or recorder.

2.4.2 Off-Gas or Vapor Service

Sensors and meters in natural gas service shall be rated for continuous duty service at fluid approach velocities from 500 to 5000 fpm with correspondingly higher constriction velocities over a fluid temperature range from minus 15 degrees F to 120 degrees F at pressures from minus 7.2 psi gage up to 100 psi gage.

2.4.3 Liquid Service

Sensors and meters in liquid service shall be rated for continuous duty service at fluid approach velocities from 0.327 ft/s to 10 ft/s with correspondingly higher constriction velocities over a fluid temperature range from 32 degrees F to 250 degrees F at pressures up to 300 psi gage.

2.4.4 Flow Sensor

Liquid flow indication shall be provided in gpm. Natural gas flow indication shall be provided in cubic feet per minute. Pressure taps shall incorporate appropriate snubbers. Unless indicated otherwise, the flow transmitter shall produce a signal that is proportional to the volumetric flow rate, compensated for fluid temperature, and shall have an accuracy of plus or minus 0.5 percent of full flow. Flow transmitter shall be located within 15 feet of the flow element. The flow transmitter shall include a digitalreadout of the volumetric flow rate to 3 significant figures.

2.4.4.1 Flow Nozzle

Flow nozzle shall be made of austenitic stainless steel. The inlet nozzle form shall be elliptical and the nozzle throat shall be the quadrant of an ellipse. The thickness of the nozzle wall and flange shall be such that the accuracy will not be degraded by distortion of the nozzle throat from strains caused by the pipeline temperature and pressure, flange bolting, or other methods of installing the nozzle in the pipeline. The outside diameter of the nozzle flange or the design of the flange facing shall be such that the nozzle throat shall be centered accurately in the pipe.

2.4.4.2 Flow Switch

Flow switch shall have a repetitive accuracy of plus or minus 10 percent of actual flow setting. Switch actuation shall be adjustable over the operating flow range. Flow switch for use in fuel oil or Natural gas system shall be rated for use and constructed of suitable materials for installation in the environment encountered. The flow switch shall have non flexible paddle with Form C snap action contacts, rated in accordance with NEMA ICS 1.

2.4.4.3 Magnetic Flowmeter

Magnetic flowmeter shall be non-intrusive and shall measure fluid flow through the use of a self generated magnetic field. The magnetic flow element shall be encapsulated in type 300 stainless steel. Flowmeter shall be capable of measuring clean or dirty flow up to a maximum flow velocity of 10 fps. The metering tube shall be constructed of 316

stainless steel. The maximum pressure drop across the meter and appurtenances shall be 5 psi at the maximum flow rate.

2.4.4.4 Natural Gas or Propane Flow Meter

Flowmeter for natural gas flows, corrected to standard conditions, shall be of the orifice type with integral differential and temperature transmitter type. Meters shall be designed specifically for natural gas or propane supply metering and rated for the pressure, temperature and flow rates of the installation. Permanent meters shall be suitable for operation in conjunction with an energy monitoring and control system. Meter body shall be constructed of 316 stainless steel. Meter shall have a minimum turndown ratio of 10 to 1 with an accuracy of plus or minus 0.5 percent of actual flow rate. .

2.4.4.5 Orifice Plate

Orifice plate shall be made of 304 or 316 series stainless steel sheet. The outlet side of the bore shall be beveled at a 45 degree angle. The thickness of the cylindrical face of the orifice shall be 0.125 inch nominal. The orifice plate shall be flat within 20 mils. The orifice surface roughness shall not exceed 0.02 mils. Orifice plates shall be concentric plates with a square and sharp upstream edge of the orifice. Orifice bore shall be designed to match the operating parameters stated in the drawings. Plate shall be permanently identified with line size, flange rating, orifice bore diameter, plate thickness and material.

2.4.4.6 Coriolis Flowmeter

Fuel oil flow is to be measured with a Coriolis type flow meter. Sensor accuracy shall be plus or minus 0.5 percent of rate of flow, minimum operating flow velocity shall be 0.5 fps. Sensor repeatability and linearity shall be plus or minus 1 percent. Sensor shall be designed for fuel oil service and having flanged engs. Wetted materials shall be made from non-corrosive materials and shall not contaminate the measured fluid. The sensor shall be provided with isolation valves.

2.4.4.7 Pitot Tube

The air flow velocity sensing element shall be of the pitot tube type. Each transmitter shall have a low range differential pressure sensing element and a square root extractor. Sensing element accuracy shall be plus or minus 1 percent of full scale. Transmitter accuracy shall be plus or minus 0.25 percent of the calibrated measurement. Overall accuracy shall be plus or minus 3 percent over a range of 500 to 2500 fpm scaled to air volume. The resistance to air flow shall not exceed 0.08 inch water at an air flow of 2000 fpm.

2.4.4.8 Annular Pitot Tube

Sensor shall have an accuracy of plus or minus 2 percent of full flow and a repeatability of plus or minus 0.5 percent of measured value. Annular pitot tube shall be averaging type differential pressure sensors with four total head pressure ports and one static port made of austenitic stainless steel. The total head pressure ports shall extend diametrically across the entire pipe or duct.

2.4.4.9 Ultrasonic Flowmeter

Ultrasonic flowmeter shall utilize high frequency Doppler shifttransit-time transducer. Flowmeter shall be capable of measuring flow up to a maximum flow rate of 15 fps.

2.4.4.10 Venturi Tube

Venturi tube shall be made of cast iron or cast steel. The throat section shall be lined with austenitic stainless steel. Thermal expansion characteristics of the lining shall be the same as that of the throat casting material. The surface of the throat lining shall be machined to a plus or minus 50 mils finish, including the short curvature leading from the converging entrance section into the throat. The metering tube shall be rated for continuous duty service at minimum pressure of 250 psi gage.

2.4.4.11 Vortex Shedding Flowmeter

The accuracy shall be within plus or minus 0.8 percent of the actual volumetric flow. The flow meter body shall be made of austenitic stainless steel. Flowmeter shall be rated for continuous duty service at minimum pressure of 250 psi gage. The vortex shedding flowmeter body shall not require removal from the piping in order to replace the shedding sensor.

2.4.5 Level Instrumentation

Pressure taps shall incorporate appropriate snubbers. Relays and housing shall be intrinsically safe or explosion proof as required by the NFPA hazard rating for compatibility with the contents of the tank or sump. The transmitter shall provide a 4-20 mAdc output signal to the programmable logic controller, proportional to the measured parameter. The controller shall be provided with an internal battery to maintain operation for a minimum of 12 hours if power is lost.

2.4.5.1 Capacitance Type Level Sensor

Liquid level sensor shall produce a signal that is proportional to the measured level. Sensor shall be capacitance type. The transmitter shall have non-interacting zero and span adjustments, and shall have an accuracy of plus or minus 0.1 percent of calibrated span. Assemblies shall include wall bracket or mounting plate, austenitic stainless steel rods, stainless steel bolts and corrosion resistant housing.

2.4.6 Pressure Instrumentation

Pressure taps shall incorporate appropriate snubbers. The transmitter shall provide a 4-20 mAdc output signal to the programmable logic controller, proportional to the measured parameter.

2.4.6.1 Pressure Sensor

The sensing element shall be either capsule, diaphragm, bellows, Bourdon tube, or solid state as applicable for the installation. The pressure transducer shall withstand up to 300 percent of rated pressure, with an accuracy of plus or minus 1.0 percent of full scale selected to put the design range of the measured pressure in the middle third of the transducer's range. Pressure shall be measured in psi gage with a range, plus or minus 10 percent of design range and shall be furnished with

display to the nearest 0.145 psi. The transmitter output error shall not exceed 0.1 percent of calibrated span.

2.4.6.2 Pressure Switch

Sensors shall be diaphragm or Bourdon tube and shall be constructed of 316 stainless steel. Pressure switch shall have a repetitive accuracy of plus or minus 5.0 percent of the operating range and shall withstand up to 150 percent of rated pressure. Switch actuation set point shall be adjustable over the operating pressure range with a differential adjustment span of 20 to 40 percent of the range of the switch. The switch shall have Form C snap-action contacts rated in accordance with NEMA ICS 1.

2.4.6.3 Differential Pressure

The sensor/transmitter assembly accuracy shall be plus or minus 2 percent of full scale. The over pressure rating shall be a minimum of 300 percent of the operating pressure. Transmitter shall be suitable for installation with the low pressure connection removed. Transmitters shall provide 4-20 mAdc output signal to the programmable logic controller, proportional to the measured parameter.

2.4.6.4 Differential Pressure Switch

Each switch shall be an adjustable diaphragm, or bellows operated device, with taps for sensing lines for connection of pressure fittings designed to sense fluid pressure. The adjustable differential range shall be a maximum of 0.5 inches water at the low end to a minimum of 50 PSI at the high end. Two Form C contacts rated in accordance with NEMA ICS 1 shall be provided.

2.4.7 Temperature Instrumentation

The controller shall provide a 4-20 mAdc output signal to the programmable logic controller, proportional to the measured parameter.

2.4.7.1 Fluid Temperature Range

All devices must be suitable for process temperatures, which define the exposure of the element, and are described in the table on the drawings. Mercury shall not be used in thermometers.

2.4.7.1.1 Type A Bimetal Thermometer

Direct reading, hermetically sealed, suitable for external adjustment. Accurate within 1 percent of full range. Stainless steel construction. Complete with thermowell.

2.4.7.1.2 Type B Remote Reading Gas/Vapor Thermometer

Direct reading, stainless steelphenolic case designed for panel mounting, complete with armor cable, bulb and ancillary components for complete system. Movementless design, resistant to shock and vibration and free from error created by elevation. Provided with gas operated molecular sieve. Accurate within 1 percent over full range.

2.4.7.2 Resistance Temperature Detector (RTD)

RTD shall be platinum, with an accuracy of plus or minus 0.1 percent at 32 degrees F. RTD shall be encapsulated in stainless steel Series 300.

2.4.7.3 Continuous Averaging RTD

Continuous averaging RTD shall have an accuracy of plus or minus 0.9 degrees F at the reference temperature, and shall be of sufficient length to ensure that the resistance represents an average over the cross-section in which it is installed. The sensor shall have a bendable copper sheath.

2.4.7.4 Temperature Switch

All devices shall be suitable for process temperatures, which define the exposure of the element, and as described in the table shown on the drawings. Temperature switch shall have a repetitive accuracy of plus or minus 1 percent of the operating ranges shown. Switch actuation shall be adjustable over the operating temperature range. The switch shall have Form C snap action contacts, rated in accordance with NEMA ICS 1.

2.4.7.5 Thermowell

Thermowell shall be monel, brass, or copper for use in water lines; wrought iron for measuring flue gases; and austenitic stainless steel for other applications. Calibrated thermowells shall be provided with threaded plug and chain, 2 inch lagging neck and inside diameter insertion neck as required for the application. The thermowell shall include a connection box, sized to accommodate the temperature sensing devise.

2.4.8 Process Analytical Instrumentation

Probes shall be easily removable without interrupting service. Sampling pumps shall be included where necessary or applicable to the sensing device. For sensors integral to the electronic controller the sample may be drawn directly into the sensor or may be drawn through a sample tube. For sensors remotely located the sample may be drawn through a sample tube. Outdoor sample tubes shall be heat traced. Sensor and controller construction shall be suitable for operation in the monitored medium. Systems requiring automated zero and calibration gas or reagents shall be provided with 30 days supply of calibration gas or reagent. The transmitter shall provide a 4-20 mAdc output signal to the programmable logic controller, proportional to the measured parameter. The controller shall be provided with an internal battery to maintain operation for a minimum of 12 hours if power is lost.

2.4.8.1 Combustible Gas

Combustible gas sensor shall be provided with a means to collect representative continuous samples and measure for the presence of explosive vapors. Combustible gas sensor shall be poison resistant. Measuring range shall be from 0 percent of the lower explosive limit (LEL) to 100 percent of the upper explosive limit (UEL). Response time shall be less than 10 seconds to indicate 50 percent LEL when exposed to 100 percent LEL. Zero drift shall be less than 3 percent per year. The sensor shall have a minimum operational life of 1 year. The system shall be provided with 30 days of zero and calibration gas.

2.5 PROGRAMMABLE LOGIC CONTROLLER (PLC)

2.5.1 PLC General Requirements

The existing PLCs shall be retained in service.

2.5.2 Input/Output Characteristics

Each controller shall allow for analog input, analog output, discrete input and discrete output. The number and type of inputs and outputs for the system shall be as shown on the drawings and shall comply with the sequence of control. The system capacity shall include a minimum of 20 percent spare input and output points (no less than two points) for each point type provided. During normal operation, a malfunction in any input/output channel shall affect the operation of that channel only and shall not affect the operation of the CPU or any other channel. Analog input circuits shall be available in 4-20 mA. Discrete input circuits shall be available in 79-132 vAc. All input circuits shall have a minimum optical isolation of 1500 VRMS and shall be filtered to guard against high voltage transients from the externally connected devices. Analog output circuits shall be available in 4-20 mA. Discrete output circuits shall be available in 79-132 vAc. All output circuits shall have a minimum optical isolation of 1500 VRMS and shall be filtered to guard against high voltage transients from the externally connected devices.

2.5.3 Wiring Connections

Wiring connections shall be heavy duty, self lifting, pressure type screw terminals to provide easy wire insertion and secure connections. The terminals shall accept two #14 AWG wires. A hinged protective cover shall be provided over the wiring connections. The cover shall have write-on areas for identification of the external circuits.

2.6 PLC SOFTWARE

All PLC software described in this specification shall be furnished as part of the complete control system.
The PLC configuration software has been provided by AC Technical Services (Charlotte, NC) and is passowrd protected by that company. This softward package and the balance-of-plant configurations are to remain.

Control of the new burners and fans are to be incorporated into the existing control system such that each boiler operates as a fully integrated system is also integrated into the overall plant controls system.

2.6.1 Operating System

Each PLC has been provided with the manufacturer's standard operating system software package, which is to remain in service.

2.6.2 Control Sequences and Control Loops

Specific functions to be implemented are defined in individual system control sequences and database tables shown on the drawings, and shall include, as applicable, the following functions: PI control shall provide proportional control and proportional plus integral control; two position control shall provide control for a two state device by comparing a set point against a process variable and an established dead band; floating

point control shall exercise control when an error signal exceeds a selected dead band, and shall maintain control until the error is within the dead band limits; signal selection shall allow the selection of the highest or lowest analog value from a group of analog values as the basis of control and shall include the ability to cascade analog values so that large numbers of inputs can be reduced to one or two outputs; signal averaging shall allow the mathematical calculation of the average analog value from a group of analog values as the basis of control and shall include the ability to "weight" the individual analog values so that the function output can be biased as necessary to achieve proper control; reset function shall develop an AO based on up to two AIs and one operator specified reset schedule.

2.7 CONTROL PANELS

2.7.1 Components

2.7.1.1 Enclosures

The enclosure for each control panel shall conform to the requirements of NEMA 250 for the types specified. Finish color shall be the manufacturer's standard, unless otherwise indicated. Damaged surfaces shall be repaired and refinished using original type finish. Enclosures for installation in mechanical equipment rooms shall be NEMA Type 12 Enclosures for equipment installed outdoors shall be Type 4 or as shown. Enclosures for installation in a corrosive environment shall be Type 4X and shall be constructed of stainless steel. Painted steel shall not be allowed for use in a corrosive environment. Enclosure shall be provided with a single, continuously hinged exterior door with print pocket, 3-point latching mechanism and key lock and a single, continuously hinged interior door.

2.7.1.2 Standard Indicator Light

Indicator lights shall comply with NEMA ICS 1, NEMA ICS 2 and UL 508. Lights shall be heavy duty, round and shall mount in a 0.875 inch mounting hole. Indicator lights shall be LED type and shall operate at 120 vAc or 24 vDc. Long life bulbs shall be used. Indicator light shall be provided with a legend plate labeled as shown on the drawings. Lens color shall be as indicated on the drawings. Lights shall be push to test (lamp) type.

2.7.1.3 Selector Switches

Selector switches shall comply with NEMA ICS 1, NEMA ICS 2 and UL 508. Selector switches shall be heavy duty, round and shall mount in a 0.875 inch mounting hole. The number of positions shall be as indicated on the drawings. Switches shall be non-illuminated. Switches shall be rated for 600 volts, 10 amperes continuous. Selector switches shall be provided with a legend plate labeled as shown on the drawings. Where indicated or required, dual auxiliary contacts shall be provided for the automatic position to provide position sensing at the central station or workstation. Auxiliary contacts shall be rated for 120 vAc, 1A as a minimum. Where indicated on the drawings, switches shall be key operated. All keys shall be identical.

2.7.1.4 Push Buttons

Push buttons shall comply with NEMA ICS 1, NEMA ICS 2 and UL 508. Push buttons shall be heavy duty, round and shall mount in a 0.875 inch

mounting hole. The number and type of contacts shall be as indicated on the drawings or required by the Sequence of Control. Push buttons shall be rated for 600 volts, 10 amperes continuous. Push buttons shall be provided with a legend plate labeled as shown on the drawings.

2.7.1.5 Relays

Relays shall comply with IEEE C37.90 and derated for altitude above 1,500 m. Relays shall be . Relay coil shall be 120 vAc and shall be provided with matching mounting socket. Power consumption shall not be greater than 3 watts.

2.7.1.6 Terminal Blocks

Terminal blocks shall comply with NEMA ICS 4 and UL 1059. Terminal blocks for conductors exiting control panels shall be two-way type with double terminals, one for internal wiring connections and the other for external wiring connections. Terminal blocks shall be made of bakelite or other suitable insulating material with full deep barriers between each pair of terminals. A terminal identification strip shall form part of the terminal block and each terminal shall be identified by a number in accordance with the numbering scheme on the approved wiring diagrams.

2.7.2 Panel Assembly

Control panels shall be factory assembled and shipped to the jobsite as a single unit. Panels shall be fabricated as indicated and devices shall be mounted as shown or required. Each panel shall be fabricated as a bottom-entry connection point for control system electrical power, control system main air source, control system wiring, control air pneumatic tubing, andcommunications system wiring to other control panels .

2.7.3 Electrical Requirements

Each panel shall be powered by a dedicated 120 volts ac circuit, with a fuse, sized as recommended by the equipment manufacturer, and a disconnect switch located inside the panel. Wiring shall terminate inside the panel on terminal blocks. Electrical work shall be as specified in Section 26 20 00 INTERIOR DISTRIBUTION SYSTEM and as shown on the drawings.

2.7.4 Grounding

Control panel enclosures shall be equipped with a solid copper ground bus or equivalent. The ground bus shall be securely anchored to the enclosure so as to effectively ground the entire structure. Clamp-type terminals sized large enough to carry the maximum expected current shall be provided on the ground bus for grounding cables. Where a definite circuit ground is required, a single wire not less than #10 AWG shall run independently to the panel ground bus and shall be fastened to the ground bus with a bolted terminal lug. Cases of instruments, relays and other devices shall be effectively grounded through the enclosures steel structure unless otherwise indicated. Insulated wiring having a continuous rated current of not less than the circuit fuse rating shall be used for grounding. Grounding terminals of power receptacles shall be solidly grounded to the panel enclosure.

2.7.5 Convenience Outlet

A 120 volt ac, 20 amp, ground fault interruption (GFI) type duplex

convenience outlet shall be provided inside the panel. The outlet circuit shall be separate from the panel power circuit.

2.7.6 Panel Interior Light

Where indicated, control panels shall be provided with a 15 watt LED light. The light shall be operated by a manual on-off switch mounted on the interior door of the enclosure. The light shall be powered by the same circuit as the convenience outlet.

2.7.7 Ventilation System

Where indicated, control panels shall be provided with two single phase, 120 volt ac ventilation fans. Each fan shall supply a minimum of 100 cfm of ventilation air through the enclosure. Each fan shall be provided with a line voltage thermostat. Thermostat setpoints shall be adjustable in a range of 70 to 140 degrees F as a minimum. Each supply and exhaust grille shall contain a filter that is easily removed for cleaning or replacement.

2.8 CENTRAL STATION SOFTWARE

2.8.1 Graphical Operations

2.8.1.1 Graphical User Interface

The existing graphical user interface screens displayted in the control room and at each remote control (Red Lion) panel were provided by ac technical services (Charlotte, NC) and are password protected by that firm. All user interface screens are to be updated to reflect the removal of old operating equipment and installation of the new equipment.

2.8.1.2 Display Information

The central station shall display information necessary to support all requirements specified, including: operator commands; alarm notification; reports; system graphics as specified and as shown, incorporating dynamic data; and curve plotting.

2.8.1.3 System Graphics Implementation

System graphics displays shall be hierarchical displays which integrate dynamic data into the display. System graphics shall reflect actual system configuration. Each system schematic shall be included as a separate display. Different colors, textures, and use of inverted video shall be used for various components and dynamic data. The displays shall include standard and/or custom symbols. A library of callable display symbols containing symbols for all necessary equipment and control devices shall be furnished. Symbols shall conform to ASHRAE FUN IP where applicable. Data associated with a display shall be updated within 5 seconds of the digital status change or the analog change in excess of the analog change differential. Any dynamic data which is not current, due to PLC communications failure, PLC failure, or point out of service, shall be highlighted or flagged.

2.8.1.4 Display Editor

The display editor shall enable the user to create, modify, save and

delete displays and symbols. Within the display shall be dynamic fields. The function of linking the dynamic fields with the database shall be handled by a separate software module which shall be executed automatically as the last step of the database generation and modification procedure.

2.8.1.5 Programming

The software system shall continue to utilize the same applications and programming languages now in operation.

2.8.2 Alarms

The software shall notify an operator of the occurrence of an alarm condition. The control system alarm history shall be stored in an ASCII file and shall be recallable by the operator using the report generator. Alarm messages shall take precedence over other functions. A minimum of the most recent 25 system alarms shall continue to be directly available at the central station computer. Operator acknowledgment of one alarm shall not be considered as acknowledgment of any other alarm nor shall it inhibit reporting of subsequent alarms. Alarm data to be displayed and stored shall include: identification of the alarm; date and time to the nearest second of occurrence; device or sensor type; limit exceeded (if analog); engineering units; current value or status; alarm class; and alarm messages.

2.8.2.1 Digital Alarms

Digital alarms shall be subject to immediate reporting, within the alarm response time, at the central station.

2.8.2.2 Analog Alarms

These alarms shall be subject to immediate reporting, within the alarm response time, at the central station. The control panel analog readings shall be compared to predefined high and low limits, and alarmed to the central station each time a value enters or returns from a limit condition. The program shall automatically change the high or low limits, or both, of any analog point, based on time scheduled operations as specified, allowing for a time interval before the new alarm limit becomes effective. For those applications where setpoint adjustments are made, the alarm limit shall be keyed to a finite deviation traveling with the setpoint.

2.8.2.3 Alarm Messages

A unique message with a field of 60 characters shall be provided for each alarm. Assignment of messages to a point shall be an operator editable function. Secondary messages shall be assignable by the operator for printing to provide further information, such as telephone lists or maintenance functions, and shall be editable by the operator.

2.8.2.4 Alarm Classes

Classes of alarms, which will be identified for each item, include class 1 and class 2 alarm conditions. Class 1 (Critical) shall include display, print, and audible alarm at occurrence and at return-to-normal. Acknowledgment of class 1 alarms by the operator shall be required at occurrence and at return-to-normal. Class 2 (Informational) shall include

display, print, and audible alarm at occurrence and at return-to-normal. No acknowledgment of class 2 alarms is required unless otherwise shown.

2.8.3 Pop-up Note Function

A pop-up note function shall be included with the central station, providing the operator a capability of noting any data which may be associated with alarms or with any other event. A note created by an operator shall be automatically called up when any other workstation calls up the associated point, alarm, or alarm summary. The pop-up note function shall also support free form entry of data which can be used by any workstation operators as general reminders or instructions.

2.8.4 System Reaction

Under system normal heavy load, no more than 2 seconds shall lapse from the time a digital status alarm or analog alarm occurs at a PLC until the change is displayed at the central station . The total system response time from initiation of a control action command to display of the resulting status change shall not exceed 5 seconds under system normal heavy load conditions, assuming a zero response time for operation of the PLC's control device. The alarm printer shall continue to print out all occurrences, including time of occurrence, to the nearest second. All system normal heavy load conditions shall be introduced to the system via AIs and DIs.

2.8.4.1 Occurrence

System normal heavy load conditions are defined as the occurrence throughout the system of a total of three status changes, three digital alarms, three analog high or low limit alarms, and three analog quantity changes within the high and low limits during a single 1-second interval. This number of similar occurrences shall repeat on a continuous basis during successive 1-second intervals for a period of 2 minutes.

2.8.4.2 Location

System normal heavy load conditions, as specified, shall have 50 percent of the changes and alarms, including no less than one of each type, occurring at a single PLC with the remaining changes and alarms distributed among the remaining PLCs.

2.9 FACTORY TEST

The new burner control skids, valve assemblies and related burner hardware shall be tested at the factory prior to shipment. Written notification of planned testing shall be given to the Government at least 21 days prior to testing, and in no case shall notice be given until after the Contractor has received written Government approval of the test procedures.

2.9.1 Factory Test Setup

Assemble and integrate the factory test setup as specified to prove that performance of the system satisfies all requirements of this project, including system communications requirements in accordance with the approved test procedures. The factory test shall take place during regular daytime working hours on weekdays. Equipment used shall be the same equipment that is to be delivered to the site. The factory test

setup shall include the following:

Factory Test	
Burner Assembly	one full burner assembly to verify sensors and actuators
Burner Valve Rack	one assembly to verify sensors and actuatoir, in conjunction with burner and fuel control skid.
Fuel control skid and panel	one skid assembly to verify sensors and actuators, in conjunction with burners and valve rack assembly.

2.9.2 Factory Test Procedure

Test procedures shall define the tests required to ensure that the system meets technical, operational, and performance requirements. The test procedures shall define location of tests, milestones for the tests, and identify simulation programs, equipment, personnel, facilities, and supplies required. Provide for testing all control system capabilities and functions specified and shown. Ccover actual equipment and sequences to be used for the specified project and include detailed instructions for test setup, execution, and evaluation of test results. The test reports shall document results of the tests. Surge testing need not be conducted acceptable documented proof can be provided that such testing has been satisfactorily demonstrated to the Government with identical surge protection applied. The procedures shall include the following:

	Test Procedure
equipment	block diagram
hardware and software	descriptions
commands	operator commands
I/O functions	test database points with failure modes
each type of digital and analog point in the test database	description
test equipment	list
inputs required (I/O point values and status) and corresponding expected results of each set of input values	for each application program
default values	for the application program inputs not implemented or provided for in the contract documents for the application programs to be tested

2.9.3 Factory Test Report

Submit original copies of data produced during the factory test, including results of each demonstration procedure within 7 days after completion of each test. Arrange the report so that commands, responses, and data acquired are correlated to allow logical interpretation of the data.

PART 3 EXECUTION

3.1 EQUIPMENT INSTALLATION REQUIREMENTS

3.1.1 Installation

Install system components and appurtenances in accordance with the manufacturer's instructions and provide necessary interconnections, services, and adjustments required for a complete and operable system. Adjust or replace devices not conforming to the required accuracies. Replace factory sealed devices, rather than adjusting.

a. Install instrumentation and communication equipment and cable grounding as necessary to preclude ground loops, noise, and surges from adversely affecting system operation.

b. Install wiring in exposed areas, including low voltage wiring, in metallic raceways or EMT conduit as specified in Section 26 20 00 INTERIOR DISTRIBUTION SYSTEM. Wiring in air plenum areas installed without conduit shall be plenum-rated in accordance with NFPA 70.

c. Submit detail drawings containing complete piping, wiring, schematic, flow diagrams and any other details required to demonstrate that the system has been coordinated and will properly function as a unit. Piping and Instrumentation (P&ID) drawings (prepared using industry recognized device symbols, clearly defined and describing piping designations to define the service and materials of individual pipe segments and instrument tags employing Instrument Society of America suggested identifiers). Include in the Drawings, as appropriate: product specific catalog cuts; a drawing index; a list of symbols; a series of drawings for each control system using abbreviations, symbols, nomenclature and identifiers as shown; valve schedules; compressed instrument air station schematics and ASME air storage tank certificates for each type and make of compressed instrument air station.

3.1.1.1 Isolation, Penetrations and Clearance from Equipment

Dielectric isolation shall be provided where dissimilar metals are used for connection and support. Penetrations through and mounting holes in the building exteriors shall be made watertight. Holes in concrete, brick, steel and wood walls shall be drilled or core drilled with proper equipment; conduits installed through openings shall be sealed with materials which are compatible with existing materials. Openings shall be sealed with materials which meet the requirements of NFPA 70 and Section 07 84 00 FIRESTOPPING. Installation shall provide clearance for control-system maintenance. Control system installation shall not interfere with the clearance requirements for mechanical and electrical system maintenance.

3.1.1.2 Device Mounting

Devices shall be installed in accordance with manufacturers' recommendations and as shown. Control devices to be installed in piping shall be provided with required gaskets, flanges, thermal compounds, insulation, piping, fittings, and manual valves for shutoff, equalization, purging, and calibration. Any deviations shall be documented and submitted to the Government for approval prior to mounting. Damaged insulation shall be replaced or repaired after devices are installed to match existing work. Damaged galvanized surfaces shall be repaired by touching up with zinc paint.

3.1.1.3 Pneumatic Tubing

Tubing may be run exposed in unfinished areas, such as mechanical equipment rooms. For tubing to be enclosed in concrete, rigid metal or intermediate metal conduit shall be provided. Tubing shall be installed parallel or perpendicular to building walls throughout. Maximum spacing between tubing supports shall be 5 feet. Each tubing system shall be tested pneumatically at 1.5 times the working pressure for 24 hours, with a maximum pressure drop of 5 psig with compressed air supply turned off. Joint leaks shall be corrected by remaking the joint. Caulking of joints will not be permitted. Tubing and two insulated copper phone wires for installation checkout may be run in the same conduit. Tubing and electrical power conductors shall not be run in the same conduit; however, control circuit conductors may be run in the same conduit as polyethylene tubing.

3.1.2 Sequences of Operation

Study the operation and sequence of local equipment controls, as a part of the conditions report, and note any deviations from the described sequences of operation on the contract drawings. Perform necessary adjustments to make the equipment operate in an optimum manner and shall fully document changes made.

3.2 INSTALLATION OF EQUIPMENT

Install equipment as specified, as shown and as required in the manufacturer's instructions for a complete and fully operational control system.

3.2.1 Control Panels

Control panels shall be located as indicated on the drawings. Devices located in the control panels shall be as shown on the drawings or as needed to provide the indicated control sequences.

3.2.2 Flow Measuring Device

Fluid flow instruments shall be installed in accordance with manufacturer's recommendations, unless otherwise indicated in the specification. The minimum straight unobstructed piping for the flowmeter installation shall be 10.0 pipe diameters upstream and 5.0 pipe diameters downstream. Meters for gases and vapors shall be installed in vertical piping, and meters for liquids shall be installed in horizontal piping, unless otherwise recommended by the manufacturer or indicated in the specifications.

3.2.2.1 Flow Nozzle

Flow nozzles flanges shall be installed so that the pressure taps are in a horizontal plane with the centerline of the pipe. Flow nozzles shall be installed for ease of accessibility for periodic maintenance. Differential pressure sensors shall be installed as close to the flow nozzle as possible.

3.2.2.2 Flow Switch

Flow switches shall be installed in such a manner as to minimize disturbance of the flow of fluid while maintaining reliable operation of the switch.

3.2.2.3 Magnetic Flowmeter

Meter shall be installed in vertical piping so that the flow tube remains full of the process fluid under all operating conditions. A minimum of five pipe diameters straight run upstream of the flowmeter and two pipe diameters straight run downstream of the flowmeter shall be provided.

3.2.2.4 Natural Gas or Propane Flowmeter

Meters shall be installed in accordance with ASME B31.8. Permanent gas meters shall be installed with provisions for isolation and removal for calibration and maintenance, and shall be suitable for operation in conjunction with an energy monitoring and control system.

3.2.2.5 Orifice Plates

Orifice plates shall be installed for ease of accessibility for periodic maintenance. Differential pressure sensors shall be as close to the orifice plates as possible. Orifice plates for liquid measurement shall be located in horizontal pipe runs with the orifice plate flanges installed so that the pressure taps are in the horizontal plane with the centerline of the pipe. For liquid, the differential pressure transmitter shall be installed below the orifice taps. For gas measurement, the orifice plate flanges shall be installed so that the pressure taps are 45 degrees or more above the horizontal plane with the centerline of the pipe. For gas measurement the required differential pressure transmitter shall be physically installed above the orifice taps.

3.2.2.6 Paddle Flowmeter

Meter shall be installed using manufacturer's published procedures. Installers shall be trained for such installations in the pipes encountered. Provide certificates demonstrating installer's qualifications.

3.2.2.7 Annular Pitot Tubes

Annular pitot tubes shall be installed so that the total head pressure ports are set-in-line with the pipe axis upstream and the static port facing downstream. The total head pressure ports shall extend diametrically across the entire pipe. Annular pitot tubes shall not be used where the flow is pulsating or where pipe vibration is allowed.

3.2.2.8 Ultrasonic Flowmeter

Meter shall be installed using manufacturer's published procedures for installation. Installers shall be trained for such installations in the pipes encountered. Provide certificates demonstrating installer's qualifications.

3.2.2.9 Variable Area Flowmeter

Meters shall be installed in a vertical piping section with full flow through the meter.

3.2.2.10 Venturi Flowmeter

The flowmeter shall be installed with its top above the pipeline in horizontal pipe run installations. The direction of flow shall be upward in vertical pipe run installations. The flowmeter shall be aligned to the direction of the flow and shall be rigidly mounted and vibration free. The minimum straight unobstructed piping for the flow meter installation shall be 10 pipe diameters upstream and 5 pipe diameters downstream.

3.2.2.11 Vortex Shedding Flowmeters

The flowmeter shall be installed with its top above the pipeline in horizontal pipe run installations. The direction of flow shall be upward in vertical pipe run installations. The flowmeter shall be aligned to the direction of the flow and shall be rigidly mounted and vibration free. The minimum straight unobstructed piping for the flow meter installation shall be 10 pipe diameters upstream and 5 pipe diameters downstream.

3.2.3 Level Instruments

3.2.3.1 Capacitance Liquid Level Sensors

The sensing probes shall be located close to, and parallel with, the tank or sump wall.

3.2.3.2 Ultrasonic Sensor

Sensor shall be installed vertically in the top of the tank and in accordance with the manufacturer's instructions. Switches shall be accessible for maintenance and calibration. In applications where switches cannot be directly mounted to a tank by the threaded or flanged connection, a mounting bracket shall be provided for connection to the inside tank wall. Sensor shall be positioned to maximize the return echo signal and minimize vessel obstructions in the sensors line of sight. The minimum recommended distance from the tank fill opening and from the side of the tank shall be maintained .

3.2.4 Pressure Instruments

Pressure sensors and pressure transducers shall be verified by calibration. All pressure taps shall incorporate appropriate snubbers. Pressure sensors and pressure switches shall have valves for isolation, venting, and taps for calibration. Pressure switches and pressure transducers installed on liquid or steam lines shall have drains. Pressure transducers, differential pressure sensors and differential pressure switches shall have nulling valves. Pressure switches shall be adjusted to the proper setpoint and shall be verified by calibration. Switch contact ratings and duty shall be selected for the application.

3.2.5 Temperature Instrument Installation

3.2.5.1 RTD

Each RTD shall be installed in a thermowell. Thermowells shall be filled with conductive heat transfer fluid prior to installation of the RTD in the thermowell. RTDs used for space temperature sensing shall include a housing suitable for wall mounting. RTDs used for outside air sensing shall have an instrument shelter or sun shield as shown to minimize solar effects, and shall be mounted to minimize building effects. RTD assemblies shall be readily accessible and installed to allow easy replacement.

3.2.5.2 Temperature Switches

Temperature switches shall be installed as specified for RTDs. Temperature switches shall be adjusted to the proper setpoint and shall be verified by calibration. Switch contact ratings and duty shall be selected for the application.

3.2.5.3 Thermometers and Temperature Sensing Elements

Thermometers and temperature sensing elements installed in liquid systems shall be installed in thermowells.

3.2.5.4 Thermocouples

Each thermocouple shall be installed in a protective tube or in a

thermowell. Thermocouples shall be insulated from ambient temperature effects. Thermocouple wires shall not be installed in the same conduits as power wiring. Thermocouples shall not be used for measuring temperatures below 500 degrees F. Type E thermocouples may be used when the atmosphere is chemically reducing environment. Type K thermocouples may be used when the atmosphere is a chemically oxidizing environment.

3.2.6 Process Analytical Instrumentation

3.2.6.1 Carbon Dioxide Measurement

The controller shall be located in the control panel or other location as shown on the drawings. Where a sample tube is used, the size and maximum length of sample tubing shall be as recommended by the manufacturer. Sample tubing shall be not crimped or kinked.

3.2.6.2 Carbon Monoxide Measurement

Carbon monoxide controller and sensor shall be located as shown on the drawings or as recommended by the manufacturer. The location shall be representative of the area to be monitored. Installation shall be in accordance with the manufacturer's instructions.

3.2.6.3 Combustible Gas Sensor

The sensor and transmitter shall be located as shown or the drawings or as recommended by the manufacturer. The location of the sensor shall be representative of the area to be monitored and shall allow access to the sensor for periodic replacement.

3.2.6.4 NOx Monitor

The controller shall be mounted in the control panel or as otherwise shown. Sensor shall be located in the flue as shown and in accordance with the manufacturer's recommendation. Installation shall prevent all leakage of flue gases at the sensor.

3.2.6.5 Oxygen and Ozone in Air Monitor

The controller shall be mounted in the control panel or as otherwise shown on the drawings. The oxygen sensor shall be located in accordance with the manufacturer's recommendations and as shown on the drawings. High and low alarm settings shall be set as required by the sequence of control. Settings shall be verified through the use of a manufacturer's standard calibration kit.

3.2.7 Electric Power Devices

3.2.7.1 Potential and Current Transformers

Install potential and current transformers in enclosures unless otherwise shown. Current transformer leads shall be shorted when they are not connected to the measurement circuits.

3.2.7.2 Hour Meters

Meters shall be located in the control panel or as otherwise shown. Power to the meter shall be connected to the motor starter auxiliary contacts for pumps, blowers and other motor driven devices. For devices without

motor starters, the meter shall be connected in parallel with the load. Where the meter voltage differs from the metered devices voltage, transformer shall be provided as necessary.

3.2.7.3 Watt-hour Meters

Install watt-hour meters and transducers in enclosures unless otherwise shown.

3.2.7.4 Transducers

Transducers shall be wired in accordance with the manufacturer's instructions, and installed in enclosures.

3.2.7.5 Current Sensing Relays and Current Transducers for Motors

When used to sense meter/fan/pump status, current sensing relays shall be used for applications under 5 hp. Applications over 5 hp shall use a current transducer.

3.2.8 Output Devices

Output devices (transducers, relays, contactors, or other devices) which are not an integral part of the control panel, shall be mounted in an enclosure mounted adjacent to the control panel, unless otherwise shown. Where H-O-A and/or override switches on the drawings or required by the control sequence, the switches shall be installed so that the control system controls the function through the automatic position and other controls work through the hand position.

3.2.9 Enclosures

All enclosure penetrations shall be from the bottom of the enclosure, and shall be sealed to preclude entry of water using a silicone rubber sealant.

3.2.10 Transformers

Transformers for control voltages below 120 vAc shall be fed from the nearest power panel or motor control center, using circuits provided for the purpose. Provide a disconnect switch on the primary side and a fuse on the secondary side. Transformers shall be enclosed in a steel cabinet with conduit connections.

3.3 WIRE, CABLE AND CONNECTING HARDWARE

3.3.1 Metering and Sensor Wiring

Metering and sensor wiring shall be installed in accordance with the requirements of ANSI C12.1, NFPA 70.

3.3.1.1 Power Line Surge Protection

Control panels shall be protected from power line surges. Protection shall meet the requirements of IEEE C62.41.1 and IEEE C62.41.2. Fuses shall not be used for surge protection.

3.4 SOFTWARE INSTALLATION

Load and edit software configurations required for an operational control

system, including databases (for points specified and shown), operational parameters, and system, command, and application programs. Adjust, tune, debug, and commission all software and parameters for controlled systems to assure proper operation in accordance with the sequences of operation and database tables.

3.5 CONTROL DRAWINGS

Control drawings, bound in 11x17 inch notebooks, reproducible, with corresponding CADD files , shall be provided for equipment furnished and for interfaces to equipment at each respective equipment location. Condensed operating instructions explaining preventive maintenance procedures, methods of checking the system for normal safe operation and procedures for safely starting and stopping the system manually shall be prepared in typed form, bound in notebook, reproducible, with corresponding word processor files and supplied with the diagrams. Diagrams and instructions shall be submitted prior to posting. The framed instructions shall be posted before acceptance testing of the system.

3.6 FIELD TESTING AND ADJUSTING EQUIPMENT

Provide personnel, equipment, instrumentation, and supplies necessary to perform site testing. The Government will witness the PVT, and written permission shall be obtained from the Government before proceeding with the testing. Original copies of data produced, including results of each test procedure, during PVT shall be turned over to the Government at the conclusion of each phase of testing prior to Government approval of the test. The test procedures shall cover actual equipment and functions specified for the project.

3.6.1 Testing, Adjusting and Commissioning

After successful completion of the factory test as specified, the Contractor will be authorized to proceed with the installation of the system equipment, hardware, and software modifications. Once the installation has been completed, test, adjust, and commission each control loop and system in accordance with NIST SP 250 and shall verify proper operation of each item in the sequences of operation, including hardware and software. Calibrate field equipment, including control devices, adjust control parameters and logic (virtual) points including control loop setpoints, gain constants, constraints, and verify data communications before the system is placed online. Calibrate each instrumentation device connected to the control system control network by making a comparison between the reading at the device and the display at the workstation, using a standard at least twice as accurate as the device to be calibrated. Check each control point within the control system control network by making a comparison between the control command at the central station and field-controlled device. Deliver trend logs/graphs of all points showing to the Government that stable control has been achieved. Points on common systems shall be trended simultaneously. One log shall be provided showing concurrent samples taken once a minute for a total of 4 hours. One log shall be provided showing concurrent samples taken once every 30 minutes, for a total of 24 hours. Verify operation of systems in the specified failure modes upon Control system network failure or loss of power, and verify that systems return to control system control automatically upon a resumption of control system network operation or return of power. Deliver a report describing results of functional tests, diagnostics, calibrations and commissioning procedures including written certification to the Government that the installed complete system has

been calibrated, tested, adjusted and commissioned and is ready to begin the PVT. The report shall also include a copy of the approved PVT procedure.

3.6.2 Performance Verification Test (PVT)

Submit test procedures for the PVT. The test procedure shall describe all tests to be performed and other pertinent information such as specialized test equipment required and the length of the PVT. The test procedures shall explain, in detail, step-by-step actions and the expected results, to demonstrate compliance with all the requirements of the drawings and this specification. The test procedure shall be site specific and based on the inputs and outputs, required calculated points and the sequence of control. Refer to the actions and expected results to demonstrate that the control system performs in accordance with the sequence of control. Include a list of the equipment to be used during the testing plus manufacturer's name, model number, equipment function, the date of the latest calibration and the results of the latest calibration.

Demonstrate that the completed Control system complies with the contract requirements. All physical and functional requirements of the project including communication requirements shall be demonstrated and shown. Demonstrate that each system operates as required in the sequence of operation. The PVT as specified shall not be started until after receipt of written permission by the Government, based on the written report including certification of successful completion of testing, adjusting and commissioning as specified, and upon successful completion of training as specified. Upon successful completion of the PVT, furnish test reports and other documentation.

3.7 MANUFACTURERS' FIELD SERVICES

Obtain the services of a manufacturer's representative experienced in the installation, adjustment, and operation of the equipment specified. The representative shall supervise the installing, adjusting, and testing of the equipment.

3.8 FIELD TRAINING

Field training oriented to the specific system shall be provided for designated personnel. Furnish a copy of the training manual for each trainee plus two additional copies. Manuals shall include an agenda, the defined objectives for each lesson, and a detailed description of the subject matter for each lesson. Furnish audiovisual equipment and other training supplies and materials. Copies of the audiovisuals shall be delivered with the printed training manuals. The Government reserves the right to videotape training sessions for later use. A training day is defined as 8 hours of classroom instruction, excluding lunchtime, Monday through Friday, during the daytime shift in effect at the training facility. Submit the training manual and schedule to receive approval from the Government at least 30 days before the training.

3.8.1 Preliminary Operator Training

Prior to the start of field testing, preliminary operator training shall be taught at the project site for 2 consecutive training days. Upon completion of this course, each student, using appropriate documentation, should be able to perform elementary operations with guidance and describe the general hardware architecture and functionality of the system. This

course shall include: general system architecture; functional operation of the system, including workstations; operator commands; application programs, control sequences, and control loops; database entry and modification; reports generation; alarm reporting; diagnostics; and historical files.

3.8.2 Additional Operator Training

Following the field testing, additional classroom training for operators shall be taught for 2 consecutive training days; individual instruction sessions of 2 two -hour periods in the morning (or afternoon) of the same weekday for 2 consecutive weeks . Individual instruction shall consist of "hands-on" training under the constant monitoring of the instructor. Classroom training shall include instruction on the specific hardware configuration of the installed control system and specific instructions for operating the installed system. Schedule activities during this period so that the specified amount of time on the equipment will be available for each student. The final session will address specific topics that the students need to discuss and to answer questions concerning the operation of the system. Upon completion of the course, the students should be fully proficient in system operation and have no unanswered questions regarding operation of the installed control system. Each student should be able to start the system, operate the system, recover the system after a failure and describe the specific hardware architecture and operation of the system and be fully proficient in all system operations. Report the skill level of each student at the end of this course.

3.8.3 Maintenance Training

Following the system startup, a minimum period of one training day shall be provided by a factory representative or a qualified Contractor trainer for up to ten designated personnel on maintenance of the equipment. The training shall include: physical layout of each piece of hardware, calibration procedures, preventive maintenance procedures, schedules, troubleshooting, diagnostic procedures and repair instructions.

3.8.4 Specialized Training

Following the maintenance training, a minimum period of one, total training day shall be provided by a factory representative or a qualified Contractor trainer for up to ten people on the input devices.

3.8.4.1 Flow Meter Training

Each type of flow meter installed as part of this project, to include calibration, maintenance and testing of flow elements and transducers, is to be covered in the maintenance and controls training programs.

3.8.4.2 Specialized Sensor Training

Each type of specialized sensor such as installed as part of this project, to include calibration, maintenance and testing of sensing elements and transducers is to be coverd in the maintenance and controls training programs.

3.9 OPERATION AND MAINTENANCE DATA REQUIREMENTS

Outline the step-by-step procedures required for system startup, operation

and shutdown. Include in the instructions layout, wiring and control diagrams of the system as installed, the manufacturer's name, model number, service manual, parts list and a brief description of all equipment and their basic operating features.

List routine maintenance procedures, possible breakdowns and repairs and trouble shooting guides.

-- End of Section --